2040 COMPREHENSIVE PLAN

SURFACE WATER MANAGEMENT PLAN

HENNEPIN COUNTY | MEDINA, MINNESOTA

December 8, 2017

Prepared for:
City of Medina
2052 County Road 24
Medina, MN 55340

WSB PROJECT NO. 2712-94

TABLE OF CONTENTS

TABLE OF CONTENTS

SECTION 1

1. EXECUTIVE SUMMARY

1.1. Local Surface Water Management Plan Purposes

This Local Surface Water Management Plan (Plan) serves as a comprehensive planning document to guide the City of Medina in conserving, protecting, and managing its surface water resources. The City will use the SWMP as a guide to reach goals related to water quality, volume reduction and flood management. The plan meets the requirements of Minnesota Statutes 103B.235, Minnesota Rules 8410, the Elm Creek and Pioneer-Sarah Creek Watershed Management Commissions' Third Generation Watershed Management Plans, Minnehaha Creek Watershed District Comprehensive Water Resources Management Plan, and Minnesota Statue 103B.01. The purposes of the water management programs are to:

- Protect, preserve, and use natural surface and groundwater storage and retention systems;
- Minimize public capital expenditures needed to correct flooding and water quality problems;
- Identify and plan for means to effectively protect and improve surface and groundwater quality;
- Establish more uniform local policies and official controls for surface and groundwater management;
- Prevent erosion of soil into surface water systems;
- Promote groundwater recharge, where beneficial;
- Protect and enhance fish and wildlife habitat and water recreational facilities; and
- Secure the other benefits associated with the proper management of surface and groundwater.

The Medina Surface Water Management Plan addresses these purposes.

1.2. Executive Summary

The Medina Surface Water Management Plan is divided into six sections:

- ***Section 1.0 Executive Summary*** provides background information and summarizes the plan contents.
- ***Section 2.0 Land and Water Resource Inventory*** presents information about the topography, geology, groundwater, soils, land use, public utilities, surface waters, hydrologic system and data, and the drainage system.
- ***Section 3.0 Agency Cooperation*** outlines other governmental controls and programs that affect stormwater management.
- ***Section 4.0 Assessment of Problems and Issues*** presents the City's water management related problems and issues.
- ***Section 5.0 Goals and Policies*** outlines the City's goals and policies pertaining to water management.

- ***Section 6.0 Implementation Program*** presents the implementation program for the City of Medina, which includes defining responsibilities, prioritizing, and listing the program elements.

- ***Section 7.0 Administration*** outlines the continued administration of this plan with respect to plan updates and amendments, as well as annual reporting requirements to MCWD.

To implement this Plan, a coordinated water resource management approach must be used. This approach must utilize various City and watershed management organization personnel having jurisdiction within the City. Listed below is the contact information for personnel and organizations having responsibilities for administering and implementing portions of this Plan:

City of Medina – http://www.ci.medina.mn.us
Steve Scherer
2052 County Road 24
Medina, MN 55340
763-473-8842 – steve.scherer@ci.medina.mn.us

Elm Creek Watershed Management Commission – http://www.elmcreekwatershed.org
Judie Anderson
3235 Fernbrook Lane
Plymouth, MN 55447
763-553-1144 – judie@jass.biz

Minnehaha Creek Watershed District – http://www.minnehahacreek.org
Becky Christopher
15320 Minnetonka Blvd.
Minnetonka, MN 55345
952-471-0590– bchristopher@minnehahacreek.org

Pioneer-Sarah Creek Watershed Management Commission – http://www.pioneersarahcreek.org
Judie Anderson
3235 Fernbrook Lane
Plymouth, MN 55447
763-553-1144 – judie@jass.biz

Metropolitan Council – http://www.metrocouncil.org
Judy Sventek
390 N. Robert Street
St Paul, MN 55101
651-602-1000 – judy.sventek@metc.state.mn.us

SECTION 2

2. LAND AND WATER RESOURCE INVENTORY

2.1. Physical Setting

2.1.1. Topography and Geology

The bedrock beneath Medina is relatively flat, though intermittent ridges run from the center of the City to the southeast and southwest. Medina's bedrock is now buried beneath surficial Quaternary glacial and fluvial deposits. These deposits consist mainly of clayey till in the western half of the City with sandy till dominating the eastern half. Post-glacial organic deposits and pockets of Lacustrine sand and silt from the Des Moines and Grantsburg sublobe deposits are interspersed throughout the City and overlay the till material. The depth to bedrock within the City ranges from about 100 to 400 feet depending on the location within Medina. The Hennepin County Geologic Atlas shows the actual elevation of the bedrock being 650 to 800 feet.

The Tunnel City Group and St. Lawrence bedrock formations lie beneath the City's northwest corner and cover nearly half the municipal area. The formation transitions to a relatively thin band of Jordan Sandstone oriented from northeast to southwest. Much of the bedrock beneath southeastern Medina consists of St. Peter sandstone except for the extreme southeastern corner, from Holy Name Lake to the southern border, where Ordovician Prairie du Chien bedrock group is found. A ridge consisting of Jordan sandstone runs south above this Prairie du Chien formation from Holy Name Lake south to Lake Minnetonka.

The Minnesota Pollution Control Agency's (MPCA) Minnesota Stormwater Manual and other commonly used design guidance documents identify near surface bedrock as a constraint to infiltration practices. Medina's geology is such that bedrock depth constraints to infiltration will not occur.

Additional geological information can be found in the *Geological Atlas of Hennepin County* (Minnesota Geologic Survey, 1989).

Topography varies within the City from nearly level to gently and moderately sloping. The highest elevations range from approximately 1,050 to 1,060 feet (all elevations are mean sea level) at various points in the northwest and center of the City. The lowest elevations range from approximately 940 to 950 feet at points near the eastern edge of Lake Independence and near the Elm Creek crossing at Trunk Highway 55. The City of Medina has contour data that covers the entire City and is based on 2011 LIDAR (Light Detection and Ranging) data.

Medina's stormwater generally flows in five directions. Northeast Medina drains to Elm Creek. Elm Creek flows out of Medina near where Trunk Highway 55 leaves the City. A small watershed in the north central area of Medina drains north to Rush Creek. A majority of western Medina drains west to Lake Independence. A small portion of the northwest corner of Medina drains to Lake Sarah. In its southwest, Medina drains to Painter Creek while southeast Medina drains to Long Lake. Figure 3 provides an overview of drainage patterns within Medina. The City meet the volumes and rates of stormwater identified within the watershed District models

2.1.2. Climate and Precipitation

The climate within the Twin Cities Metropolitan Area is typical of a continental climate. Without

the buffering influence of large bodies of water, cold winters and hot summers predominate. It is generally understood that global climate change has an effect on the Metropolitan Area's local climate. One area where climate change manifests itself is in rainfall intensities and rainfall depths. The Metropolitan Area has seen more intense rainfalls the last two decades and even the average rainfalls seem more intense. The implications are clear:

- Flood control facilities, if designed for the 100-year rainfall, may get larger as the statistical 100-year rainfall gets larger.
- Facilities designed for smaller events, such as infiltration areas and small storm sewer may also get larger as rainfall depths increase for the 1-year to 5-year rainfall events.

The total average annual precipitation in the Metropolitan Area is approximately 30.6 inches. The total average annual snowfall is approximately 54.4 inches. Average monthly temperature, precipitation, and snowfall are shown in Table 2.1.

TABLE 2.1 – AVERAGE MONTHLY CLIMATE DATA, MINNEAPOLIS/ST. PAUL, 1981-2010

Month	Jan	Feb	Mar	Apr	May	Jun	Jul	Aug	Sep	Oct	Nov	Dec	Annual
Mean Daily Temperature (°F)	15.6	20.8	32.8	47.5	59.1	68.8	73.8	71.2	62.0	48.9	33.7	19.7	46.2
Average Precipitation (in.)	0.90	0.77	1.89	2.66	3.36	4.25	4.04	4.30	3.08	2.43	1.77	1.16	30.61
Average Snowfall (in.)	12.2	7.7	10.3	2.4	0.1	0.0	0.0	0.0	0.0	0.6	9.3	11.9	54.4

Source: Minnesota Climatology Working Group

Additional climatological information for the area can be obtained from the Minnesota State Climatology Office at http://www.climate.umn.edu/.

Rainfall frequency estimates are used as design tools in water resource projects. In 2013, the National Oceanic Atmospheric Administration (NOAA) published the Atlas 14 Precipitation-Frequency document that showed an increase in rainfall intensity and design storms from the previous Technical Paper 40 precipitation values. Selected rainfall frequencies for Medina are listed in Table 2.2.

TABLE 2.2 – ATLAS 14 RAINFALL FREQUENCIES

Recurrence Interval (yrs)	24-hr Rainfall Depth (in)
1	2.49
2	2.86
10	4.25
50	6.24
100	7.25

Additional precipitation information for the area can be obtained from the National Oceanic and Atmospheric Administration (NOAA) website at http://hdsc.nws.noaa.gov/

2.1.3.Soils

Because of its preponderance of wetlands, Medina has many soils with little or no infiltration capacity. Hydrologic Soil Groups characterize diverse soils by similar infiltration capacity. Group A soils have the highest infiltration capacity while Group D have the lowest. Generally, infiltration is not an appropriate practice on Hydrologic Soil Group C and D soils.

Group A – These soils have high infiltration rates even when thoroughly wetted. Based on the Minnesota Stormwater Manual, published by the Minnesota Pollution Control Agency (MPCA), the infiltration rates range from 0.8 to 1.63 inches per hour. These soils consist chiefly of deep, well drained to excessively drained sands and gravel. Group A soils have a high rate of water transmission, therefore resulting in a low runoff potential.

Group B – These soils have moderate infiltration rates ranging from 0.3 to 0.45 inches per hour when thoroughly wetted. Group B soils consist of deep moderately well to well drained soils with moderately fine to moderately coarse textures.

Group C – These soils have slow infiltration rates 0.2 inches per hour when thoroughly wetted. Group C have moderately fine to fine texture.

Group D – These soils have very slow infiltration rates ranging from 0 to 0.06 inches per hour when thoroughly wetted. Group D soils are typically clay soils with high swelling potential, soils with high permanent water table, soils with a clay layer at or near the surface, or shallow soils over nearly impervious material.

Figure 4 provides hydrologic soil groupings for soils in Medina. Although the map indicates a significant percentage of Group B soils, historical knowledge indicates that Group C and D are more prominent. Additional information on Medina's soils can be obtained from the Hennepin County Soil Survey.

2.1.4.Land Use

The City's land use practices include agricultural, residential, commercial, industrial, and private and public open spaces. The majority of the City is rural with areas of urban development in the northeast along the Trunk Highway 55 corridor and east of Lake Independence where access to existing utilities and transportation makes such development more viable. Figure 6 shows Medina's 2040 land use.

Medina's 2040 land use plan is based on an existing land use inventory and maintains the City's rural focus while still providing areas for urban growth. These urban growth areas concentrate along the Trunk Highway 55 corridor where existing transportation facilities and utility infrastructure can support such density. A fairly low percentage of the City's overall land is anticipated to change. A large amount of land is designated as open space primarily due to expansive water and wetlands. Preserving these areas helps Medina maintain the rural and natural qualities of the community. The Land Use chapter of the 2040 Comprehensive Plan outlines each phase of development to occur up to 2040.

Land use data is an important factor for estimating surface water runoff. The hard or impervious surface areas associated with each land use greatly affect the amount of runoff generated from an area. Future land use projections indicate those areas that may be available for water resource enhancement and where improvements should be a priority. Significant changes in land use can increase runoff due to added impervious surfaces. However, changes in land use also allow for the construction of stormwater BMPs. Additionally, Medina is primarily a rural community. Agricultural row crop land uses generate relatively high total suspended solids loads and nutrient runoff. Development of agricultural land will results in a net reduction in the total suspended solids loads through construction of BMPs to meet local regulations for treatment.

2.2. Water Resources Data

2.2.1.Wetlands

Figure 7 shows the wetland inventory and management class for wetlands located in Medina. The 2007 wetland inventory included an on-the-ground assessment of approximately 640 wetlands within the city. Each wetland was assessed for a variety of functions and values, and assigned a management classification based on the findings. Information gathered during the wetland assessment determines the stormwater management and buffer requirements for each wetland.

Figure 8 shows larger wetlands and lakes from the National Wetland Inventory over which the Minnesota Department of Natural Resources (MnDNR) has jurisdiction. Minnesota protects all wetlands through its Wetland Conservation Act. The wetlands and lakes under MnDNR jurisdiction have an added level of protection.

2.2.2.Major Bodies of Water

Medina's major water bodies list includes all the named, largest MnDNR protected water bodies identified on Figure 8. These water bodies include the following: Ardmore, Half Moon, Holy

Name, Independence, Katrina, Medina, Mooney, Peter, School, Spurzem, Thies and Wolsfeld Lakes. None of the lakes within the City of Medina are used for surface water appropriations.

The City has classified the MnDNR Public Waters/Wetlands within its Shoreland Overlay District regulations according to Table 2.3. Unnamed Lake #27-150 is often referred to as School Lake.

TABLE 2.3 – CITY WATER BODY CLASSIFICATIONS

Water Body Name	MnDNR Protected Waters Inventory ID#	Classification
Mooney	27-134P	Recreational Development
Peter	27-147P	Recreational Development
Winterhalter	27-148P	Natural Environment
Spurzem	27-149P	Natural Environment
Unnamed	27-150P	Natural Environment
School	27-151W	Natural Environment
Half Moon	27-152P	Natural Environment
Ardmore	27-153P	Recreational Development
Katrina	27-154P	Natural Environment
Unnamed	27-155W	Natural Environment
Thies	27-156W	Natural Environment
Wolsfeld	27-157P	Natural Environment
Holy Name	27-158P	Recreational Development
Independence	27-176P	Recreational Development

2.2.3. Water Courses

Medina has no rivers, but does have some notable creeks within its jurisdiction. Elm Creek drains northeast to Medina. The Elm Creek Watershed Management Commission is charged with protecting Elm Creek and managing its watershed. Spurzem Creek drains northwest as it flows through Peter, Spurzem, and Half Moon lakes and the numerous wetlands and marshes adjacent to these. Spurzem Creek ends at Lake Independence. Lake Katrina in southwest Medina is the head waters for Painter Creek, which flows 6.2 miles, predominantly through ditches, to Jennings Bay in Lake Minnetonka. Sarah Creek drains northwest to Medina. Beginning at Trunk Highway 55 and passing near Loretto, Sarah Creek enters Lake Sarah soon after leaving Medina.

The City has one jurisdictional ditch identified within its boundaries and it drains to the north central portion of the City located within the Elm Creek Watershed Management Commission's boundaries. It is identified as County Ditch 26.

2.2.4. Monitored Water Quality and Quantity Data

The City will continue to support monitoring of surface waters within its jurisdictional boundaries and outside these boundaries for waters to which the City discharges. Data will be obtained through cooperation and coordination with other various agencies, including the Minnesota Pollution Control Agency, cities adjacent to Medina, the Metropolitan Council, the Minnesota Department of Natural Resources, the Elm Creek and Pioneer-Sarah Creek Watershed Management Commissions, the Minnehaha Creek Watershed District, and Three Rivers Park District.

Three Rivers Park District implements a comprehensive monitoring program to determine the quality of water resources in the Park District. Staff has collected samples from 10 lakes including Independence, Spurzem, Rebecca, Medicine, Auburn, Fish, Weaver, Zumbra, and 18 bays on Lake Minnetonka, at two week intervals throughout the summer. Of those, Lake Independence and Spurzem are within the boundaries of Medina. The monitoring is done to track water quality trends, and determine if management efforts are successful. The quantity and quality of inflow to lakes is also periodically measured by staff to determine the sources of pollution entering Park District water resources. Monitoring data from the lakes sampled by Three Rivers Park District staff is available on their website at: https://www.threeriversparks.org/page/water

Other water quality information can be found from the watershed management organizations having jurisdiction within the City, Metropolitan Council, and the Minnesota Pollution Control Agency on the following websites:

- Pioneer-Sarah Watershed Management Organization monitoring information can be found at: http://www.pioneersarahcreek.org/water-quality.html
- Elm Creek Watershed Management Commission monitoring information can be found at: http://www.elmcreekwatershed.org/water-quality-overview.html
- Minnehaha Creek Watershed District information can be found at: http://www.minnehahacreek.org/data-center
- Metropolitan Council monitoring information, including the Citizen-Assisted Monitoring Program (CAMP), can be found at: http://www.metrocouncil.org/Wastewater-Water/Services/Water-Quality-Management.aspx?source=child
- Minnesota Pollution Control Agency's Citizen Lake Monitoring Program (CLMP) information can be found at: http://www.pca.state.mn.us/water/clmp.html

2.2.5.Impaired Waters

The Minnesota Pollution Control Agency (MPCA) is required to publish a list of impaired waters; these are lakes and streams in the state that are not meeting federal water quality standards. For each water body on the list, the MPCA is required to conduct a study to determine the allowable Total Maximum Daily Load (TMDL) for each pollutant that exceeds the standards. Impaired waters in Medina, or those receiving discharge from Medina, are summarized in Table 2.4.

Table 2.4 – Impaired Waters

Waterbody/Watercourse	Year Added to List	Affected Use	Pollutant/Stressor	TMDL Status
Elm Creek	2004	Aquatic Life, Aquatic Recreation	Low Oxygen, Fish Bioassessments, Chloride, E.coli	Complete
Lake Independence	2002	Aquatic Recreation	Excess Nutrients	Complete
Lake Independence[2]	2004	Aquatic Consumption	Mercury, Fish Consumption Advisory	Complete
Spurzem Lake[2]	2006	Aquatic Consumption	Mercury, Fish Consumption Advisory	Complete
Spurzem Lake[5]	2008	Aquatic Recreation	Total Phosphorous	Underway
Lake Katrina	2007	Aquatic Recreation	Total Phosphorous	Not Underway
Lake Sarah[1]	2006	Aquatic Recreation	Excess Nutrients	Complete
Lake Sarah[1, 2]	1998	Aquatic Consumption	Mercury, Fish Consumption Advisory	Complete
Lake Rebecca[1]	2008	Aquatic Recreation	Excess Nutrients	Not Underway
Lake Rebecca[1, 2]	1998	Aquatic Consumption	Mercury, Fish Consumption Advisory	Complete
Lake Minnetonka - Jennings Bay[1,3]	2008	Aquatic Recreation	Excess Nutrients	Complete
Lake Minnetonka[1, 2]	1998	Aquatic Consumption	Mercury, Fish Consumption Advisory	Complete
Long Lake[1, 2]	1998	Aquatic Consumption	Mercury, Fish Consumption Advisory	Complete
Long Lake[1,3]	2010	Aquatic Recreation	Excess Nutrients	Complete
Rush Creek[1]	2002	Aquatic Life, Aquatic Recreation	Fish Bioassessments, Dissolved Oxygen, E.coli	Complete
Half Moon Lake[2]	2012	Aquatic Consumption	Mercury, Fish Consumption Advisory	Complete
Half Moon Lake[4,5]	2016	Aquatic Recreation	Excess Nutrients	Underway
Mooney Lake[3]	2010	Aquatic Recreation	Excess Nutrients	Complete
Peter Lake[4,5]	2016	Aquatic Recreation	Excess Nutrients	Underway
School Lake[3]	2014	Aquatic Recreation	Excess Nutrients	Complete
Lake Ardmore[5]	2016	Aquatic Recreation	Excess Nutrients	Underway
Wolsfeld Lake[3]	2010	Aquatic Recreation	Excess Nutrients	Complete
Holy Name Lake[3]	2010	Aquatic Recreation	Excess Nutrients	Complete
Rice Lake-Main[6] Basin	2012	Aquatic Recreation	Excess Nutrients	Complete
Painter Creek[3]	2010	Aquatic Recreation	E. coli	Complete

[1] *Outside municipal boundary*
[2] *Statewide Mercury TMDL developed, no action is necessary*
[3] *Upper Minnehaha Creek Watershed Nutrient and Bacteria TMDL Study*
[4] *Added to the 2016 Impaired Waters List*
[5] *Part of the Pioneer-Sarah Creek Watershed WRAPS/TMDL Study*
[6] *Part of Elm Creek Watershed Management Commission TMDL Study*

Local governments will be required to incorporate completed TMDL studies into their surface water management plans and are required to incorporate any appropriate TMDL implementation activities within their Stormwater Pollution Prevention Program within 18 months of the approved date. A more detailed discussion on the status of the TMDLs can be found in Section 5.

2.2.6. Groundwater Appropriations

The City of Medina updated their Wellhead Protection Plan in August, 2013 and it is effective until 2023. The entire City is within either a low vulnerability or very low vulnerability Drinking Water Supply Management Area (DWSMA). The DWSMA vulnerability is determined using geologic, soils and groundwater chemistry information. The designation indicates that the aquifer is covered by at least 50 feet of clay material.

The City will be required to incorporate the requirements of the Wellhead Protection Plan into their Stormwater Pollution Prevention Program (SWPPP) for areas located within vulnerable source water protection areas (NPDES MS4 General Permit). Vulnerable Source Water Protection areas are those areas susceptible to contamination of the water supply from activities at the land surface and are based on the following three components: geologic sensitivity, well construction maintenance and use, and water chemistry and isotopic composition. The MDH has identified vulnerable source water protection areas and currently no areas within the City of Medina are identified as such.

Regardless of vulnerable source water protection areas being located within Medina they will incorporate the guidance developed by the MDH on evaluating proposed stormwater infiltration projects in vulnerable source water protection areas and also the guidance located within the Minnesota Stormwater Manual on designing infiltration BMPs while protecting groundwater. This will be of a particular concern in areas where infiltration is being considered in soils suitable for rapid infiltration adjacent to municipal and private wells.

The City will need to amend its groundwater appropriations permit from the DNR when their existing allocation is met. The City has also instituted an Irrigation Well Policy in its Code of Ordinances. The City gathers information on the water levels and usage from irrigation wells constructed with development through developer's agreements.

Protection of the aquifers described above is crucial in maintaining Medina's long term water supply. Achieving this will require cooperation with the Minnesota Department of Health (MDH) in developing their Wellhead Protection Plan. The goal of protecting Medina's water supply wells are to:

- Reduce the use of costly treatment facilities
- Avoid the drilling of new wells
- Avoid the need to clean up contaminated groundwater
- Wellhead protection is a means of protecting public water supply wells by preventing contaminants from entering the area that contributes water to the well or well field over a period of time.

2.3. Natural Resources Data

2.3.1. Water-based Recreation Areas

The City of Medina has public areas for access to water based recreation and activities:

Baker Park Reserve: Baker Park Reserve, an area encompassing approximately 2,108 acres and managed by the Three Rivers Park District, is located in the southwest area of the City and provides numerous water based recreation activities. In addition to the numerous trails and campgrounds located within the Reserve, boat access and fishing docks are provided at Spurzem Lake, Lake Independence and Half Moon Lake and swimming areas are provided at Lake Independence.

Independence Beach Park – Lakeshore: The City of Medina operates the relatively small Independence Beach Park, located along the eastern edge of Lake Independence and north of Baker Park Reserve.

Holy Name Lake Park: The City operates a small park along the south shore of Holy Name Lake.

2.3.2. MLCCS and MCBS

The Minnesota Land Cover Classification System, or MLCCS, categorizes urban and built up areas in terms of land cover rather than land use. MLCCS serves as a tool for City staff to integrate natural area preservation into land planning, land use, and zoning decisions. The City is dominated primarily by a mixture of forested areas, planted or cultivated vegetation, and herbaceous vegetation. The remaining areas are classified as artificial surfaces mainly located along the Trunk Highway 55 corridor and pockets of shrubland can be found throughout the City. Figure 11 provides MLCCS coverage for Medina.

According to the MnDNR, the Minnesota County Biological Survey (MCBS) began in 1987 as a systematic survey of rare biological features on a county-by-county basis. Medina has several areas identified with rare biological features. These are generally in close proximity to Medina's open space and park land and include instances of cattail marsh, lowland hardwood forest, maple-basswood forest, oak forest, shrub swamp, tamarack swamp, wet meadow, and willow swamp. The survey shows areas of outstanding and high ratings of biodiversity in Medina in the southwest corner of the municipal boundary. The DNR has jurisdiction over these areas. Based on state statute any work within these areas is required to meet DNR permit requirements. Figure 12 provides the locations of rare and biological features in the City of Medina.

2.3.3. Unique Features and Scenic Areas

The Wolsfeld Woods Scientific and Natural Area (SNA) lies on Medina's south border. The Minnesota Department of Natural Resources manages Wolsfeld Woods and all other SNAs in Minnesota. Minnesota statute stipulates that any water within an SNA is an Outstanding Resource Value Water (ORVW). This designation provides statutory protection to Wolsfeld Lake that does not occur for other water bodies within Medina. Specifically, Minnesota Rule 7050.0180 on Nondegradation for Outstanding Resource Value Waters prohibits discharge from the City's storm water system to Wolsfeld Woods and Wolsfeld Lake. Additionally, Medina is not allowed any new or expanded discharges to Wolsfeld Woods since the date it was designated a Scientific and Natural Area. Under its NPDES permit requirements, Medina must submit with its permit application:

- A list of ORVWs within the City (Wolsfeld Woods being the sole ORVW in Medina),

- A map of drainage areas to the ORVW,
- An estimate of the existing impervious coverage and proposed impervious coverage based on Medina's comprehensive plan,
- An assessment of how Medina's SWPPP will adequately eliminate new and expanded discharges,
- And suggested modifications to the SWPPP if new and expanded discharges are not adequately eliminated by the current SWPPP.

Medina completed this assessment in the spring of 2009 and provided it for public comment during their typical MS4 annual public meeting presentation. The assessment showed that due to the land use changing from primarily agriculture to low density rural residential (10 acre lots or greater) that the Total Phosphorous, Total Suspended Solids, and Volume has decreased since 1988 and is anticipated to decrease into the 2040 Comprehensive Planning year. Based on a review of the aerial image from 2009 compared to 2016, there has been limited development in the area tributary to Wolsfeld Woods. The City will continue to monitor this as development occurs.

2.3.4. Key Conservation Areas

The Minnehaha Creek Watershed District has prepared a map identifying key conservation areas found throughout the District. The map identifies several areas with the City of Medina and they are located within the Wolsfeld Woods drainage area. The City will be able to use this, along with the MLCCS data as a tool to integrate preservation of natural resources, including upland areas, into land planning, land use, and zoning decisions. The map of the Key Conservation Areas can be found on the districts website under their comprehensive water resource management plan at: http://www.minnehahacreek.org.

2.4. Water Resources Related Agreements

This section summarizes those water resources related agreements the City of Medina has established with other entities.

2.4.1. Elm Creek WMC Joint Powers Agreement

The ECWMC was formed in 1973 as a joint powers organization by the cities of Champlin, Corcoran, Dayton, Maple Grove, Medina, Plymouth and the Hennepin Conservation District. In 2004, Medina became party to an amended and restated Joint Powers Agreement reestablishing the ECWMC with Champlin, Corcoran, Dayton, Maple Grove, Plymouth, Rogers and Hassan Township.

2.4.2. Pioneer-Sarah Creek WMC Joint Powers Agreement

Medina was signatory to the 1994 Joint Powers Agreement, along with Corcoran, Greenfield, Independence, Loretto, Maple Plain, Minnetrista, Watertown Township, and Hennepin Conservation District, which established the PSWMC.

SECTION 3

3. AGENCY COOPERATION

There are a number of local, State, and Federal agencies that have rules and regulations related to local water management. The City recognizes the roles of these other agencies and will cooperate, coordinate, and when possible partner with these agencies. This section describes the City's current surface water management program and practices and identifies the agencies and organizations having roles in the City's management of these resources. Table 3.1 summarizes the City's and other agencies' respective regulatory controls related to water resources management and protection.

Table 3.1 – Regulatory Control

Official Control	Responsibility	Mechanism
Stormwater Management	City, WMO	Chapter 8, Section 828.33 of City Code, Zoning- Performance Standards and Enforcement, Stormwater Management; Chapter 7, Section 745.00 of City Code, Public and Private Utilities, Storm Water Utility Ordinance
Erosion and Sediment Control	City, WMO, PCA	Chapter 8, Section 828.29 of City Code, Zoning – Performance Standards and Enforcement, Construction Site Storm Water Runoff Control Ordinance
Shoreland	City, WMO, MnDNR	Chapter 8, Section 827 of City Code, Zoning – Zoning Districts, Shoreland Overlay District
Floodplain	City, WMO, MnDNR	Chapter 8, Section 826.74 of City Code, Zoning – District Provisions, Floodplain District, Floodplain Management Ordinance
Wetlands	City as LGU, MnDNR, USACE, and Technical Advisory Panel (TEP) Members, & BWSR	Public Waters Rules (MnDNR). Section 404 of the Clean Water Act (USACE). WCA (TEP Members). Chapter 8, Section 828.43 of City Code, Zoning – Performance Standards and Enforcement, Wetland Conservation. A new Wetland Protection Ordinance was adopted upon completion of the City's Wetland Inventory and Assessment
Illicit Discharge	City	Chapter 7, Section 747 of City Code, Storm Water Illicit Discharge and Connections
Grading and Drainage	City, WMO	Chapter 8, Section 820 of City Code, Land and Building Regulations. Chapter 8, Section 825.55 of City Code, Land and Building Regulations, Site Plan Review – application of the requirements of this LSWMP

**Acronyms are defined in the sections below*

3.1. City of Medina

The Medina Public Works Department is in charge of all the public facilities in Medina and the Public Works staff maintains city roads, parks, sanitary and storm sewers, and the water utility. Public Works staff provides the design, operation and repair work necessary to prevent flooding and improve water quality in Medina's drainage system. The Public Works Department coordinates with watershed management organizations and other outside agencies in water resource management and conservation.

The Medina Planning and Zoning Department manages comprehensive planning and administers the City's land and building code (City Code Chapter 8). Chapter 8 includes performance management standards that cover water resource management issues such as: construction site erosion control, floodplain management, shoreland preservation, tree preservation, and wetland protection. The Stormwater Management Ordinance is Section 828.33 of City Code Chapter 8. Additionally, the City is in the process of updating its Stormwater Design Guide. The Stormwater Design Guide has been incorporated by reference into Medina's City Code. Ordinances can be found in Appendix D.

The City's environment code (City Code Chapter 5) contains the additional regulations related to surface water management:

- Section 510 Boats, Harbors, and Waters
- Section 512 Surface Use of Lake Independence
- Section 520 Turf Fertilizer Containing Phosphorus

Further information on municipal regulations summarized in Table 3.1 can be obtained from the City's website at http://www.ci.medina.mn.us.

3.2. Hennepin County

The County provides many services within the City of Medina, including health services and property and vital records. Hennepin County was the first county to begin groundwater planning in 1988, with authority delegated to the Hennepin Conservation District. Hennepin County has assumed all duties and responsibilities of the Hennepin Conservation District. That groundwater plan received state approval in March 1994. Although the county has not formally adopted the plan, the county is proceeding with implementation of many aspects of the plan. In addition, the County's Department of Environment and Energy provides education, outreach, and funding to individuals and organizations. These programs include the Hennepin County River Watch and the Wetland Health Evaluation Program.

Hennepin County Department of Environment and Energy provides technical assistance to county residents, local government units, watershed organizations, and other agencies. They have assisted local governments with implementation of natural resource management plans, the Wetland Conservation Act, natural resource education, and application of sound natural resource practices. Their programs are funded through County allocation, grants, and contracts with local government units, contracts with watershed organizations, and state and federal cost share. Within the City of Medina, the Department of Environment and Energy provides administration and technical services, including project review, for the Pioneer-Sarah Watershed Management Commission and Elm Creek Watershed Management Commission. http://www.hennepin.us/

3.3. Three Rivers Park District

Three Rivers Park District is an independent, special park district established by the State Legislature in 1957. As a special park district, Three Rivers Park District is charged with the responsibilities of acquisition, development and maintenance of large park reserves, regional parks and regional trails for the benefit and use of the citizens of suburban Hennepin County, Scott County, the metropolitan areas, and the State of Minnesota.

The Three Rivers Park District is also responsible for managing the Park District's water resources in cooperation with the surrounding communities and watershed management organizations in a way that is environmentally responsible and that will maintain lake water quality at or above the levels experienced in 1989. Within the City of Medina, the Park District manages the Baker Park Reserve.

3.4. Watershed Management Organizations (WMO)

The City of Medina is divided into multiple drainage basins that flow to three separately managed watersheds. Figure 2 shows the three watershed management organizations with jurisdiction in the City. These agencies each have authority for review and approval of this local surface water management plan.

3.4.1.Pioneer-Sarah Creek Watershed Management Commission (PSCWMC)

PSCWMC was formed in 1978 and covers portions of Greenfield, Independence, Loretto, Maple Plain, Medina and Minnetrista. PSCWMC administration is provided by the Hennepin County Department of Environment and Energy. PSCWMC covers approximately 7.5 square miles in Medina. PSCWMC adopted their Third Generation Watershed Management Plan on May 21, 2015. The plan update included revisions to their Rules and Standards. Refer to the PSCWMC for specific requirements. http://www.pioneersarahcreek.org/

The Commission requires a plan review to be completed by the local permitting authority for development or redevelopment if any part of the development is within a 100-year floodplain or upland flood storage area and/or the project changes the timing, storage, or carrying capacity of any tributaries of the 100-year floodplain. PSCWMC thresholds require local permitting through Medina for the following project descriptions:

- Any land development or site development that disturbs more than 1 acre
- Linear projects that result in a net increase in impervious surfaces of one acre or more.

When a project plan transcends municipal boundaries, a Commission review is required. Additionally, PSCWMC requires Medina to review permit plans involving the alteration of waterways, culvert or bridge installations or replacements in waterways. This would be in addition to any state or federal permits that might pertain to these activities.

3.4.2. Elm Creek Watershed Management Commission (ECWMC)

ECWMC was formed in 1973 and covers portions of Champlin, Corcoran, Dayton, Maple Grove, Medina and Plymouth. ECWMC administration is provided by Hennepin County. ECWMC covers approximately 26.3 square miles in Medina. ECWMC adopted their Third Generation Watershed Management Plan on October 14, 2015. Medina has two years from that date to update their SWMP.

The Third Generation Plan can be accessed from their website. http://www.elmcreekwatershed.org

ECWMC did not update their rules and standards with the Third Generation Plan. The Commission requires a plan review to be completed by the local permitting authority for development or redevelopment if any part of the development is within a 100-year floodplain or upland flood storage area and/or the project changes the timing, storage, or carrying capacity of any tributaries of the 100-year floodplain. ECWMC thresholds require local permitting through Medina for the following project descriptions:

- Any land development or site development that disturbs more than 1 acre
- Linear projects that result in a net increase in impervious surfaces of one acre or more.

When a project plan transcends municipal boundaries a Commission review is required. Additionally, ECWMC requires Medina to review permit plans involving the alteration of waterways, culvert or bridge installations or replacements in waterways. This would be in addition to any state or federal permits that might pertain to these activities.

3.4.3.Minnehaha Creek Watershed District (MCWD)

MCWD was formed in 1967 and covers portions of numerous cities and townships in Hennepin and Carver counties. These cities and townships include: Chanhassen, Deephaven, Excelsior, Golden Valley, Greenwood, Hopkins, Independence, Laketown Township, Long Lake, Maple Plain, Medina, Minneapolis, Minnetonka, Minnetonka Beach, Minnetrista, Mound, Orono, Plymouth, Richfield, St. Bonifacius, St. Louis Park, Shorewood, Spring Park, Tonka Bay, Watertown Township, Wayzata, and Victoria. MCWD covers approximately 10.1 square miles in Medina.

MCWD is currently in the process of updating its Comprehensive Water Resources Management Plan that was completed in 2007. The goals of the MCWD updates are to encourage collaboration among municipalities and the District in how they approach stormwater management.

Medina expects that MCWD will continue to implement its rules within Medina's jurisdiction according to the thresholds identified within the rules.

The following tables provide a summary of their current stormwater management practices that are required based on the type of development that is occurring. Their website should be referenced for specific requirements. http://www.minnehahacreek.org/

Table 2: Stormwater management requirements for new development

Site Size	Impervious Surface	Requirements
< 1 acre	N/A	None
≥ 1 acre	< 20% of site	None
	≥ 20% of site	Phosphorus Control, Rate Control, and Volume Control

Table 3: Stormwater management requirements for redevelopment resulting in a decrease or no change in impervious surface

Site Size	Site Disturbance	Impervious Surface Reduction	Requirements
≤ 1 acre	N/A	10% reduction in impervious surface	None
		0 - 9% reduction in impervious surface	Incorporate BMPs
> 1 acre - ≤ 5 acres	< 40% site disturbance	10% reduction in impervious surface	None
		0 - 9% reduction in impervious surface	Incorporate BMPs
	≥ 40% site disturbance	10% reduction in impervious surface	None
		0 - 9% reduction in impervious surface	Volume control required for site's impervious surface
> 5 acres	< 40% site disturbance	10% reduction in impervious surface	None
		0 - 9% reduction in impervious surface	Incorporate BMPs
	≥ 40% site disturbance	N/A	Volume control required for site's impervious surface

Table 4: Stormwater management requirements for redevelopment resulting in an increase in impervious surface

Site Size	Site Disturbance	Impervious Surface Increase	Requirements	Treatment Scope
≤ 1 acre	N/A	N/A	Incorporate BMPs	N/A
> 1 acre	< 40% site disturbance	< 50% increase in impervious surface	Phosphorus Control, Rate Control, and Volume Control	Additional impervious surface
		≥ 50% increase in impervious surface		Entire site's impervious surface
	≥ 40% site disturbance	N/A	Phosphorus Control, Rate Control, and Volume Control	Entire site's impervious surface

Table 5: Stormwater management requirements for linear transportation projects

Project Type	Impervious Surface Increase	Requirements	Treatment Scope
New Linear Transportation Project	< 10,000 square feet	None	N/A
	≥ 10,000 square feet	Phosphorus Control, Rate Control, and Volume Control	New impervious surface
Linear Reconstruction Project	< 10,000 square feet	None	N/A
	≥ 10,000 square feet and < 1 acre	Phosphorus Control and Rate Control	Additional impervious surface
	≥ 1 acre	Phosphorus Control, Rate Control, and Volume Control	Additional impervious surface

3.5. Metropolitan Council

Established by the Minnesota Legislature in 1967, the Metropolitan Council is the regional planning organization for the Twin Cities, seven-county area. The Council manages public transit, housing programs, wastewater collection and treatment, regional parks and regional water resources. Council members are appointed by the Minnesota Governor.

The Metropolitan Council reviews municipal comprehensive plans, including this local surface water management plan. The Council updated the Water Resources Management Policy Plan in 2015, establishing the expectations to be met in local plans. As part of the updated Minnesota Rules Chapter

8410 adopted July of 2015, all local water management plans must be updated prior to December 31, 2018. The Council's goals focus on water quality standards and pollution control, "to reduce the effects of nonpoint source pollution on the region's wetlands, lakes, streams and rivers."

3.6. State Board of Soil and Water Resources (BWSR)

BWSR works through local government agencies to implement Minnesota's water and soil conservation policies. The BWSR is the administrative agency for soil and water conservation districts, watershed districts, watershed management organizations and county water managers. BWSR is responsible for implementation of the Metropolitan Surface Water Management Act and the Wetland Conservation Act. Staff members are located in eight field offices throughout the state.

First established in 1937 as the State Soil Conservation Committee, the agency became part of the University of Minnesota in the 1950's, transferred to the Minnesota Department of Natural Resources in 1971, then transferred to the Department of Agriculture in 1982. In 1987 the State Legislature established the current Board of Water and Soil Resources. The Board consists of 17 members, appointed by the governor to four-year terms. Multiple state and local agencies are represented on the Board.

In 1992, BWSR adopted rules (8410), establishing the required content for local surface water management plans. These rules were updated July 2015.

3.7. Minnesota Pollution Control Agency (MPCA)

The MPCA is the state's lead environmental protection agency. Created by the State Legislature in 1967, the MPCA is responsible for monitoring environmental quality and enforcing environmental regulations to protect the land, air and water. The MPCA regulates Medina's management of wastewater, stormwater and solid waste.

The MPCA is the permitting authority in Minnesota for the National Pollutant Discharge Elimination System (NPDES), the federal program administered by the Environmental Protection Agency to address polluted stormwater runoff. Medina's most recent application for NPDES coverage was submitted in June 2006. To obtain coverage, the City was required to develop a Stormwater Pollution Prevention Program (SWPPP) to address the following six minimum control measures:

1. Public Education
2. Public Involvement
3. Illicit Discharge Detection and Elimination
4. Construction Site Runoff Control
5. Post-construction Runoff Control
6. Pollution Prevention in Municipal Operations

A copy of Medina's SWPPP is included in Appendix B.

Medina currently has eleven impaired water bodies within its jurisdiction as well as five outside of municipal boundaries. A full list of the impaired waters and their TMDL status can be found in Section 2 Table 2.4. The City will be evaluating the TMDL requirements and updating their NPDES SWPPP to include the applicable implementation activities. Additionally, as part of its permit application, Medina must conduct an impaired waters review. This review considers whether modifications to Medina's SWPPP are warranted to begin working toward waste load reductions for these waters.

In response to these multiple regulatory activities, the MPCA developed the Minnesota Stormwater Manual, providing stormwater management tools and guidance. The Manual presents a unified statewide approach to stormwater practices. In order to address the constant influx of information pertaining to stormwater management, the Minnesota Stormwater Manual was updated to an electronic wiki page in 2013. This format allows the content to be updated continually and easily maintained. The link to the Minnesota Stormwater Manual can be found here:
https://stormwater.pca.state.mn.us/index.php?title=Main_Page

3.8. Minnesota Department of Natural Resources (MnDNR)

Originally created in 1931 as the Department of Conservation, the MnDNR has regulatory authority over the natural resources of the state. MnDNR divisions specialize in waters, forestry, fish and wildlife, parks and recreation, land and minerals, and related services. The Division of Waters administers programs in lake management, shoreland management, dam safety, floodplain management, wild and scenic rivers, the Public Waters Inventory (PWI), and permitting of development activity within public waters.

3.9. Minnesota Department of Health (MDH)

The MDH manages programs to protect the public health, including implementation of the Safe Drinking Water Act. The MDH has regulatory authority for monitoring water supply facilities such as water wells, surface water intakes, water treatment, and water distribution systems. The MDH also is responsible for the development and implementation of the wellhead protection program.

3.10. Minnesota Environmental Quality Board (EQB)

The EQB is comprised of five citizen members and the heads of ten state agencies that play an important role in Minnesota's environment and development. The EQB develops policy, creates long-range plans and reviews proposed projects that may significantly influence Minnesota's environment.

3.11. Minnesota Department of Transportation (Mn/DOT)

Within the City, Mn/DOT administers state highway systems. Mn/DOT approval is required for any construction activity within state right-of-ways. Mn/DOT also administers a substantial amount of funding for transportation projects completed in the City. Anticipated activities of Mn/DOT are periodically published in their State Transportation Improvement Plan (STIP).

3.12. U.S. Environmental Protection Agency (EPA)

The EPA develops and enforces the regulations that implement environmental laws enacted by Congress; however the MPCA bears responsibility for implementing many of the resulting programs within Minnesota. The NPDES program and the Impaired Waters List are both the result of the Clean Water Act, administered by the EPA.

3.13. U.S Army Corps of Engineers (USACE)

Under Section 404 of the Clean Water Act, including subsequent modifications, the EPA and the USACE regulate the placement of fill into all wetlands of the U.S. In 1993, there was a modification of the

definition of "discharge of dredged material" to include incidental discharges associated with excavation. This modification meant that any excavation done within a wetland required the applicant to go through Section 404 permitting procedures. In 1998, however, this decision was modified so that excavation in wetlands is now regulated by the USACE only when it is associated with a fill action.

3.14. Federal Emergency Management Agency (FEMA)

FEMA manages federal disaster mitigation and relief programs, including the National Flood Insurance Program (NFIP). This program includes floodplain management and flood hazard mapping. FEMA published the initial Flood Insurance Rate Map (FIRM) for Medina in 1980. The effective FIRM was updated for Hennepin County, including Medina, in 2016.

3.15. Natural Resource Conservation Service (NRCS)

The Natural Resources Conservation Service (NRCS) is a division of the U.S. Department of Agriculture. Formerly named the Soil Conservation Service (SCS), the NRCS provides technical advice and engineering design services to local conservation districts across the nation. The Soil Survey of Hennepin County, Minnesota was published by the Soil Conservation Service in 1974. The SCS also developed hydrologic calculation methods that are widely used in water resources design.

3.16. U.S. Geological Survey

The USGS provides mapping and scientific study of the nation's landscape and natural resources. USGS maps provide the basis for many local resource management efforts.

3.17. Minnesota Geological Survey (MNGS)

MNGS maps the geologic resources of the state of Minnesota as well as maintains the database of all wells drilled in Minnesota

3.18. U.S. Fish and Wildlife Service

The USFWS works to conserve and protect the nation's fish, wildlife, plants and habitat. The USFWS developed the National Wetlands Inventory (NWI) beginning in 1974, to support federal, state and local wetland management work.

3.19. NPDES Permitting Process

The MPCA has designated the City of Medina as an NPDES Phase II MS4 community (MN Rules 7090). The permit application outlined Medina's Stormwater Pollution Prevention Plan (SWPPP) to address six minimum control measures:

- Public education
- Public involvement
- Illicit discharge detection and elimination
- Construction site runoff control
- Post-construction runoff control
- Pollution prevention in municipal operations

The City's SWPPP contains several Best Management Practices within each of the listed control measures. These were identified using a self-evaluation and input process with City staff.

Many of the goals and policies discussed in this local surface water management plan are directly related to requirements listed in the NPDES program. As a result, the implementation section of this plan references items listed in the City's SWPPP.

Along with the SWPPP, Medina is subjected to the NPDES permit requirement on prohibited discharges due to Wolsfeld Woods being designated as a MnDNR scientific and natural area. Under the NPDES permit requirements, the City of Medina is required to submit with permit application a list of ORVWs with prohibited discharge, map the drainage areas, estimate the existing impervious coverage and proposed impervious coverage based on zoning and comprehensive plans, assess how the SWPPP will adequately eliminate new and expanded discharges, and suggest modifications to SWPPP that will adequately eliminate new and expanded discharges.

As a requirement of the TMDL the City will be evaluating all TMDL requirements and updating their NPDES SWPPP to include the applicable implementation activities.

3.20. Comparison of Regulatory Standards

Developing property within Medina is subject to review and approval from three watershed management organizations covering the City (Figure 2). Each watershed organization has established rules or standards governing stormwater management and protection of natural resources. Currently these rules vary in content between agencies, and may be more or less restrictive than City standards. When standards diverge, Medina emphasizes that the stricter standards apply. The City of Medina's Stormwater Design Manual and Engineering Guidelines can be found in Appendix F.

The Pioneer-Sarah and Elm Creek Watershed Management Commissions have developed standards based on the goals and policies in their watershed management plan. These standards overlap Medina's in some respect and cover ground not covered by Medina in other respects. Ultimately, it is not the goal of Medina's Local Surface Water Management Plan that watershed and Medina regulatory programs be identical. Rather it is the goal of this plan that the regulatory programs be compatible and that it be understood that if one entity's regulations are silent on a subject the others may not be and that project proposers should take care to ensure that all overlying standards are considered.

SECTION 4

4. ASSESSMENT OF ISSUES

4.1. Stormwater Management System Assessment

Previous sections of this Local Surface Water Management Plan (LSWMP) provide background on the physical and regulatory forces shaping surface water management in Medina. This section describes problems and challenges of specific waters, neighborhoods or programs identified by the City, watershed districts and others. Minnesota Statutes and Rules and Metropolitan Council guidance documents require "issues and corrective actions" or "problems and corrective actions" as elements of Local Surface Water Management Plans. The intent of this section is to serve the same purpose as this issue and identification requirement, but to also provide a broader assessment of the challenges facing Medina. The assessment includes stormwater management issues, current and future, identified by the City, the three watersheds with jurisdiction within the City, and other state and federal agencies.

4.2. Total Maximum Daily Loads (TMDLs)

A Total Maximum Daily Load (TMDL) is the maximum amount of a pollutant that is allowed to discharge to an impaired water body. The process of developing this standard is commonly known as the TMDL process and involves the following phases:

- Assessment and listing as an impaired water (MPCA 303(d) list)
- TMDL study
- Implementation plan development and implementation
- Monitoring of the effectiveness of implementation efforts

Table 2.4 in Section 2 identifies seventeen impaired waterbodies either within the City of Medina or in adjacent communities receiving discharge from Medina. Currently, four TMDL studies have been approved that designates wasteload allocations to the City. Pioneer-Sarah Creek Watershed is currently in the process of approving a TMDL study that lists TMDLs for Ardmore Lake, Peter Lake, Half Moon Lake, and Spurzem Lake. A link to each TMDL study is listed below. Table 4.1 lists Medina's allowed wasteload allocations and required yearly load reductions. A detailed description of the relevant corrective actions for the TMDL requirements is found in Section 4.3.

- Lake Independence TMDL Study
- Lake Sarah TMDL Study
- Upper Minnehaha Creek Watershed Nutrient and Bacteria TMDL Study
- Elm Creek Watershed Management Commission TMDL
- Pioneer-Sarah Creek Watershed TMDL Study (DRAFT)

Table 4.1 Wasteload Allocations for Medina

Impaired Waterbody	Relevant TMDL Report	Wasteload Phosphorus Allocation (lbs/year)	Required Load Reduction (lbs/year)	Related Corrective Action in Section 4.3
Lake Independence	Lake Independence TMDL	231.0	284.0	1,2,3,6
Lake Sarah	Lake Sarah TMDL	92.9	249.0	6,16
Holy Name Lake	Upper Minnehaha Creek Watershed TMDL	1.0	26.0	6,9
Long Lake	Upper Minnehaha Creek Watershed TMDL	113.0	103.0	6,7,9,10,11
Jennings Bay	Upper Minnehaha Creek Watershed TMDL	140.0	398.0	6,9
Mooney Lake	Upper Minnehaha Creek Watershed TMDL	1.0	7.0	6,9
Wolsfeld Lake	Upper Minnehaha Creek Watershed TMDL	16.0	76.0	6,9,10,11,13,14
School Lake	Upper Minnehaha Creek Watershed TMDL	7.0	32.0	6,12,9
Rice Lake-Main Basin	Elm Creek Watershed TMDL	202.7	1068.3	6
Peter Lake	Pioneer-Sarah Creek Watershed TMDL (draft)	9.6	0.0	6
Spurzem Lake	Pioneer-Sarah Creek Watershed TMDL (draft)	12.2	92.5	6,8
Lake Ardmore	Pioneer-Sarah Creek Watershed TMDL (draft)	1.3	15.2	1,2,3,6

The TMDL study for lakes with mercury impairments was part of a larger, statewide study and aims at reducing the mercury level produced from human induced input by 14% in the state and by 86% at the federal level.

The Upper Minnehaha Creek TMDL study also requires the City of Medina to address the E.coli impairment for Painter Creek. ECWMC is in the process of developing a manure management ordinance, which the City will adopt to aid in limiting runoff from animal farms. The City will continually educate residents on manure management as well as general pet waste. As the City develops and new BMPs are constructed, bacteria from stormwater runoff will also be removed.

Regarding the City's role in future TMDLs and TMDL Implementation Plans, the City recognizes that the responsibility for completion and implementation of the TMDL studies lies with the primary stakeholders contributing to the impairment. The City intends to cooperate with the MPCA and the watersheds in the development of the TMDL studies, with the understanding that the MPCA generally takes the lead on these studies with the watersheds providing data, technical support, and communication and coordination with the cities.

It is the intention of the City to fully implement the items and actions identified in existing and future TMDL Implementation Plans and designate adequate funding for those efforts. Section 4.3 addresses these TMDL issues by providing corrective actions for the City.

4.3. Summary of Issues and Corrective Actions

An assessment of existing and potential water resource issues have been identified based on current information available to the City and include those listed in the Watershed Management Plans of the three WMOs with jurisdiction in the City. Possible corrective actions have been identified and are listed in the Implementation Plan (Section 7). Locations for each corrective action are labeled and prioritized in Figure 16.

The City of Medina considers Low Impact Development (LID) techniques an integral component to addressing current and preventing future water resource issues within the City. The City promotes the use of LID to obtain pollutant and volume reductions of stormwater. This technology strategically places BMPs nearer the point where runoff is generated and utilizes vegetation, soils, and biologic treatment in an effort to replicate natural hydrologic process on an urban landscape.

The numbering of the corrective actions for each issue are labeled to correspond with the numbering in Figure 16. The City has identified 11 high priority projects and eight additional potential improvements. Higher priority ranking was given to projects that have a low cost to water quality benefit ratio, are on publicly owned property, or are adjacent to upcoming street reconstruction projects.

A. Issue: Poor water quality in Lake Ardmore and Lake Independence.

1) Corrective Action: Hennepin County completed the Ardmore Subwatershed Stormwater Retrofit Analysis in March 2016. The study identifies three potential wetland restoration projects within the Ardmore subwatershed. The highest scoring wetland restoration water quality project is the Lake Ardmore wetland restoration west of County Road 19 and north of Maple Street as shown on Figure 16.

   The goal of these projects is to closely approximate the original wetland's natural condition, resulting in multiple environmental benefits, but primarily to store additional water and assimilate nutrients. This wetland receives runoff from 472 acres and the proposed improvements would result in approximately 48 pounds of total phosphorus (TP) reduction per year. The existing wetland is ditched and the elevation is controlled by an existing culvert under Maple Street. The proposed improvement would consistent of modifying the outlet to provide extended detention and restore the ditched wetland.

   The estimated cost for the project is $386,000 including maintenance costs for a 20-year period. This equates to a cost per pound of TP removed of $402. The primary cost is the easement acquisition, estimated at $2,500 per acre for wetland and $30,000 per acre for cropland. The project would also require reconstruction of a portion of Maple Street (included in the cost estimate). A potential option to reduce the cost of this stormwater retrofit would be to time it with a future street reconstruction project.

   The two primary benefits of this project are the low cost per pound of TP removal and the opportunity to restore the function and value of the existing wetland complex.

2) Corrective Action: The Ardmore Area Subwatershed Stormwater Retrofit Analysis also identified Lake Independence shoreline restoration. The project is located on several parcels owned by the City of Medina (therefore no easement acquisition is required which streamlines the process). Under existing conditions, visual observations indicate that shoreline erosion is occurring near Lakeshore Park on either side of the boat ramp. The erosion is approximately 160 feet long and is estimated to contribute 2 lbs/yr of phosphorus to Lake Independence.

   This phosphorus load could be eliminated by stopping the erosion by restoring the shoreline. Additionally, this project would provide an opportunity for stormwater education in a high visibility location adjacent to Lake Independence. The restoration includes armoring (typically riprap) along the shoreline to protect against wave action. Native vegetation (pollinator friendly species) can be established above the shoreline armoring.

   The estimated cost per pound of TP removed is $1,100. The primary benefits of this project are its location on existing City owned property and visibility as a stormwater education measure.

3) Corrective Action: Fern Street gully restoration identified in the Ardmore Area Subwatershed Stormwater Retrofit Analysis. The gully north of Fern Street receives concentrated flow via a storm sewer pipe. This project includes restoration to stabilize the side slopes and bottom to reduce the erosion that is occurring. A significant sediment load is contributed to gullies as the erosion sluffs the side slopes and stormwater runoff transports the sediment load downstream to Lake Independence.

   Field measurements showed that the gully is approximately 120 feet long, five feet wide and four feet deep. The approximate footprint that the erosion occurs in is 600 square feet. The BWSR Pollution Reduction Estimator worksheet was used to determine the benefit in phosphorus load reduction from stabilization of the Fern Street gully. In total, it is estimated that 1,390 cubic feet or 50 tons of sediment has been eroded to date. Gully stabilization would significantly reduce the TSS load and could reduce the TP load by 100%.

   The estimated cost per pound of TP removed is $277 for this project. An additional benefit of this project is it is upstream of an existing wetland and would remove sediment load that is discharged into this wetland prior to Lake Independence.

   It should be clearly noted that the costs for each of these projects are based on 2017 dollars, include 20-year maintenance periods and do include easement acquisition costs.

B. Issue: Minimize flooding throughout the City. FEMA recently updated the Flood Insurance Rate Maps for Medina. However, the majority of the mapped waterbodies are Zone A, which indicates that a Base Flood Elevation is not established. This poses a challenge for determining property and building elevations for development adjacent to the Zone A waterbodies. In response to this, the City has identified the following corrective actions.

   4) Corrective Action: Hydrologic/hydraulic studies to establish Base Flood Elevations (BFE)

for FEMA mapped waterbodies in PSWMC and ECWMC. (MCWD has BFEs established)

5) Corrective Action: The following locations were identified in the previous SWMP and by City Staff as concerns for roadway flooding.

   a. Evaluate options to address flooding on the NE quadrant of Medina Road and Tamarack Drive.

   b. Corrective Action: Evaluate options to address flooding on Tamarack Road south of CSAH 24.

   c. Corrective Action: Evaluate options to address flooding on Willow Drive south of CSAH 24.

C. Issue: Reduce reliance on potable water for irrigation

6) Corrective Action: Expand education program for benefits of water reuse for irrigation throughout the City. The City currently has information available on its website regarding the Stormwater Irrigation Ordinance. Additional information on the value of utilizing stormwater runoff for irrigation and the permitting and other associated requirements could be included to augment what is already provided.

7) Corrective Action: Education and cooperation with Spring Hill Golf Course.

8) Corrective Action: Education and cooperation with Baker Golf Course.

D. Issue: Elevated external and internal phosphorus loads throughout the Long Lake Creek Subwatershed waterbodies.

9) Corrective Action: City-wide education program to address manure management.

10) Corrective Action: Implement projects and studies to address load sources identified in the Long Lake Creek Subwatershed Plan, Upper Minnehaha Creek Watershed Nutrient and Bacteria TMDL Restoration Strategy Report, and the Upper Minnehaha Lakes Final TMDL. This includes partnering with Long Lake for internal load management through carp removal. The Upper Minnehaha Lakes Final TMDL Report identifies internal loading from rough fish as a potential source of phosphorus with unknown impact on 3 of the 5 lakes in the Long Lake Creek Subwatershed. Recent studies completed by the Minnesota Aquatic Invasive Species Research Center show that it is possible to quantify the carp population and develop integrated pest management (IPM) strategies to sustainably manage those populations and mitigate their effects.

    Corrective Action: Continue to maintain and foster regional partnerships between Long Lake, Orono, MCWD, and the Long Lake Waters Association to implement projects to improve water quality within the Long Lake Creek subwatershed. Carp assessment and management has been identified as a priority among these agencies. The City of Medina will look for additional opportunities to partner with MCWD on any future wetland restorations or pond retrofit projects.

11) Corrective Action: The City has identified top priorities for partnership opportunities with MCWD to address issues in the Long Lake Creek Subwatershed. Some of these include:
    a. Potential opportunity to improve stormwater management of Tamarack Road when it is reconstructed in 2018-2019.
    b. Opportunity to collaborate to improve Wolsfeld Woods due to an increase in public interest in the property.
    c. Opportunity to repair/abate erosion on streambanks near Meadow Woods Trail.
    d. Identification of grant sources for improved manure management.

12) Corrective Action: Partner with MCWD on School Lake internal load management. The Upper Minnehaha Lakes Final TMDL Report identifies an implementation item for School Lake to complete a fish survey and evaluate the need for management activities. The City will also identify the need for additional internal load management such as alum treatment.

E. Issue: Painter Creek is listed as impaired for E.coli. A TMDL was complete as part of the Upper Minnehaha Creek Watershed Nutrient and Bacteria TMDL Study.

13) Corrective Action: Partner with MCWD to undertake any wetland and/or streambank restoration projects along the reaches of Painter's Creek within the City of Medina. The draft 2017 MCWD Watershed Management Plan does not currently identify any planned restoration areas located within Medina. The City will also look to provide education and outreach regarding pet waste management and will establish a manure management ordinance for large farming operations located throughout the City.

F. Issue: Local erosion that contributes excess sediment to degraded waterbodies.

14) Corrective Action: Cooperate with DNR, MCWD to assess local erosion in Wolsfeld Woods that may contribute to lake sediment loads. The Long Lake Creek subwatershed Plan indicated concerns with gullies and channel erosion upstream of Wolsfeld Woods. The City of Medina will work with the DNR and MCWD to specifically identify these locations and work to restore the potential sources of erosion. Additional field inspection is required prior to determining a cost and water quality benefit associated with this action.

15) Corrective Action: Existing developable land use within Elm Creek Watershed is primarily used for agriculture. As development occurs, TSS and TP loads will be reduced through the construction of BMPs. Table 4.2 demonstrates the existing untreated TSS and TP load of agricultural land versus future developed commercial and single family residential land use. BMPs will be constructed as development occurs, which will reduce the overall offsite loading and help Medina reduce local erosion and help in meeting phosphorus reduction requirements for Elm Creek. A standard wet basin was used to estimate sediment removals per acre of developed land.

Table 4.2 Yearly Load Reduction for Assumed Development

Land Use	TSS Load/Acre	TP Load /Acre	TSS Load Removed by Pond (~84%)	TP Load Removed by Pond (~50%)	Future TSS Load/Acre	Future TP Load/Acre
Agriculture (existing)	367.0	1.11	---	---	---	---
Commercial	1119.0	1.39	940.0	0.70	179.0	0.69
Single Family Residential	312.0	0.95	262.1	0.48	49.9	0.47

Source: MPCA Estimator Worksheet, https://stormwater.pca.state.mn.us/index.php/Guidance_and_examples_for_using_the_MPCA_Estimator

16) Corrective Action: Partner with ECWMC on creek restoration near Hamel Road in Rainwater Park. The City of Medina has a proposed trail project within Rainwater Park. Creek restoration for a project of Elm Creek within the Rainwater Park limits could be eliminated in conjunction with the trail project. The City of Medina will coordinate with ECWMC to evaluate potential erosion issues in Elm Creek in this reach and projects to reduce erosion and to provide a stabilized riparian habitat.

    The estimated cost for this project is $530,000, assuming stabilization of approximately 1,000 lineal feet of channel. The estimated load reduction is 50 tons of TSS/year. Additional field verification will be needed to verify the extent of streambank restoration needed and resultant water quality benefit.

G. Issue: Conservation of wetlands and uplands throughout the City.

17) Corrective Action: Gully restoration in partnership with Three Rivers Park District.

18) Corrective Action: Take the Loretto sewer ponds offline and connect to the MCES system. This project was identified in the City of Medina's previous plan and has not been implemented yet.

19) Corrective Action: Tomahawk Trail wetland restoration.

H. Issue: Agricultural runoff contribution to lake and stream TMDLs

20) Corrective Action: The City will coordinate will MCWD, PSCWMC and ECWMC to develop a manure management ordinance

21) Corrective Action: As the City develops, agricultural land use will change to rural residential. Table 4.2 shows the removal of sediment based on the land use change and construction of BMPs.

4.4. Minnehaha Creek Watershed District (MCWD)

The 2007 District Watershed Management Plan focused on phosphorus load reductions required of the City through various implementation activities. Other areas of concern include local flooding,

landlocked basins, flow velocity, erosion, and land conservation. Minnehaha Creek Watershed District divided their watershed plan into several subwatershed plans, two of which pertain to Medina: Painter Creek Subwatershed Plan and Long Lake Subwatershed Plan.

The 2007 Plan also identified several key conservation areas located in Medina. These conservation areas are basically comprised of high quality wetlands. These key areas are located around School Lake and the channel that drains southeast to Wolsfeld Lake. Wolsfeld Lake contains significant high-quality natural wetland and upland areas. The area to the northwest and southwest of Holy Name Lake contains a number of moderate to high-quality wetlands. In general, Medina will consider conservation, preservation, and wetland restoration when development proposals arise within the areas identified by the watershed. More specifically, Medina will implement its buffer requirements and promote low impact development techniques if development occurs in these key conservation areas.

Wolsfeld Woods, a Scientific and Natural Area (SNA), is located within Medina's boundaries. As an SNA, Wolsfeld Woods and Wolsfeld Lake are considered an Outstanding Resource Value Water by the State of Minnesota. This means there is a statutory prohibition on new and expanded discharges to the SNA. As stated previously, Medina's proposed management program meets the statutory requirement of no new and expanded discharge to Wolsfeld Woods.

The District is currently in the process of updating its Watershed Management Plan. This Plan is expected to be approved by the end of 2017. The focus on the 2017 Plan is less on the regulatory aspects and more on collaboration and cooperation between the cities and the District. The District's goal is to better align water resource priorities with the future land uses designated by the cities. The approved Watershed Management Plan in 2017 will supersede the 2007 plan.

4.4.1.Phosphorus Reduction Strategy

As required by the Minnehaha Creek Watershed District's 2007 Watershed Management Plan, Medina is required to reduce phosphorous loads in its discharge to Painters Creek and Long Lake Creek. Medina's phosphorus reduction strategy consists of the following components:

- Report on phosphorous reduction achieved on projects
- Incorporate stormwater improvements into the CIP
- Target suitable wetland restoration sites
- Stabilize eroding stream/ditch sections
- Street sweeping on City streets
- Implement the post-construction stormwater management ordinance
- Identify opportunities to install phosphorus-reducing BMPs as part of City street reconstruction projects
- Work with developers to construct opportunity-driven stormwater management BMPs as new or redevelopment occurs

Specific phosphorus reduction loads are discussed in Section 4.3.

4.5. Elm Creek Watershed Management Commission (EMWMC)

The 2015 Elm Creek Watershed Management Commission (ECWMC) Third Generation Management Plan has identified the following priorities:

- Providing cost share to Cities to implement projects to achieve WRAPS goals

- Use WRAPS results to establish priority areas and complete subwatershed assessments to determine BMPs
- Develop a model manure management ordinance
- Complete a pilot project for targeted fertilizer application
- Continue to participate in education and outreach activities.

Each of these priorities impacts the City of Medina. Specifically, the Third Generation Plan requires developments that meet the thresholds to comply with the ECWMC Rules and Standards regarding water quality, rate control and volume management. The City of Medina has included policies for rate control and volume management within this SWMP that are as stringent or more stringent then ECWMC.

The ECWMC requires that Medina be responsible for maintenance of stormwater ponds constructed as a part of new development. Medina already fulfills this obligation by implementing their MS4 Stormwater Pollution Prevention Program (SWPPP). This is also reflected as a policy in Section 6 of this plan.

The Elm Creek Watershed TMDL and WRAPS Reports were prepared as part of a "watershed approach" to address the waterbodies still listed as impaired and their corresponding TMDLs. This report looks to support local working groups and jointly develop protection and restoration strategies to be implemented throughout the watershed.

4.6. Pioneer-Sarah Creek Watershed Management Commission (PSCWMC)

The Pioneer-Sarah Creek Watershed Management Commission Third Generation Plan was approved in 2015 and provides an inventory and assessment of water and natural resources, and identifies several key issues. These include water quality, rate control, flooding, impacts of water quality on fish and wildlife, erosion control, and public education. Many issues identified are specific to the City of Medina. This plan identifies goals and policies targeting these issues and establishes implementation actions that may require revisions to their regulatory program or coordination with the watershed to complete Capital Improvement Projects. Medina has prioritized implementation of corrective action based on financial resources available.

Overall the main concern in the City of Medina is in regards to water quality due to impairments to Lake Independence, Spurzem Lake, and Lake Katrina, which are all impaired for excess nutrients. Lake Independence is the only lake with an approved TMDL. Spurzem Lake TMDL study is underway as part of the PSCWMC TMDL report. The report is currently in draft form and expected to be approved by mid-2017. There are two waterbodies outside the jurisdiction of the City located within the Pioneer Sarah Creek Watershed Management Commission (PSWMC) boundaries that receive discharge from the City: Lake Sarah and Lake Rebecca. These are also impaired for excess nutrients.

The Lake Sarah TMDL has been complete and waste load allocations developed. Medina has worked with Three Rivers Park District Staff (technical lead on the TMDL) and the City of Loretto to identify a water quality improvement in response to the TMDL. Other components of Medina's program to address impairments of Lake Rebecca and Lake Sarah are included in the implementation plan of Section 7.

4.7. Wetland Management Standards

In 2008, Medina adopted its own rules for wetland buffers and setbacks, which was based on the FAW. MCWD was selected as a reference for standards, as it has more stringent requirements than the other watershed districts (Elm Creek Watershed District and Pioneer-Sarah Watershed Management Organization).

a. Water Quantity/Quality

The wetland's sensitivity to stormwater input is dependent on the wetland community type and the quality of its plant community. Some wetlands (e.g., sedge meadows with Carex species) are sensitive to disturbance and will show signs of degradation unless water quality, bounce and duration are maintained at pre-existing conditions post-construction. On the other hand, there are other wetlands (e.g., floodplain forests) which are better adapted to handle the fluctuating water levels and influx of sediment often associated with stormwater. Table 4.3 illustrates the Stormwater Susceptibility ratings for different plant community types based on MnRAM 3.0. Wetland protection requirements have been developed to maintain the character of the wetland, and are listed in Table 4.4. BMPs can be used to accomplish many of these pretreatment requirements.

Table 4.3 – Susceptibility of Wetlands to Degradation by Stormwater Impacts[1]

Exceptionally Susceptible Wetland Types:[1]	**Highly Susceptible Wetland Types:[2]**	**Moderately Susceptible Wetland Types:[3]**	**Least Susceptible Wetland Types:[4]**
Sedge Meadows	Shrub-carrs[a]	Floodplain Forests[a]	Gravel Pits
Open Bogs	Alder Thickets[b]	Fresh (Wet) Meadows[b]	Cultivated Hydric Soils
Coniferous Bogs	Fresh (Wet) Meadows[c,e]	Shallow Marshes[c]	Dredged Material/ Fill Material Disposal Sites
Calcareous Fens	Shallow Marshes[c,d]	Deep Marshes[c]	
Low Prairies	Deep Marshes[d,c]		
Lowland Hardwood Swamps			
Seasonally Flooded Wetlands			

[1] *Special consideration must be given to avoid altering these wetland types. Inundation must be avoided. Water chemistry changes due to alteration by stormwater impacts can also cause adverse impacts. Note: All scientific and natural areas and pristine wetland should be considered in this category regardless of wetland type.*

[2] *a., b., c. Can tolerate inundation from 6 inches to 12 inches for short periods of time. May be completely dry in drought or late summer conditions.*
d. Can tolerate +12 inches inundation, but adversely impacted by sediment and/or nutrient loading and prolonged high water levels.
e. Some exceptions.

[3] *a. Can tolerate annual inundation of 1 to 6 feet or more, possibly more than once/year.*
b. Fresh meadows that are dominated by reed canary grass.

c. Shallow marshes dominated by reed canary grass, cattail, giant reed, or purple loosestrife.
[4] *These wetlands are usually so degraded that input of urban storm water may not have adverse impacts.*

---

[1] ***Adapted from:*** *Storm-Water and Wetlands: Planning and Evaluation Guidelines for Addressing Potential Impacts of Urban Storm-Water and Snow-Melt Runoff on Wetlands, State of Minnesota Storm-Water Advisory Group, June 1997.*

Table 4.4 – Wetland Protection Standards

Wetland Stormwater Susceptibility	Permitted Bounce Up to 100 Year Event	Inundation Period for 1 Year Event	Inundation Period for 10 and 100 Year Event	Phosphorus Load Requirements (lbs/yr)
Highly Susceptible	Existing	Existing	Existing	No net increase
Moderately Susceptible	Existing + .5 feet	Existing + 1 day	Existing + 2 days	No net increase
Slightly Susceptible	Existing + 1.0 feet	Existing + 2 days	Existing + 14 days	No net increase
Least Susceptible	No Limit	Existing + 7 days	Existing + 21 days	No net increase

Stormwater susceptibility ratings were determined for each assessed wetland during the FAW. However, the FAW methodology does not accurately account for situations in which a susceptible wetland is dominated by invasive species such as reed canary grass. In these cases, the wetland has already been degraded and a lower protection standard may be appropriate, based on a review of the wetland inventory data for a particular site.

For reviewing purposes, wetlands which are listed as highly or exceptionally sensitive to stormwater impacts and which are also listed as M3 for management class may indicate a susceptible type. Further review of the wetland data will be necessary in these cases to use appropriate protection standards. The quality of a wetland can also be impacted by the phosphorous load flowing into the wetland. The FAW identifies that no net increase of phosphorus loading is allowed into the wetlands. The City has also adopted a more stringent policy where if the existing land cover is natural it is acceptable to maintain existing loading rates, however where the land cover is altered for redevelopment and/or expansion projects, a 20% reduction of phosphorous loading rate will be required. A more stringent percent phosphorous reduction is being developed for new development.

b. Wetland Buffers

The City acknowledges that a buffer of undisturbed vegetation around a wetland or stream can provide a variety of benefits. The buffer can consist of trees, shrubs, grasses, wildflowers, or a combination of plant forms. Buffers reduce the impacts of surrounding land uses on wetland functions by stabilizing soil to prevent erosion; filtering solids, nutrients, and other harmful substances; and moderating water level fluctuations during storms. Buffers also provide essential habitat for feeding, roosting, breeding

and rearing of young birds and animals; and cover for safety, movement and thermal protection for many species of birds and animals. Buffers can reduce problems related to human activities by blocking noise and glare from lights, and reducing disturbance. Even a 10-20 foot buffer (depending on the slope steepness) of tall vegetation can provide some water filtering benefits, but wider buffers provide additional water quality and habitat benefits.

Buffers can be planned to tie important upland habitats to wetlands, or connect wetlands and other waters. Since many animal species require both wetland and upland habitats as part of their life cycles, and also require opportunities to move to escape predators or find food and cover, buffers should be planned to maximize these connections. Buffers will be most effective if the landowners around a wetland make a continuous buffer, and connect desirable wetland and upland habitats.

Specific requirements for wetland buffer widths, standards, triggers, and acceptable uses within the buffer area can be found in the City's Wetlands Conservation ordinance, Section 828.43. Wetland buffers are based on the wetland management class as determined by the FAW, and may be subject to city discretion based on a review of the wetland inventory data for a specific wetland and are also summarized in the table below.

Table 4.5 − Wetland Buffer Standards

Wetland Classification	Upland Buffer Zone Average Width	Minimum Upland Buffer Zone Width	Buffer Setback (Principal Structure)	Buffer Setback (Accessory Structure)
Preserve (at least partly within or adjacent to a MnDNR mapped area)	50 feet	30 feet	15 feet	5 feet
All Other Preserve	35 feet	25 feet	15 feet	5 feet
Manage 1	30 feet	20 feet	15 feet	5 feet
Manage 2	25 feet	20 feet	15 feet	5 feet
Manage 3	20 feet	15 feet	15 feet	5 feet

Stream buffers are established at a 20 foot minimum on all streams identified on the MnDNR Protected Waters Map and a 50 foot requirement is set for all land adjacent to Elm Creek as required by the ECWMC.

c. Wetland Restoration/Enhancement Opportunities

Wetland restoration/enhancement sites were identified during the FAW. Wetlands that have hydrologic restoration proposed may qualify as wetland banking sites if restored.

Wetland banking is a type of mitigation, or replacement for wetland losses, allowed under State and Federal rules. Wetland banking allows the appropriate amount and type of wetland acreage to be purchased from an account holder who has a "bank" of functioning wetlands. These wetlands may have been restored from previously drained or filled wetlands, or created where wetlands did not previously exist. Wetland banking is contrasted with project-specific replacement where the project sponsor creates or restores a wetland specifically to replace a wetland that is to be drained or filled. Project specific replacement is usually done on-site, while wetland banks are typically located in another place in the community or watershed.

Site-specific replacement should be encouraged when a wetland restoration or creation is possible on-site. When site-specific replacements are not ecologically appropriate, then wetland banks located within the City and County should be the next priority. The funding for the wetland restoration sites can

come from a variety of sources, which include:

- BWSR Banking Money for Road Construction Projects;
- Minnesota Department of Natural Resources, Conservation Partners and Community Environmental Partnerships grants;
- Minnesota Department of Natural Resources Greenway grants; and
- Soil and Water Conservation District grants.

4.8. Official Controls

The City of Medina has numerous official controls (Table 3.1) used to regulate stormwater management, erosion and sediment control, shoreland, floodplain and wetlands. These ordinances will be reviewed and revised following the approval of this SWMP. Any conflicts that arise will be addressed to meet the City's goals of protecting water quality and reducing an increase in stormwater runoff volume. The Medina Stormwater Design Guide is adopted by reference into the City ordinances under stormwater management and will be updated at that time as well.

SECTION 5

5. GOALS AND POLICIES

5.1. Summary

The primary goal of Medina's SWMP is to provide a framework for effective surface water management and to bring the City into statutory compliance. This includes guiding redevelopment activities and identifying and implementing retrofits to the existing system. These retrofits consist of both projects and programs. Additionally, the plan provides clear guidance on how Medina intends to manage surface water in terms of both quantity and quality.

The goals and policies described in this section are intended to incorporate the foundation of several regional, state, and federally mandated programs. They are not meant to replace or alter the regional, state and federally mandated programs, rules and regulations, but to serve as an enhancement and provide some general policy guidelines. The goals address the management strategies of each watershed management commission, Pioneer-Sarah Creek, Minnehaha Creek and Elm Creek, and are consistent with the objectives set forth in the State Wetland Conservation Act (WCA) and the Federal Nationwide Urban Runoff Program (NURP) Cooperation, collaboration, and partnering results in projects that are less likely to conflict with the goals of the affected entities, are better able to meet long-term goals, and are generally more cost-effective.

In addition to the goals and policies contained in this section, the City will annually review and update its Storm Water Pollution Prevention Plan (SWPPP) to effectively manage its stormwater system and be in conformance with the NPDES MS4 Program. Refer to Appendix B for the most recent version of the City SWPPP.

This section outlines the goals and policies specific to surface water management in Medina. Goals and policies are grouped by their relationship to the key issues listed below:

- Section 5.2 - Land Development, Redevelopment, and City Projects
- Section 5.3 - Water Resource Management
- Section 5.4 - Management of Floodplains, Shorelands, and Natural Areas
- Section 5.5 - Citywide Program Elements
- Section 5.6 - Support of Other Agencies

5.2. Land Development, Redevelopment, and City Projects

Overall Goal

Manage land disturbance and increased impervious surfaces to prevent flooding and adverse impacts to water resources.

Overall Policies

1. Medina will pursue a non-degradation policy in regard to runoff volume, runoff rate, and nutrient loading from development projects. Low Impact Development (LID) techniques are Medina's preferred method of controlling runoff volume and nutrient loading. Medina considers LID techniques as complementary to pipes, ponds, and wetlands for its flood control system.

2. Medina will consider redevelopment and linear projects as an opportunity to retrofit non-degradation to previously developed areas and infrastructure.

3. Medina will amend or modify its ordinances and/or engineer standards to facilitate stormwater quantity and quality performance measures identified in its Local Surface Water Management Plan.

4. Medina will consider water quality retrofits on existing City properties as a means of providing treatment to currently developed areas without treatment.

5. Medina will reference the following documents as guidance for Best Management Practices in the City: The Minnesota Pollution Control Agency's Protecting Water Quality in Urban Areas and its Minnesota Stormwater Manual, and the Metropolitan Council's Minnesota Urban Small Sites BMP Manual.

5.2.1. Runoff Volume Management

Goal: Maintain existing runoff volumes so that runoff from development does not increase volume loading to wetlands, lakes and streams.

Policy: Any site that requires an NPDES construction site permit will be required to implement permanent volume management such that existing runoff volumes are maintained. Sites that do not require an NPDES construction site permit shall maintain existing runoff volumes to the extent practical.

Policy: Medina's preferred water quality strategy is to reduce the volume of its runoff through infiltration or reuse projects. If volume control is not feasible due to site conditions, the City will establish alternatives to achieve relevant volume control goals. Volume control calculations will be consistent with Medina's Stormwater Design Manual.

Policy: Redevelopment and linear projects will implement runoff volume management practices for net new impervious surfaces. Redevelopment and linear projects will consider whether additional runoff volume management practices might feasibly be incorporated for existing impervious surfaces also.

5.2.2. Runoff Rate

Goal: Control the rate of stormwater runoff from development to reduce downstream flooding and erosion and protect water resources.

Policy: Future peak rates of discharge from new development and redevelopment will not exceed existing peak rates of discharge for the 1-yr or 2-yr, 10-yr and 100-yr 24-hour storm events using Atlas 14 rainfall values. MSE-3 distribution shall be used.

Policy: New storm sewer systems shall be designed using the following guidelines:

New lateral storm sewer systems shall be designed to accommodate discharge rates for the 10-yr critical storm event using Atlas 14 rainfall values. Trunk storm sewer should be designed as a minimum to carry 100-year pond discharge in addition to the 10-year design flow. New storm sewer systems shall be designed to match the inside top elevation of adjacent pipes. The maximum velocity shall not exceed 10 feet per second, except when entering a pond, where the maximum velocity shall be limited to 6 feet per second.

Policy: New storm sewers and open channels shall be designed using the Rational Method or other technical method approved by the City. Runoff Coefficient "C" shall be in accordance with the guidelines provided in the Stormwater Design Manual.

Policy: The City will base all drainage system analyses and designs on proposed full development land use patterns.

Policy: Where development occurs upstream of a known flood-prone area, the City may seek additional rate control as a means to mitigate this flooding.

Policy: When off-site regional ponding is available and this off-site ponding accomplishes the rate control requirement, then the rate control requirement can be waived for a particular site.

5.2.3. Flood Prevention

Goal: Provide adequate storage and conveyance of runoff to protect the public safety and minimize property damage.

Policy: Building low floor elevations within the City of Medina shall be required to be at least 2 feet above the emergency overflow elevation. In areas where this separation is not or cannot be provided, additional analysis is required showing that the 100-year back-to-back storm event does not affect adjacent homes.

Policy: Flood storage for those landlocked depressions with no outlet present must accommodate the volume generated by back-to-back 100-yr, 24-hr storm events or the 100-yr, 10-day snowmelt event, whichever generates the higher calculated HWL.

Policy: The City will encourage, to the extent practicable, implementation of Low Impact Development techniques and mitigation of stormwater runoff volume within development and redevelopment areas draining to landlocked depressions.

Policy: The City shall require that rate control structures and stormwater drainage ways are included in a drainage or utility easement.

Policy: The City will require compensatory storage for any filling in the 1% (100-year) floodplain at a 1:1 ratio.

Policy: Medina will amend or modify its Floodplain Management Ordinance to incorporate the policies identified in its Local Surface Water Management Plan.6

5.2.4. Nutrient and Sediment Loading

Goal: Reduce the nutrient and sediment loads over current conditions.

Policy: Medina's minimum standard is water quality treatment that meets the requirements of the NPDES construction site permit. Under no circumstances shall overall treatment fall below the requirements of this permit.

Policy: Any site that requires a NPDES construction site permit will be required to reduce phosphorus loadings over current conditions. The water quality control standard shall be considered satisfied if the volume control standards has been satisfied, as defined in the City's Stormwater Design Manual. If volume control is infeasible due to site constraints, a 20% reduction in phosphorus loading over existing conditions will be required for redevelopment projects. In cases where existing land cover is natural, the maintenance of existing loading rates is acceptable if the minimum requirements identified in the policy above are met.

Policy: Medina will institute a standard practice of evaluating all development, redevelopment, and linear projects for opportunities to retrofit water quality treatment to areas without significant existing treatment.

Policy: Guidelines for the design of water quality ponds and infiltration/filtration practices will follow the requirements listed in the City's Stormwater Design Manual.

Policy: The City will require outlet skimming in all water quality ponds. Skimming shall occur for up to the 10-year, 24-hour event. The City shall not allow the use of submerged pipes to provide skimming.

Policy: The City will require the use of its standard outlet structure (Appendix G) for new water quality ponds.

5.2.5. Erosion and Sediment Control

Goal: Prevent sediment from construction sites from entering the City's surface water resources.

Policy: The City will enforce the Construction Site Storm Water Runoff Control Ordinance as outlined in Chapter 8 of the City Code; Section 828 Performance Standards and Enforcement.

Policy: Erosion control must meet the requirements outlined in the Minnesota Pollution Control Agency's NPDES General Permit to Discharge Stormwater from Construction Sites and the following criteria. A copy of the most recent requirements can be found at www.mpca.mn.us.

Policy: The City will periodically review its Construction Site Storm Water Runoff Control Ordinance to maintain conformance with the NPDES construction permit, the City's MS4 permit, guidance from Metropolitan Council and the requirements of the watershed management organizations.

5.3. Water Resource Management

Overall Goal

Protect the City's wetlands, lakes, streams and groundwater to preserve the functions and values of these resources for future generations.

Overall Policies

1. The City will protect water resources through implementation of the Wetland Conservation Act, groundwater protection rules and TMDL studies.

2. The City will look to retrofit rate control, water quality treatment, and runoff volume reduction upstream of existing water bodies, as these opportunities arise. Medina considers Low Impact Development techniques as the preferred means of retrofitting water quality treatment and runoff volume reduction.

5.3.1. Wetland Management

Goal: Protect and preserve wetlands to maintain or improve their function and value.

Policy: The City will continue to administer WCA responsibilities within the City to ensure no net loss of wetland functions and values.

Policy: The City will administer their WCA responsibilities using technically trained staff. At a minimum the trained staff will be certified by the Minnesota Wetland Delineator Certification Program and/or a comparable program.

Policy: The City will work collaboratively with the relevant WMO in the application of City and WMO policies and performance standards for wetlands.

Policy: The City will implement the Wetland Protection Ordinance, City Code 828.43, which incorporates the results of the City's Wetland Inventory and Assessment.

Policy: The City will require that, prior to development activities or public projects, a wetland delineation must be completed, including a field delineation and report detailing the findings of the delineation.

Policy: The City requires through its wetland ordinance that future development proposals include natural buffer zones around wetlands and streams. Buffer areas should not be mowed or fertilized, except that harvesting of vegetation may be performed to reduce nutrient inputs.

Policy: The City requires that runoff be pre-treated prior to discharge to wetlands. Wetlands may not be considered as treatment areas for the purposes of meeting Medina's stormwater management standards. Direct roof runoff that is discharged to a wetland without pretreatment will be reviewed by the City.

5.3.2. Lake Management

Goal: Manage lakes to improve water quality and protect resource values.

Policy: The City will begin implementing the TMDL Implementation Plans listed in Section 2. Through its annual reporting, the City will report progress toward meeting this phosphorus load reduction.

Policy: The City will cooperate with the Three Rivers Park District, Pioneer-Sarah Creek Watershed, Elm Creek Watershed, and Minnehaha Creek Watershed to identify possible activities to improve water quality in impaired waterbodies.

5.3.3. Stream Management

Goal: Improve water quality, provide wildlife habitat and protect the resource value of streams.

Policy: The City will work with the ECWMC to facilitate implementation of the outcomes of the Elm Creek Channel Study.

Policy: The City will cooperate with the PSCWMC and the ECWMC to remove deadfall from creeks within the City.

Policy: The City will require a 50 foot buffer for land disturbance projects along Elm Creek.

5.3.4. TMDL Implementation

Goal: Address target pollutants identified in TMDL studies to improve the quality of impaired waters.

Policy: The City will implement the pollutant reduction strategies identified in the SWPPP.

Policy: The City will incorporate completed TMDL studies and relevant implementation projects.

Policy: The City will use the findings of the TMDL studies to guide development review.

Policy: The City will consider Low Impact Development techniques as the primary means of meeting load reductions identified in TMDL implementation plans.

5.3.5. Groundwater Recharge and Protection

Goal: Protect groundwater resources and groundwater dependent resources.

Policy: The City will cooperate with Hennepin County, MDH, and other state and federal agencies to identify areas of groundwater resources critical to protect.

Policy: The City will use the guidance developed in the Minnesota Stormwater Manual for locating infiltration BMPs in vulnerable Wellhead Protection Areas.

5.4. Management of Floodplains, Shorelands, and Natural Areas

Overall Goal

Manage the City's floodplains, shorelands and natural areas to preserve the functions and values of these resources for future generations.

Overall Policy

The City will manage these areas through implementation of local zoning codes and agency regulations.

5.4.1. Floodplain Management

Goal: Control development in flood prone areas to protect the public safety and minimize property damage.

Policy: The City will regulate land development within the Floodplain District to ensure that floodplain capacity and flood elevations are not adversely impacted by development, and that new structures are protected from damage.

Policy: The City will update the Floodplain Management Ordinance, City Code 826.74 as required by FEMA and the MnDNR, or as needed, to ensure adequate protection for structures and eligibility for flood insurance programs.

5.4.2. Shoreland Management

Goal: Conserve and protect the scenic, historical and cultural resources of the waterbodies within the City and maintain a high standard of environmental quality.

Policy: The City will regulate land development within the Shoreland Overlay District to minimize impacts as specified in the City Code 827.01.

5.4.3. Natural Area Management

Goal: Protect and enhance natural areas within the City to provide wildlife habitat and water resource benefits.

Policy: The City will review land use and development decisions with the intent to preserve natural resources, connect environmental corridors and provide buffers for streams, wetlands and lakes. Existing MLCCS coverage and other data sources will guide decisions regarding natural area preservation. Figure 18 shows parcels owned by the City. These parcels will be reviewed to possibly enhance natural areas and provide water resource benefits.

Policy: The City will support programs to maintain and restore the resource value of natural areas.

Policy: The City will continue to implement its Open Space Plan and will coordinate with the

Parks Department on future development.

Policy: The City will cooperate with the MCWD to implement conservation practices for those areas identified in the MCWD CWRMP as Key Conservation Areas.

Policy: The City will coordinate conservation efforts with other agencies, such as watersheds, Hennepin County, Three Rivers Park and non-governmental bodies, like the Minnesota Land Trust, Embrace Open Space and Pheasants Forever.

Policy: The City will require permanently conserved land to be held in an easement by an outside agency, such as the Minnesota Land Trust, a watershed district or similar entities.

5.5. City Wide Program Elements

Overall Goal

Manage water resources and drainage systems on a citywide scale.

Overall Policies

1. The city wide surface water management program will include monitoring and maintenance of drainage systems, targeted pollution prevention, public education, system reconstruction projects and equitable collection of supporting funds.

2. The City will actively implement the NPDES Stormwater Pollution Prevention Plan as stated in the MS4 permit.

3. The City will work with the Watershed having jurisdiction and applicable LGU to resolve any intercommunity drainage issues that may arise.

5.5.1. Pollution Prevention

Goal: Detect and address urban pollutants discharged to storm sewers.

Policy: The City will address pollutant sources through enforcement of codes and public education.

Policy: The City will develop and maintain an effective spill response plan.

Policy: The City will continue to develop and update their storm sewer system on an annual basis.

Policy: The City will complete employee training in the operation, maintenance and inspection of stormwater facilities, as included in the SWPPP.

Policy: The City will monitor storm sewer outfalls for pollutants as outlined in the City's NPDES permit.

5.5.2. Monitoring and Maintenance

Goal: Maintain the function and effectiveness of stormwater management structures through monitoring and maintenance.

Policy: The City will continue to conduct annual street sweeping of City owned streets. Rural road sections will be swept at least once annually and the urban road sections will be swept at least three times annually.

Policy: The City will inspect and monitor the construction and installation of all new stormwater facilities and require that such facilities be surveyed to create as-built drawings.

Goal: Ensure the long term operation and maintenance of stormwater management BMPs.

Policy: The City will require that all ponds constructed as part of a common plan of development be placed on outlots.

Policy: The City will require that all ponds be returned to their original design capacity prior to acceptance by the City and that an as-built design be submitted to verify that the pond meets the original design capacity.

Policy: The City will require developers to provide a minimum one-year guarantee that stormwater management facilities are properly installed, maintained and functioning.

Policy: The City will require that an operation and maintenance plan for the proposed stormwater management BMPs be submitted for all development and redevelopment projects.

5.5.3. Public Education

Goal: Inform and educate residents about stormwater pollution, the effects of urban runoff and the need to protect natural resources.

Policy: The City will implement a public education and outreach program as identified in the City's NPDES permit.

Policy: The City will develop and maintain a public education program for landowners to promote reduction of nutrient, sediment, and bacteria loading to water bodies. The City will encourage residents and landowners to practice environmental friendly lawn care and to encourage the use of native plantings or natural landscapes, where practical.

Policy: The City will coordinate public education work with the local WMOs.

Policy: The City will promote citizen and volunteer efforts to protect, restore and enhance local water and natural resources.

Policy: The City will use available opportunities through its public meetings, website, City newsletter, Comprehensive Plan, or interpretive elements at parks and open space sites to inform its residents about the value of local water resources, the effects of stormwater runoff, and opportunities for stewardship of water and natural resources.

5.5.4. Funding

Goal: Secure adequate funding to support implementation of the surface water management plan.
Policy: The City will cost effectively manage the plan to balance surface water goals with available resources.

Policy: The City will seek grant funds or other resources to assist with special projects or implementation of plan goals.

Policy: The City will utilize the Stormwater Utility Fund to pay for stormwater management projects and implementation activities.

5.6. Support of Other Agencies

Overall Goal:
Coordinate local surface water management with the work of watershed management organizations and state agencies.

Overall Policy:
The City will cooperate and collaborate with the local water management organizations in their efforts to maintain and improve water quality in the city.

Goal: Facilitate WMO review of development projects and enforcement of watershed standards.

Policy: Policy: Medina will coordinate development review activities with the watershed organizations with jurisdictions overlapping that of the City.

Goal: Cooperate with other organizations to complete and implement management plans and studies for water resources in Medina.

Policy: The City will work with local watershed management organizations, Hennepin County, and others when appropriate and as resources are available to participate in resource management plans or studies that benefit water and natural resources.

Policy: The City will work with the local watershed management organizations to jointly implement the LSWMP.

Goal: Cooperate with other organizations working to protect groundwater resources.

Policy: The City will cooperate with the County and water management organizations to implement the recommendations of the Hennepin County Groundwater Plan, to protect groundwater quality by reducing the potential for transport of stormwater pollutants into the groundwater, and maintaining the functions of groundwater recharge areas.

Policy: The City will support well-sealing programs developed by Hennepin County and the Minnesota Department of Health.

6. IMPLEMENTATION PROGRAM

6.1. Overview

Medina developed its implementation program to address issues identified earlier in this Local Surface Water Management Plan. This program reflects the needs and concerns of many stakeholders including the City Council, City Staff, citizens, and watershed management organizations. The program also considers Medina's ability to fund these items through its general levy, environmental fund, or stormwater utility. The implementation program consists of the following components:

- Capital Improvements (CIP)
- NPDES MS4 Permit Compliance (MS4)
- Operation and Maintenance (OM)
- Official Controls (OC)

Capital Improvements consist of "on-the-ground" projects intended to remedy issues identified as current problems. The capital projects focus on phosphorus reduction within the following regulated areas:

- Lake Independence Subwatershed (approved TMDL)
- Lake Sarah Subwatershed (approved TMDL)
- Upper Minnehaha Creek Watershed (approved TMDL)
- Elm Creek Watershed (approved TMDL and WRAPS)
- Pioneer-Sarah Creek Watershed (draft TMDL)
- Painters Creek Subwatershed (MCWD phosphorus reduction strategy)
- Long Lake Subwatershed (MCWD phosphorus reduction strategy)

NPDES MS4 Permit Compliance refers to activities necessary to meet Medina's obligations under its general permit coverage. These activities primarily include annual meetings, SWPPP updates, and SWPPP implementation.

Operation and Maintenance items consist primarily of the general maintenance of Medina's drainage system including ponds, storm sewer, and culverts. Operation and maintenance overlaps somewhat with Medina's MS4 obligations in that certain operation and maintenance activities are specified in the City's SWPPP.

Official Controls include ordinance and policy revisions intended to achieve water quality benefits. Each proposed implementation item has a specific driver, which are identified in the tabulated implementation program later in this section. The overarching goal of Medina's implementation

program is quite simple: to improve the quality of its surface waters, its surface water discharge, and to achieve sustainable site development practices. However, there are some very specific regulatory drivers that refine this general goal. These are discussed below. The City Ordinances and Stormwater Design Guide will be assessed and updated as needed following this SWMP approval.

6.2. Current City Practices

Current City Practices are best summarized in the Medina Stormwater Pollution Prevention Program or SWPPP attached to this Local Surface Water Management Plan as an Appendix. These current practices provide water quality benefits through the operation of Medina's Public Works Department. Current practices are fully described in the SWPPP of Appendix B and are summarized here:

- Floor drain containment program
- Hazardous materials storage program
- Landscaping and lawn care practices
- Sanitary sewer maintenance and inspection program
- Municipal street maintenance program (street sweeping)
- Structural MS4 pollution control device inspection and maintenance program
- Street deicing program
- ESC standards during all municipal land disturbance projects
- Outfall and pond inspection program for all City owned MS4 systems
- Storm drain system cleaning
- Stockpile, storage and material handling program
- Municipal employee training program

As with any proposed changes to City practices, those identified above will be constrained by funding – particularly the funding of the stormwater utility. Medina allocates stormwater utility funds to water quality improvements on capital projects as well, so the challenge for the City is finding the right balance between capital improvements and programmatic/training outlays. Nonetheless, improved housekeeping practices will improve the water quality of the City's surface water discharge in the following ways:

- Reduced chloride in runoff from spring snowmelt.

- Less sediment in waterways due to increase street sweeping and incorporation ESC standards into their municipal programs. Street sweeping will remove approximately 2 lbs/year of phosphorus draining to the surface waters.

- Maintenance of stormwater facilities results in maintaining their designed removal efficiencies.

- Less trash and debris in ditches reduces bank erosion and sediment discharge. A reduction in bank erosion and sediment discharge will reduce phosphorus anywhere from 18-30 lbs/year.

- More staff trained in spill response means less likelihood of chemical spills into surface waters.

- Training in fertilizer and pesticide application means a reduction in phosphorus and other chemicals in Medina's runoff.

- The Wellhead Protection Plan will inform the City on the proper use and location of infiltration BMPs.

Each of these practices will be reviewed regularly to identify necessary improvements and how each are benefiting water resources in the City.

6.3. 10-Year Implementation Plan Priorities

Table 6.1 presents Medina's Implementation Program. Medina's program from the issues identified within this LSWMP's current assessment section. More importantly, the Implementation Program aligns with Medina's goals and policies as presented in Section 6. Table 6.1 presents implementation items in each of the four functional areas of Capital Improvements (CIP), NPDES MS4 (MS4), Operation and Maintenance (OM), and Official Controls (OC). The implementation program incorporates Medina's Storm Water Pollution Prevention Plan (SWPPP) through direct reference of items that have a financial impact. Medina will update the implementation program in conjunction with its annual NPDES MS4 public meeting.

6.4. Financial Considerations

The City will use funds generated from its Stormwater Utility as the primary funding mechanism for its implementation program including; maintenance, repairs, capital projects, studies, etc. Medina's current stormwater utility fee structure provides approximately $206,216 per year. If funds from this utility fee do not cover necessary costs, the City will consider adjusting the Stormwater Utility Fee to cover the costs associated with the implementation program. The City will continue to review the stormwater utility fee annually and adjust based on the stormwater related needs of the City and other available funding mechanisms. The City will also take advantage of grant or loan programs to offset project costs where appropriate and cost-effective. Below is a list of various sources of revenue that the City will attempt to utilize:

- Grant monies possibly secured from various agencies. This could include MCWD, Hennepin County, Mn/DOT, the MPCA, the MnDNR, Legislative-Citizen Commission on Minnesota Resources (LCCMR), the Board of Water and Soil Resources (BWSR),and others.
- Special assessments for local improvements performed under authority of Minnesota Statutes Chapter 429.
- Revenue generated by Watershed Management Special Tax Districts provided for under Minnesota Statutes Chapter 473.882.
- Project funds could be obtained from watershed district levies as provided for in Minnesota Statutes Chapter 103D.905 for those projects being completed by or in cooperation with MCWD or PSCWMC.
- Developer funds.
- Other sources potentially including tax increment financing, tax abatement, state aid, and others.

SECTION VI

TABLE 6.1

SURFACE WATER MANAGEMENT IMPLEMENTATION PLAN

No.	Project Description	15 Year Total Cost Estimate [1,3]	Watershed District[4]	Possible Funding Sources [2]	Proposed Cost By Year[1]															Comments
					2017	2018	2019	2020	2021	2022	2023	2024	2025	2026	2027	2028	2029	2030	2031	
1**	Ardmore Lake wetland restoration- Wetland restoration project according to the Ardmore Area Subwatershed Assessment	$96,500	Pioneer-Sarah	Stormwater Utility						$96,500										
2**	Lake Independence shoreline restoration- Restore shoreline erosion along Lake Independence.	$17,500	Pioneer-Sarah	Stormwater Utility/Special Assessment			$17,500													
3**	Fern street gully restoration- Stablizing the gully to prevent sediment discharge.	$18,850	Pioneer-Sarah	Stormwater Utility			$18,850													
4	Long Lake Creek Subwatershed Common Carp Study-Phase 1	$62,000	Minnehaha Creek	Hennepin County/MCWD/ Grants		$10,000	$6,500	$6,500	$6,500	$6,500	$6,500	$6,500	$6,500	$6,500						
5**	Gully restoration in partnership with Three Rivers Park District.	$25,000	Pioneer-Sarah	Stormwater Utility		$25,000														
6**	Take the Loretto sewer ponds offline and connect to the MCES system.	$5,000	Pioneer-Sarah	Stormwater Utility			$5,000													
7**	Hydrologic/hydraulic studies to establish Base Flood Elevations (BFE) for FEMA mapped waterbodies in PSCWMC and ECWMC. (MCWD has BFEs established)	$50,000	Pioneer-Sarah, Elm Creek	Stormwater Utility	$10,000	$10,000	$10,000	$10,000	$10,000											
8**	Expand education program for benefits of water reuse for irrigation throughout the City.	$15,000	All	Stormwater Utility	$1,000	$1,000	$1,000	$1,000	$1,000	$1,000	$1,000	$1,000	$1,000	$1,000	$1,000	$1,000	$1,000	$1,000	$1,000	
9	Baker Ravine- See City CIP for details	$31,500	Pioneer-Sarah	Stormwater Utility, Grants, Environmental Fund		$31,500														
10	Hickory Improvements - Includes land acquisition. See City CIP for details.	$100,000	Elm Creek	Stormwater Utility, Grants, Environmental Fund		$100,000														
11	Ardmore Projects	$10,525	Pioneer-Sarah	Stormwater Utility, Grants, Environmental Fund		$10,525														
12	Tomahawk Trail wetland restoration.	$87,500	Pioneer-Sarah	Stormwater Utility									$43,750	$43,750						

SECTION VI

No.	Project Description	15 Year Total Cost Estimate [1,3]	Watershed District[4]	Possible Funding Sources [2]	Proposed Cost By Year[1]															Comments
					2017	2018	2019	2020	2021	2022	2023	2024	2025	2026	2027	2028	2029	2030	2031	
SWPPP (FROM OLD SWPPP)																				
13	Annual NPDES Permit and SWPP Updates	$58,500	N/A	SWU	$3,900	$3,900	$3,900	$3,900	$3,900	$3,900	$3,900	$3,900	$3,900	$3,900	$3,900	$3,900	$3,900	$3,900	$3,900	
14	Informational tasks, newsletter, website, administrative, etc.	$165,000	N/A	SWU	$11,000	$11,000	$11,000	$11,000	$11,000	$11,000	$11,000	$11,000	$11,000	$11,000	$11,000	$11,000	$11,000	$11,000	$11,000	
15	Inspections of illicit discharges, ponds, storm sewer and culverts	$187,500	All	SWU	$12,500	$12,500	$12,500	$12,500	$12,500	$12,500	$12,500	$12,500	$12,500	$12,500	$12,500	$12,500	$12,500	$12,500	$12,500	
16	Yard waste disposal site (fuel and labor)	$180,000	All	SWU	$12,000	$12,000	$12,000	$12,000	$12,000	$12,000	$12,000	$12,000	$12,000	$12,000	$12,000	$12,000	$12,000	$12,000	$12,000	
17	Goose prevention education and removal	$15,000	All	SWU	$1,000	$1,000	$1,000	$1,000	$1,000	$1,000	$1,000	$1,000	$1,000	$1,000	$1,000	$1,000	$1,000	$1,000	$1,000	
18	Pioneer-Sarah Creek membership dues (TMDL related)	$150,000	N/A	SWU	$10,000	$10,000	$10,000	$10,000	$10,000	$10,000	$10,000	$10,000	$10,000	$10,000	$10,000	$10,000	$10,000	$10,000	$10,000	
19	Horse and manure management education	$15,000	All	SWU	$1,000	$1,000	$1,000	$1,000	$1,000	$1,000	$1,000	$1,000	$1,000	$1,000	$1,000	$1,000	$1,000	$1,000	$1,000	
CIP																				
20	Rain garden implementation program	$150,000	All	Stormwater Utility, Grants, Environmental Fund	$10,000	$10,000	$10,000	$10,000	$10,000	$10,000	$10,000	$10,000	$10,000	$10,000	$10,000	$10,000	$10,000	$10,000	$10,000	

SECTION VI

No.	Project Description	15 Year Total Cost Estimate [1,3]	Watershed District[4]	Possible Funding Sources [2]	Proposed Cost By Year[1] 2017	2018	2019	2020	2021	2022	2023	2024	2025	2026	2027	2028	2029	2030	2031	Comments
Monitor and Study																				
21**	Evaluate options to address flooding on the NE quadrant of Medina Road and Tamarack Drive.	$15,000	Elm Creek	Stormwater Utility					$15,000											
22**	Evaluate options to address flooding on Tamarack Road south of CSAH 24.	$15,000	Minnehaha Creek	Stormwater Utility							$15,000									
23**	Evaluate options to address flooding on Willow Drive south of CSAH 24.	$15,000	Minnehaha Creek	Stormwater Utility									$15,000							
24	Partner with MCWD on School Lake internal load management	$97,500	Minnehaha Creek	Stormwater Utility	$6,500	$6,500	$6,500	$6,500	$6,500	$6,500	$6,500	$6,500	$6,500	$6,500	$6,500	$6,500	$6,500	$6,500	$6,500	
25**	Cooperate with DNR, MCWD to assess local erosion in Wolsfeld Woods that may contribute to lake sediment loads.	$20,000	Minnehaha Creek	Stormwater Utility										$20,000						
	TOTAL	$1,602,875			$78,900	$255,925	$126,750	$85,400	$100,400	$171,900	$90,400	$75,400	$134,150	$139,150	$68,900	$68,900	$68,900	$68,900	$68,900	

[1] Cost estimates are preliminary and subject to review and revision as engineer's reports are completed and more information becomes available. Table reflects 2016 costs and does not account for inflation. Costs generally include labor, equipment, materials, and all other costs necessary to complete each activity. Some of the costs outlined above may be included in other operational costs budgeted by the City.

[2] Funding for stormwater program activities projected to come from following sources - Surface Water Management Fund, Developers Agreements, Grant Funds, General Operating Fund, or Special Assessments.

[3] Staff time is not included in the cost shown.

[4] Relevant TMDLs for each project is listed in Section 4, Table 4.1.

**Denotes high priority projects to address TMDL requirements

7. ADMINISTRATION

7.1. Review and Adoption Process

Review and adoption of this Surface Water Management Plan will follow the procedure outlined in Minnesota Statutes 103B.235:

'After consideration but before adoption by the governing body, each local government unit shall submit its water management plan to the watershed management organization[s] for review for consistency with the watershed plan adopted pursuant to section 103B.231. The organization[s] shall have 60 days to complete its review.'

'Concurrently with its submission of its local water management plan to the watershed management organization, each local government unit shall submit its water management plan to the Metropolitan Council for review and comment. The council shall have 45 days to review and comment upon the local plan. The council's 45-day review period shall run concurrently with the 60-day review period by the watershed management organization. The Metropolitan Council shall submit its comments to the watershed management organization and shall send a copy of its comments to the local government unit.'

'After approval of the local plan by the watershed management organization[s], the local government unit shall adopt and implement its plan within 120 days, and shall amend its official controls accordingly within 180 days.'

7.2. Collaboration with Watershed Entities

7.2.1. General

Once Minnehaha Creek Watershed, Pioneer-Sarah Creek Watershed, and Elm Creek Watershed have reviewed and approved this Local Surface Water Management Plan, Medina will meet with the watersheds to come to an understanding regarding implementation of the plan. Before and after approval of this plan, Medina will continue close coordination with all three watershed organizations in the review of projects with their respective jurisdictions.

The City will annually report to MCWD, PSCWMC, and ECWMC activities is has undertaken in the previous year in implementation its plan and in progress toward meeting water quantity, water quality, and ecological integrity goals. The City will also report progress in areas covered under relevant TMDL implementation plans with each entity.

7.2.2.Minnehaha Creek Watershed Coordination Plan

The MCWD requests that local government units establish a coordination plan that the LGU and MCWD can implement at a staff level to achieve common goals. Some of these goals include maintaining awareness of needs and opportunities between Medina and MCWD and implementing programs and projects that meet the needs of all partners, align financially, and are a part of the overall watershed planning effort. Improving coordination between land use planning at the City and watershed planning at MCWD will result in better projects to meet agency goals and a more efficient use of public funds. Coordination and collaboration between entities is key to constructing cost effective BMPs to manage water quality concerns and preserve the City's natural resources in the future.

The following is a summary of the coordination plan, which will be adjusted and expanded as deemed appropriate by the City and MCWD during project implementation:

- Annual meeting – Staff members will meet during the summer to review NPDES MS4 reports and activity from the previous year. Staff will also discuss draft Capital Improvement Plans for each entity for the upcoming year. It is anticipated that the City Administrator, Public Works Director and City Planner will be the primary contacts for the annual meeting.

- Land Use Planning – City Planning staff will continue to route requests for land use approvals including, but not limited to, subdivisions and site plan reviews to MCWD staff for comment. Coordination will occur in the beginning stages of the project during the concept plan review.

- Regulatory activities – Planning staff will require documentation of appropriate MCWD construction and land alteration permits for those projects located within District boundaries as a condition to City approval. Approved MCWD permits will be stored with other project documentation for future reference. Staff will consider additional coordination for erosion control inspection and enforcement and discuss opportunities at future annual meetings.

- Wetland Conservation Act enforcement – The City is the LGU for Wetland Conservation Act (WCA) applications and will continue to involve MCWD staff on Technical Evaluation Panels. Alison Harwood with WSB and Associates is currently the City's wetland scientist responsible for coordinating WCA enforcement. Applications are submitted to the Planning Department.

- Funding – The City seeks support from MCWD in terms of grant funding for water quality projects. The City requests that MCWD staff continue to provide information about upcoming grants and other funding opportunities.

- Data Sharing – City staff members will coordinate with MCWD staff to share any new or relevant data on an annual basis to ensure consistency. This data could be related to any newly completed studies, water quality monitoring, BMP performance monitoring, etc.

- Public Improvement Projects – City staff members will provide yearly updates on plans for public improvement projects. This will be coordinated as part of the annual meeting while discussing the draft Capital Improvement Plan. Maintenance activities for stormwater infrastructure will be provided to MCWD as part of the MS4 recording process and City inspection reports.

7.3. Plan Amendments and Future Updates

The City may need to revise this Plan to keep it current. Any significant amendments that are made to the plan must be submitted to the MCWD, PSCWMC, and ECWMC for review and approval before adoption by the City. The City anticipates updating the Implementation Plan annually. These changes will be submitted to the WDs and WMOs for their record, but not for review and approval. The City may amend this plan at any time in response to a petition by a resident or business. Written petitions for plan amendments must be submitted to the City Administrator. The petition must state the reason for the requested amendment, and provide supporting information for the City to consider the request. The City may reject the petition, delay action on the petition until the next full plan revision, or accept the petition as an urgent issue that requires immediate amendment of the plan. The City of Medina may also revise/amend the plan in response to City-identified needs. This Plan is intended to be in effect for 10

years (implementation program outlines cost/activities for 15 years) per state statute. The Plan will be updated at that time, to the extent necessary.

APPENDIX A

Figures

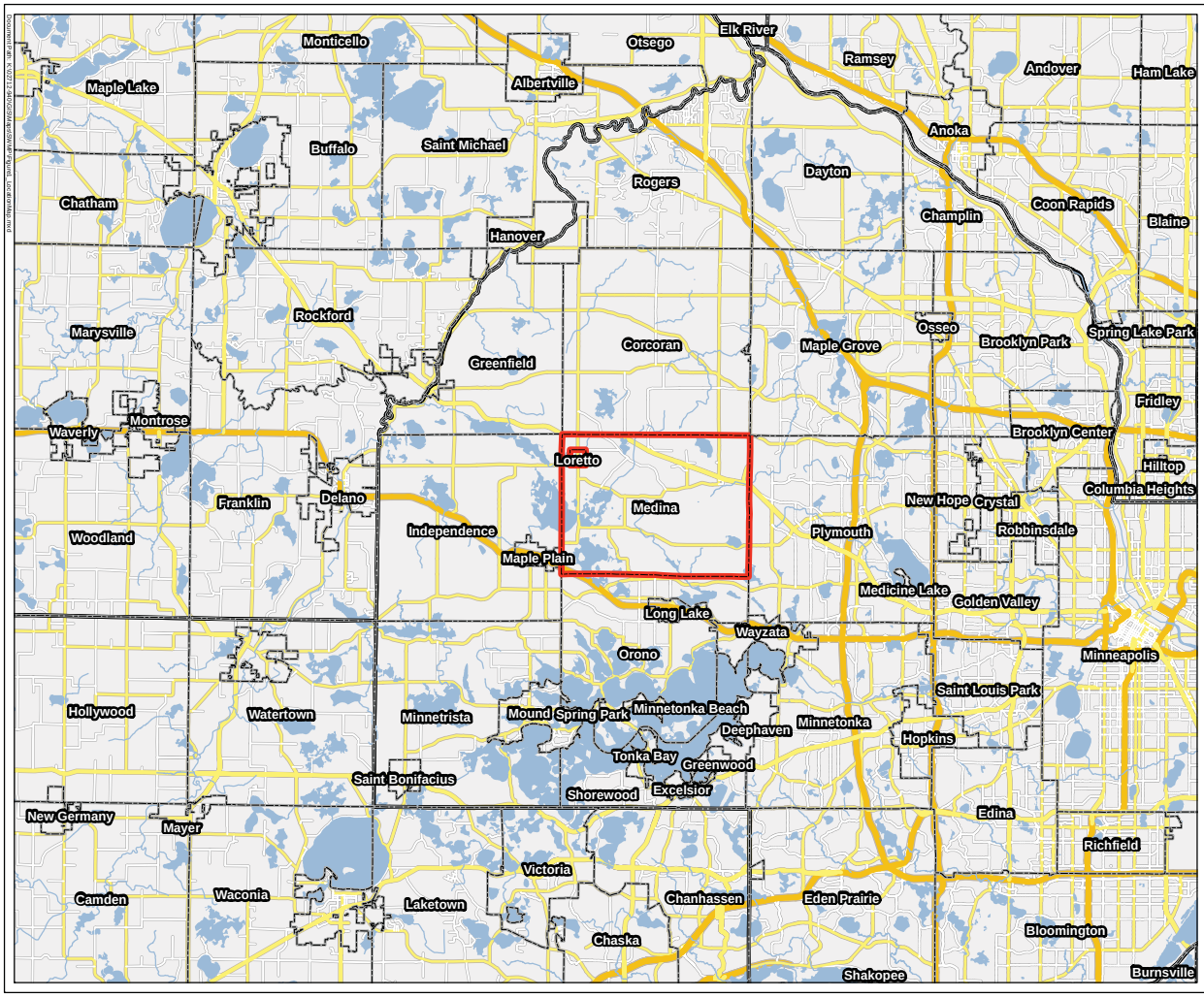

CITY OF MEDINA

Figure 1: Location Map

Medina's Surface Water Management Plan Medina, MN

- Medina Boundary
- City/Township Boundary
- County Boundary
- Lakes
- Streams/Rivers

N

0 3 Miles

WSB

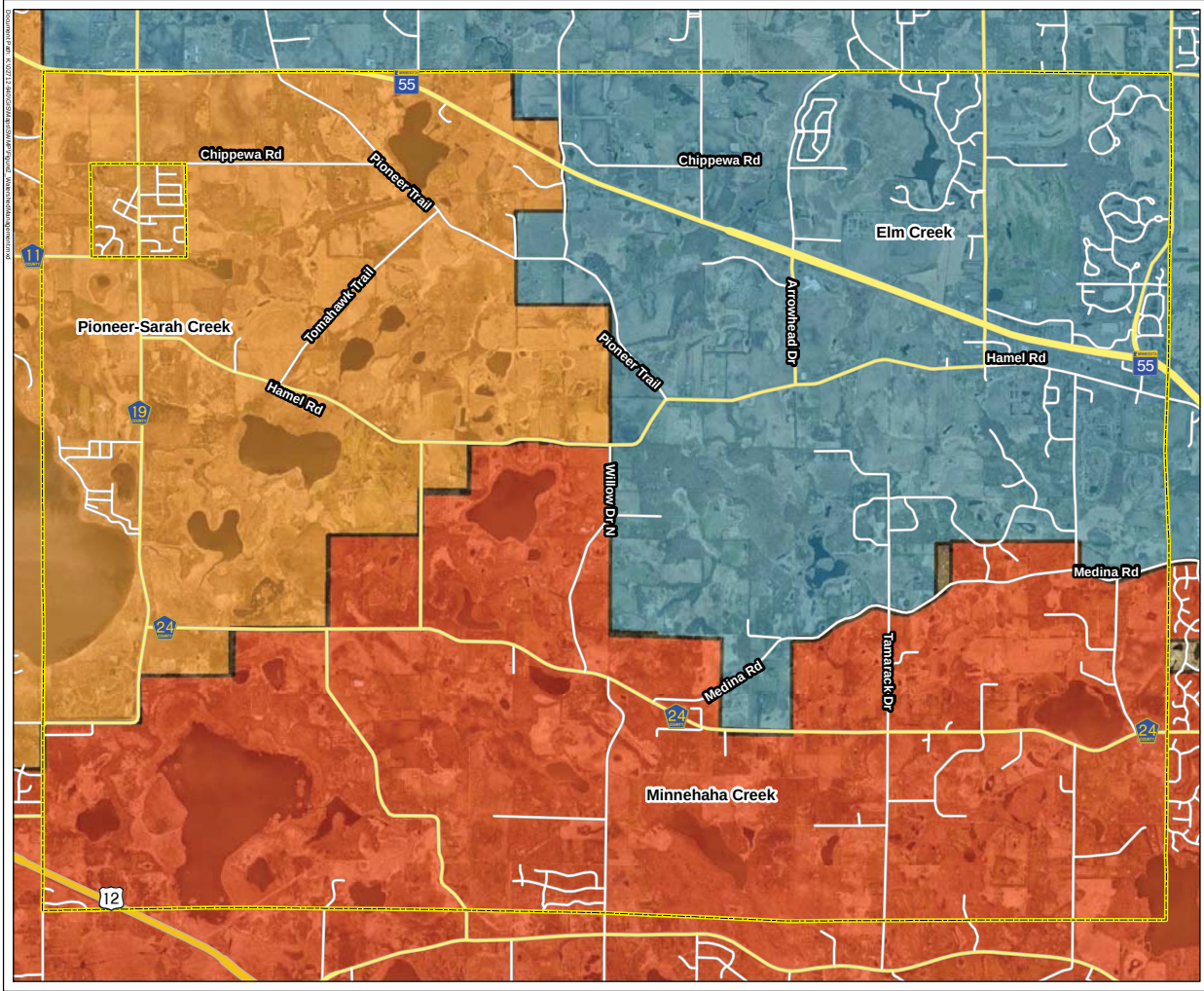

CITY OF MEDINA

Figure 2- Watershed Management Organization having Jurisdiction within the City of Medina

Medina's Surface Water Management Plan Medina, MN

- Medina Boundary
- Watershed Management Organizations
  - ELM CREEK
  - MINNEHAHA CREEK
  - PIONEER-SARAH CREEK

N

0 2,650 Feet

WSB

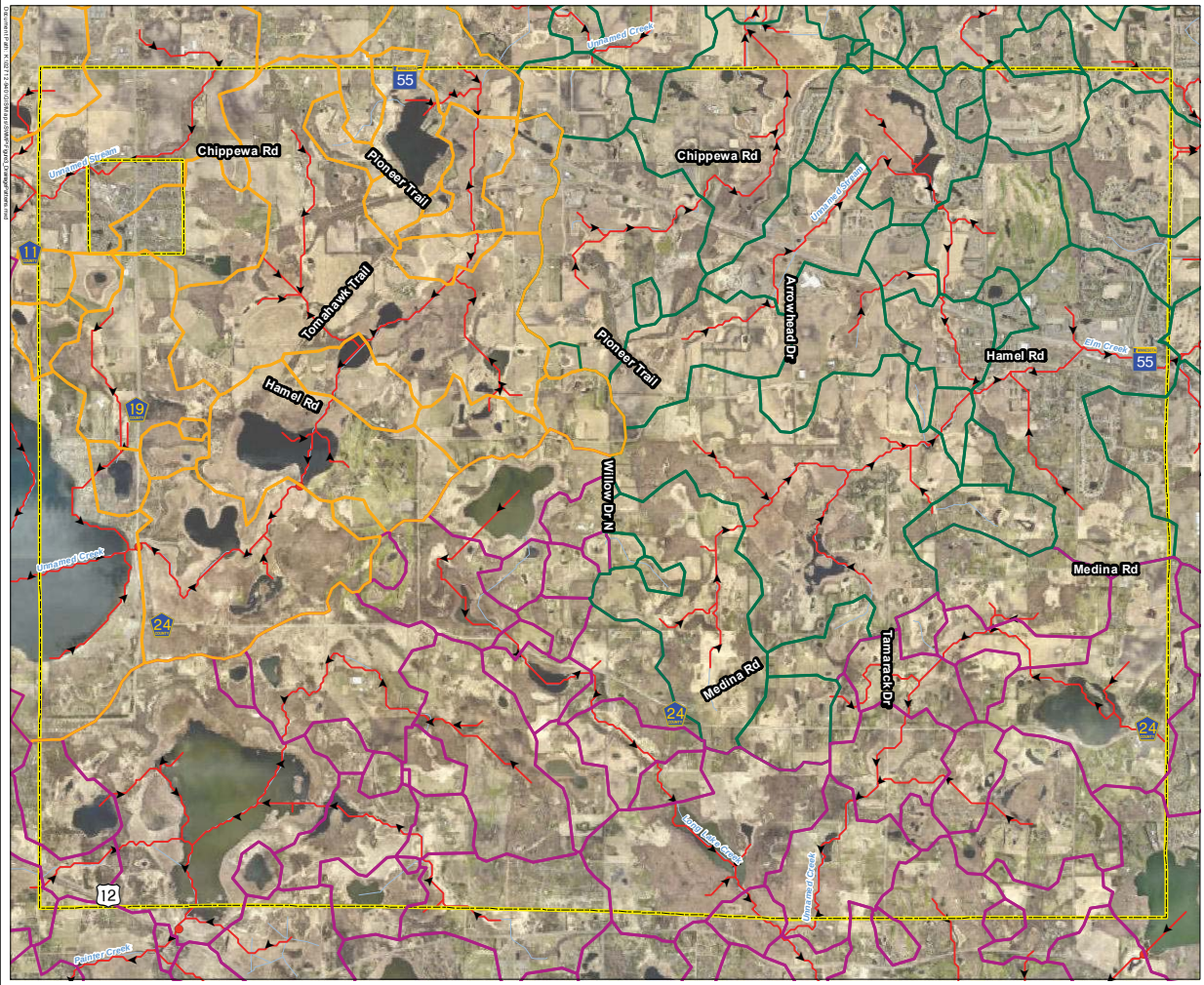

CITY OF MEDINA

Figure 3- Medina's Drainage Patterns

Medina's Surface Water Management Plan
Medina, MN

WD
- ECWMC
- MCWD
- PSCWMC
- Medina Boundary
- Catchment Pour Points
- Catchment Flow Network (synthetic)
- Streams

N

0 2,650 Feet

WSB

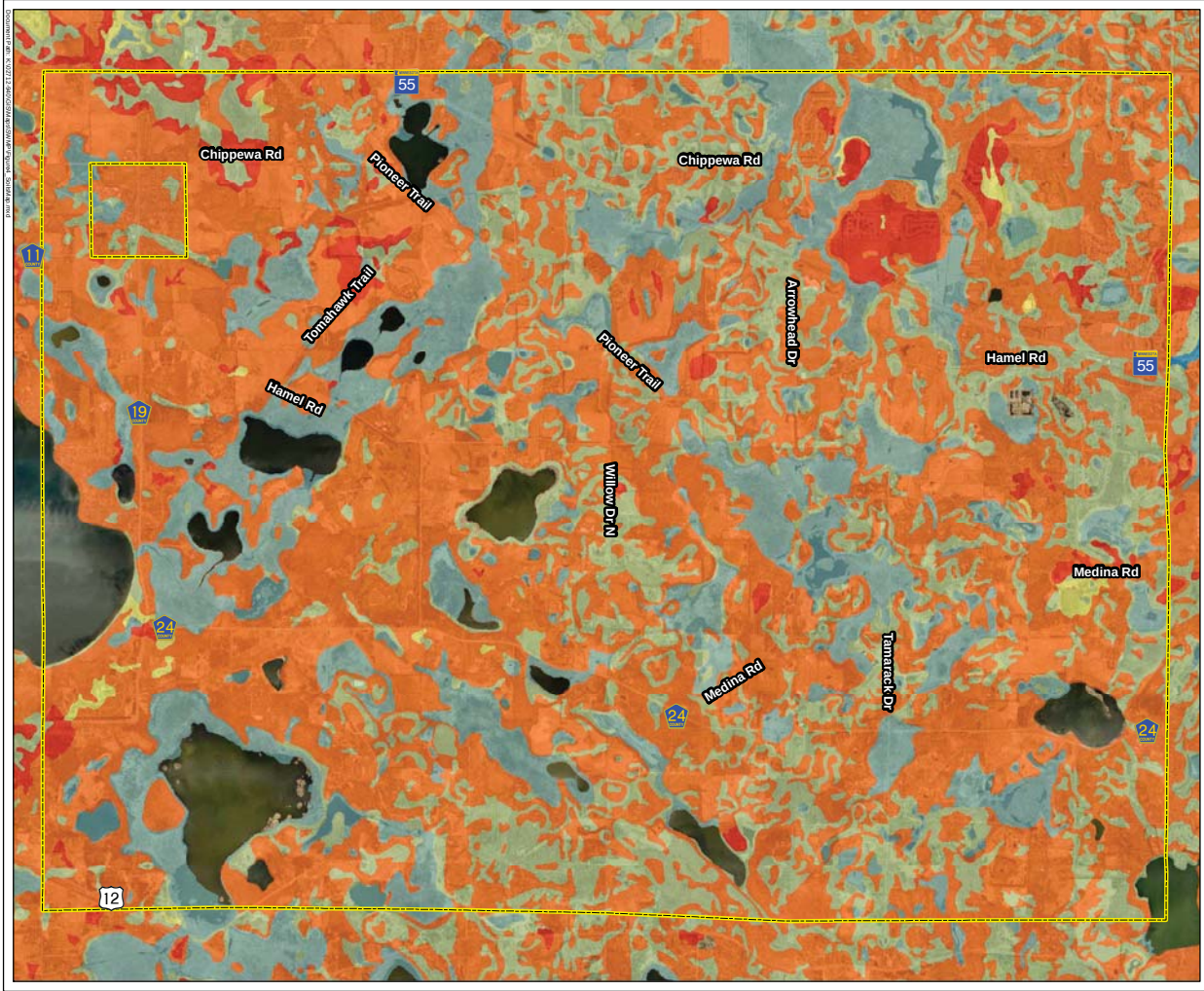

CITY OF MEDINA

Figure 4- Medina's Soil Types

Medina's Surface Water Management Plan Medina, MN

- Medina Boundary

Soils Hydric Group

- A
- A/D
- B
- B/D
- C
- C/D
- D

N

0 2,650 Feet

WSB

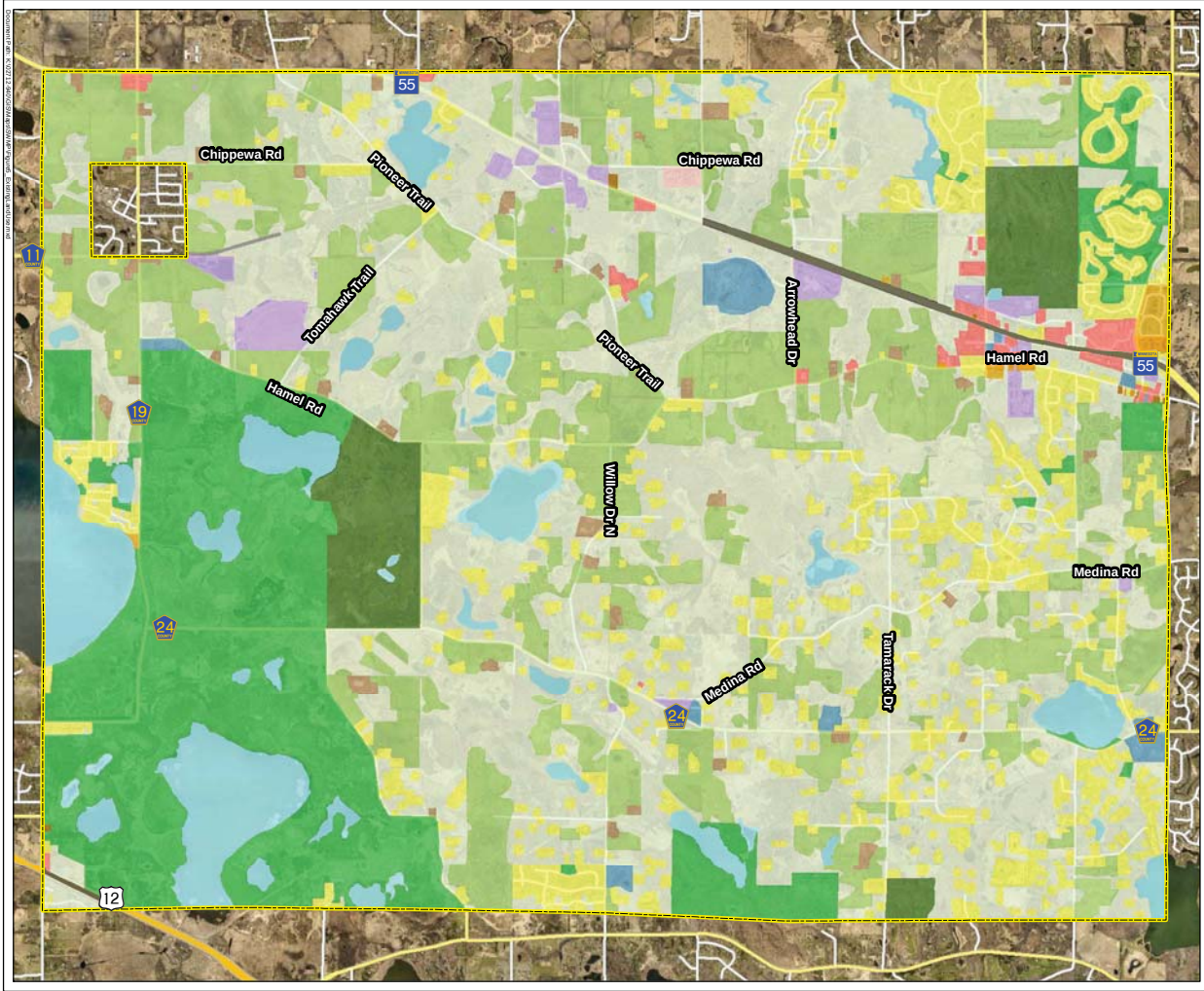

CITY OF MEDINA

Figure 5- Medina's Existing Land Use

Medina's Surface Water Management Plan Medina, MN

- Medina Boundary

2010 Existing Land Use

- Agricultural
- Farmstead
- Golf Course
- Industrial and Utility
- Institutitional
- Major Highway
- Mixed Use Residential
- Multifamily
- Office
- Open Water
- Park, Recreational, or Preserve
- Railway
- Retail and Other Commercial
- Single Family Attached
- Single Family Detached
- Undeveloped

N

0 2,650 Feet

WSB

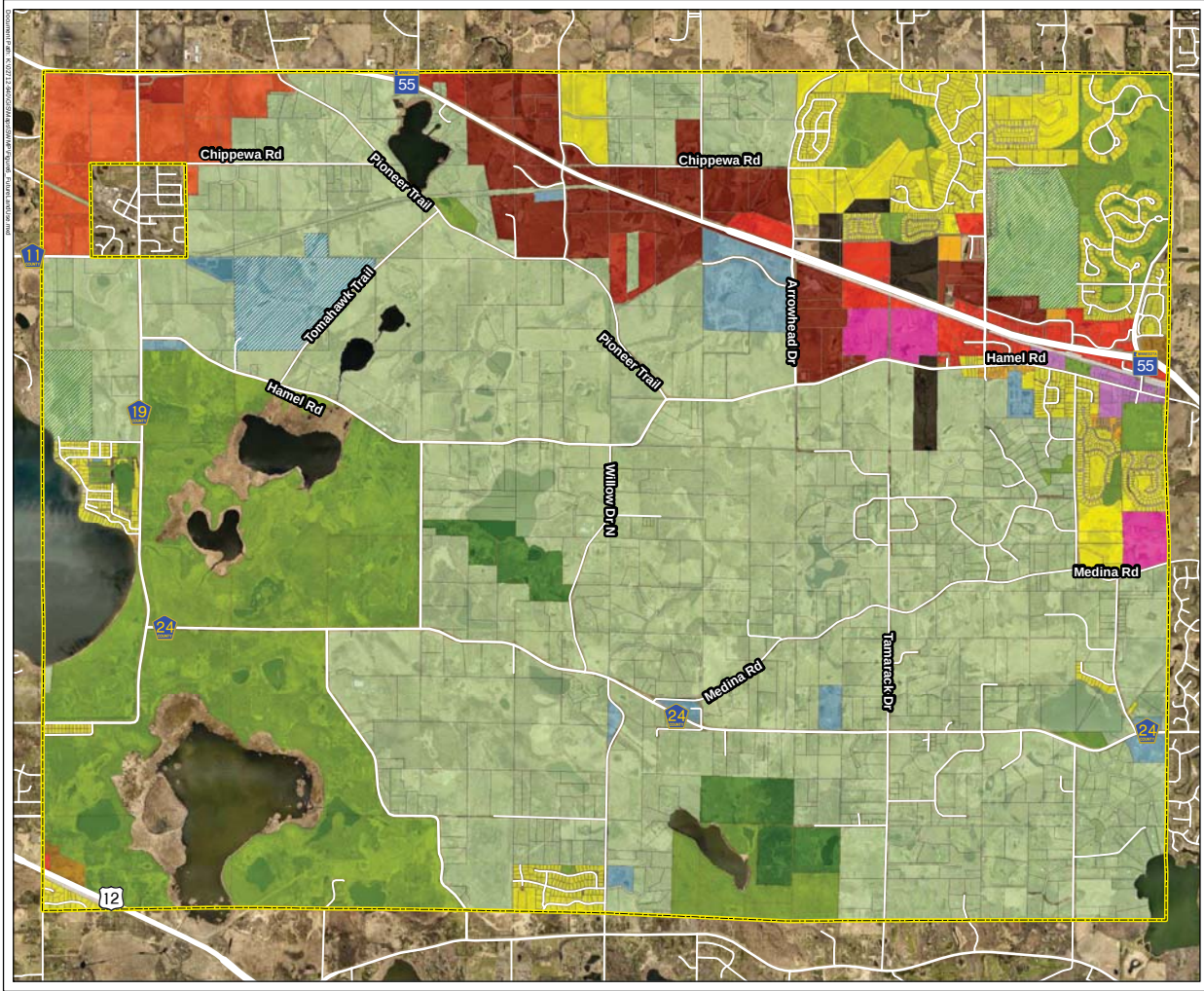

CITY OF MEDINA

Figure 6- Medina's Future Land Use

Medina's Surface Water Management Plan Medina, MN

- Medina Boundary

2040 Future Land Use

- Agricultural
- Future Development Area
- Low Density Residential
- Medium Density Residential
- High Density Residential
- Mixed Residential
- Commercial
- Business
- Institutional
- Multiple
- Private Recreation
- Parks, Recreation and Open Space
- Rural Commercial
- Rural Residential
- Uptown Hamel
- Closed Sanitary Landfill
- Right-of-Way

N

0 2,650 Feet

WSB

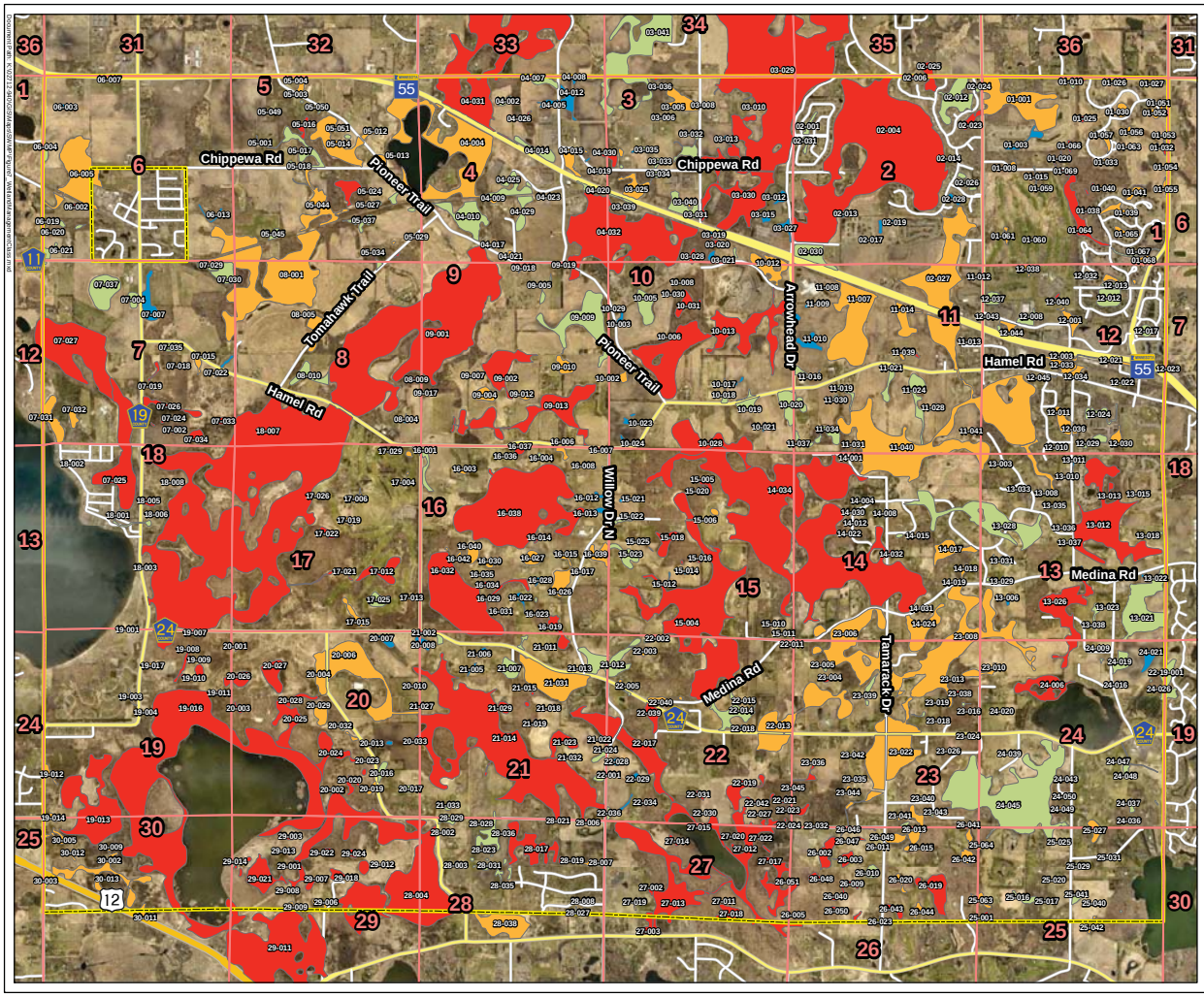

CITY OF MEDINA

Figure 7- Medina's Wetland Management Class

Medina's Surface Water Management Plan Medina, MN

- Medina Boundary
- Section Line

Wetland Management Class

- Protect
- Manage 1
- Manage 2
- Manage 3

N

0 2,650 Feet

WSB

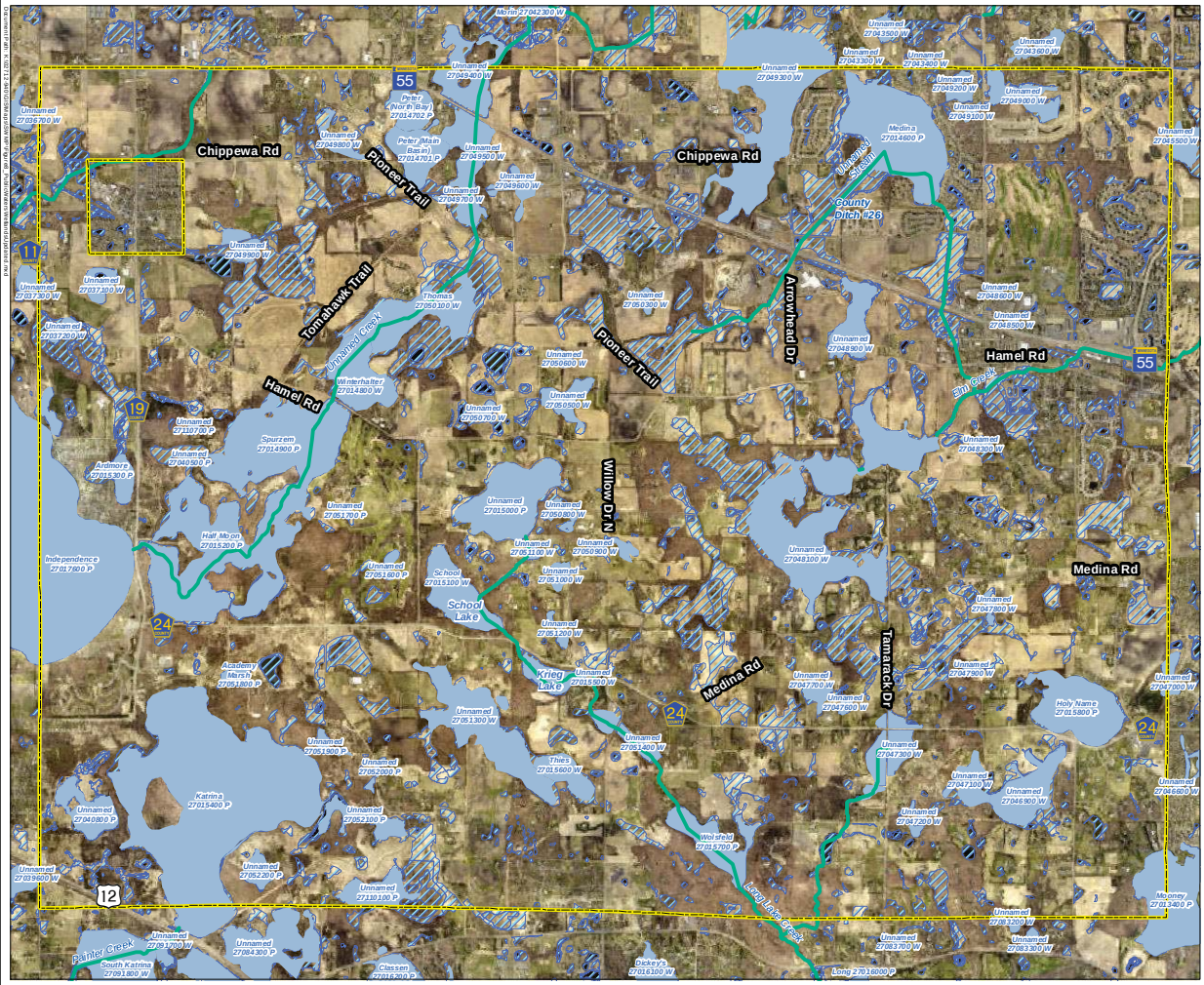

CITY OF MEDINA

Figure 8- Medina's MnDNR Public Water & Wetlands Map

Medina's Surface Water Management Plan
Medina, MN

- DNR Protected Watercourses
- National Wetland Inventory
- MnDNR Public Waters
- **Medina Boundary**

N

0 2,650 Feet

WSB

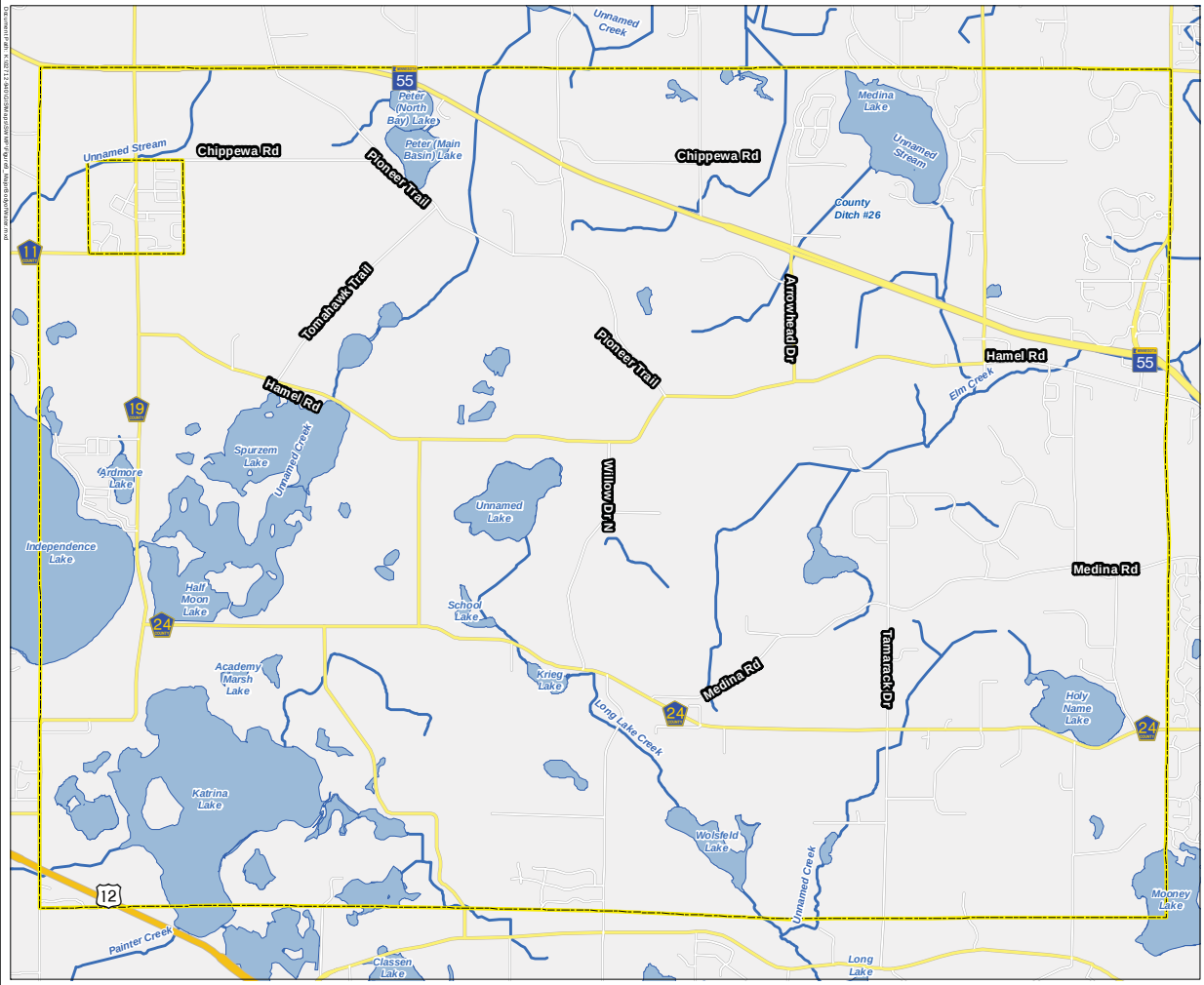

CITY OF MEDINA

Figure 9- Medina's Major Bodies of Water

Medina's Surface Water Management Plan Medina, MN

- Medina Boundary
- Lakes
- Streams

N

0 2,650 Feet

WSB

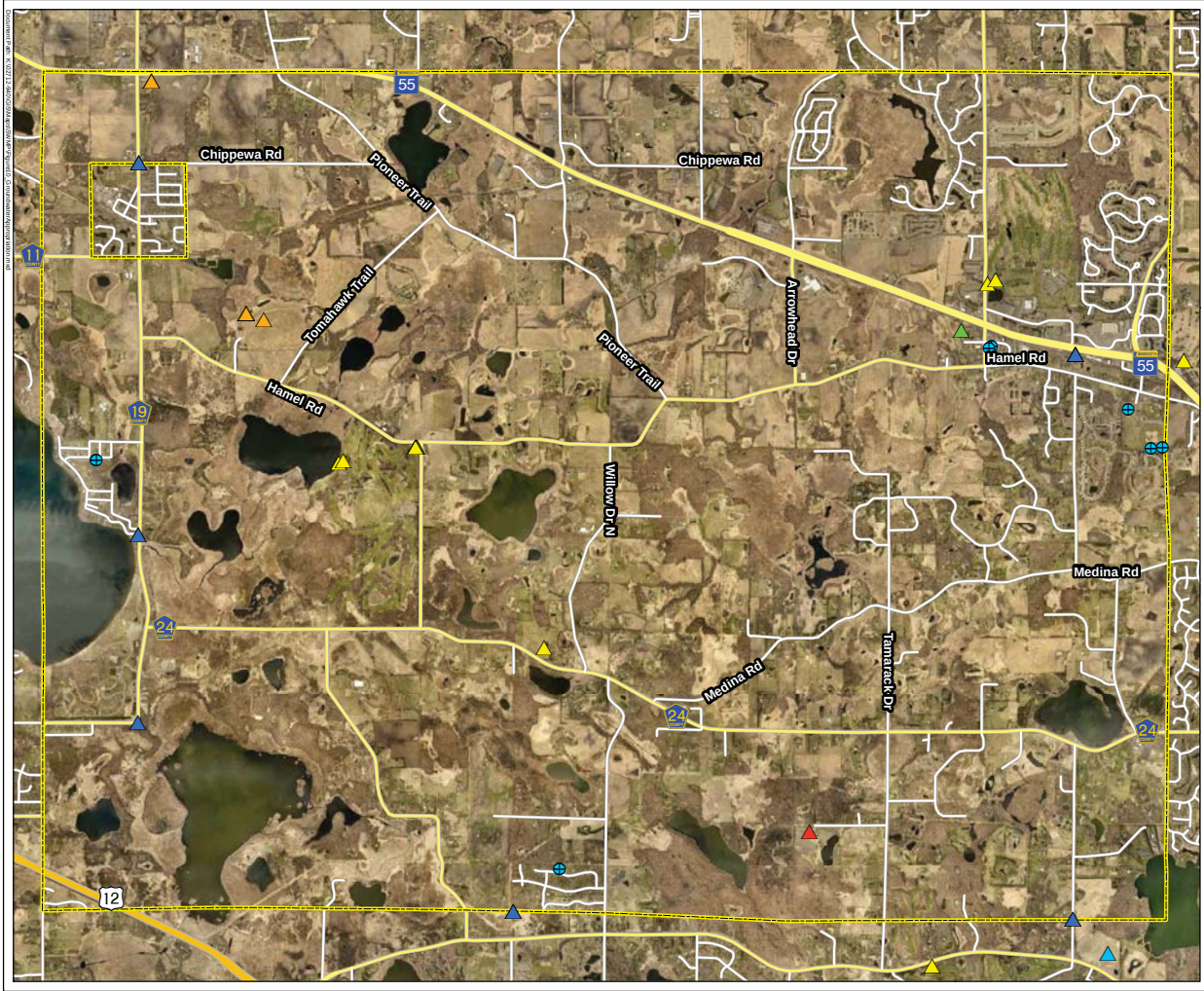

CITY OF MEDINA

Figure 10- Medina's Groundwater Appropriation Locations Map

Medina's Surface Water Management Plan
Medina, MN

- Medina Boundary
- City Wells

Appropriation Locations

Category

- Major Crop Irrigation
- Non-Crop Irrigation
- Special Categories
- Temporary
- Water Level Maintenance
- Waterworks

N

0 2,650 Feet

WSB

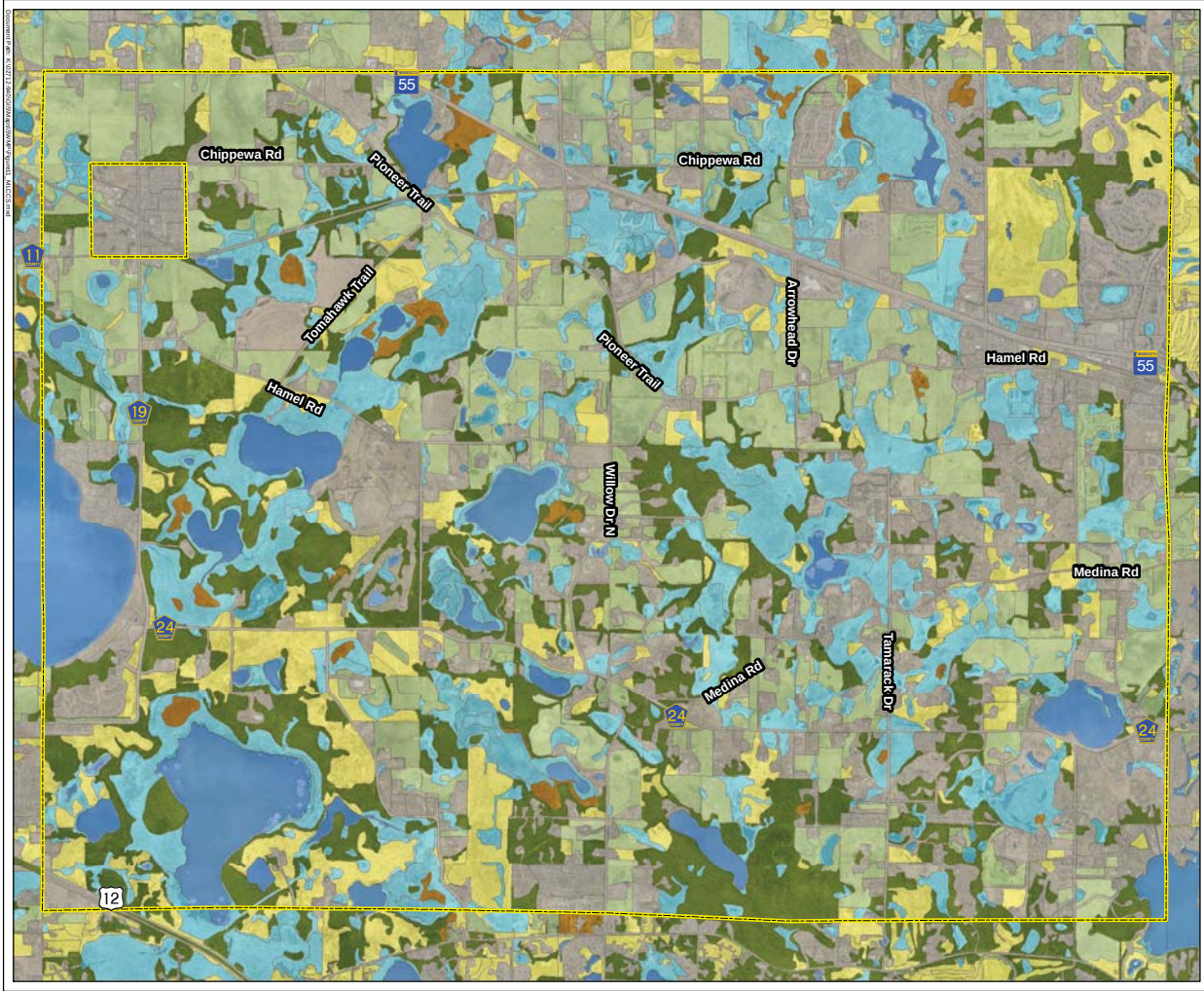

CITY OF MEDINA

Figure 11- Medina's MLCCS Coverage Map

Medina's Surface Water Management Plan Medina, MN

- Medina Boundary
- MLCCS Type
  - Developed Area
  - Planted/Cultivated
  - Forest
  - Herbaceous
  - Shrubland
  - Wetlands
  - Water

N

0 2,650 Feet

WSB

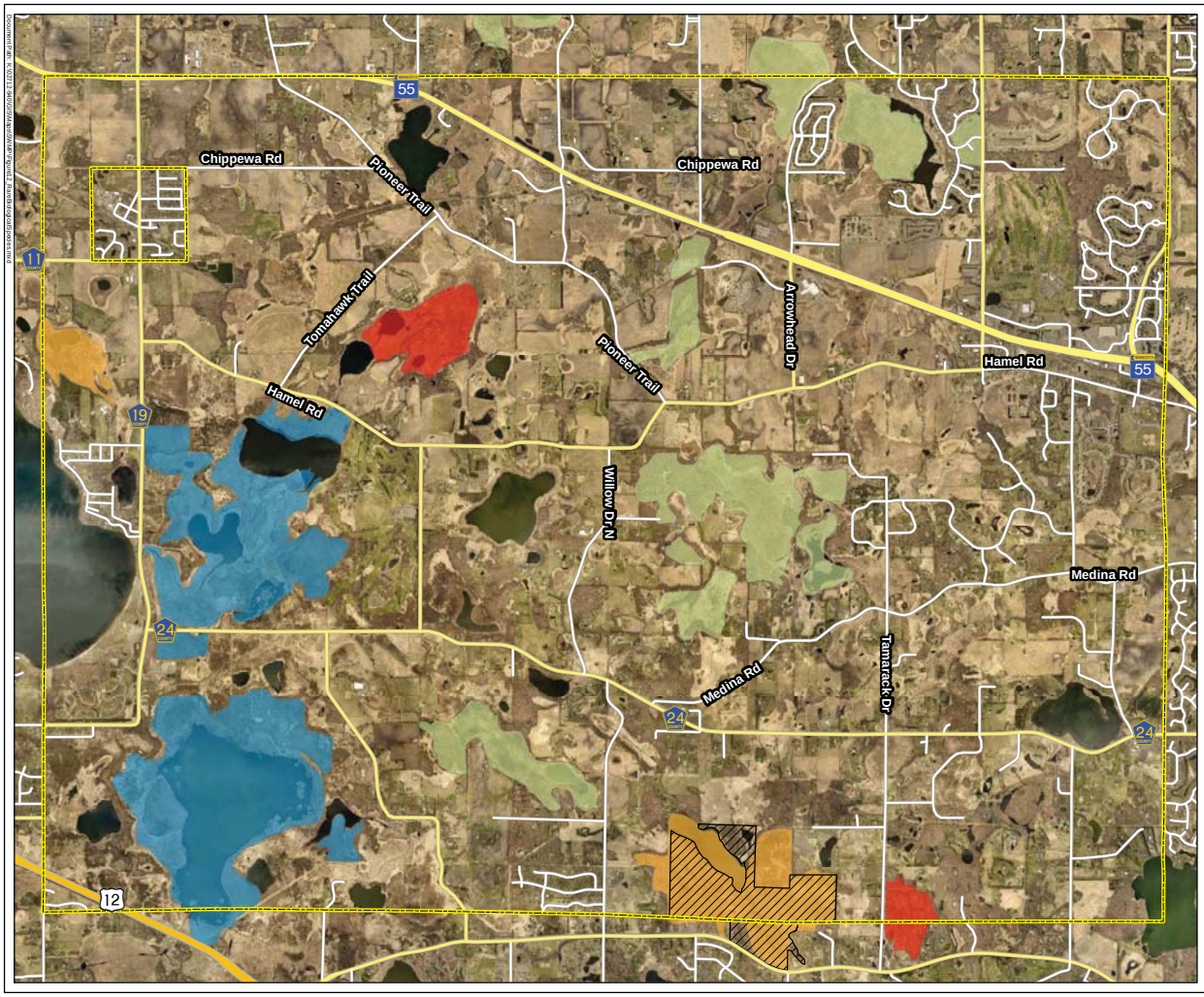

CITY OF MEDINA

Figure 12- Medina's MnDNR Rare Biological Species

Medina's Surface Water Management Plan Medina, MN

- Medina Boundary
- Scientific and Natural Area

Biodiverstiy Significance

- Outstanding
- High
- Moderate
- Below

N

0 2,650 Feet

WSB

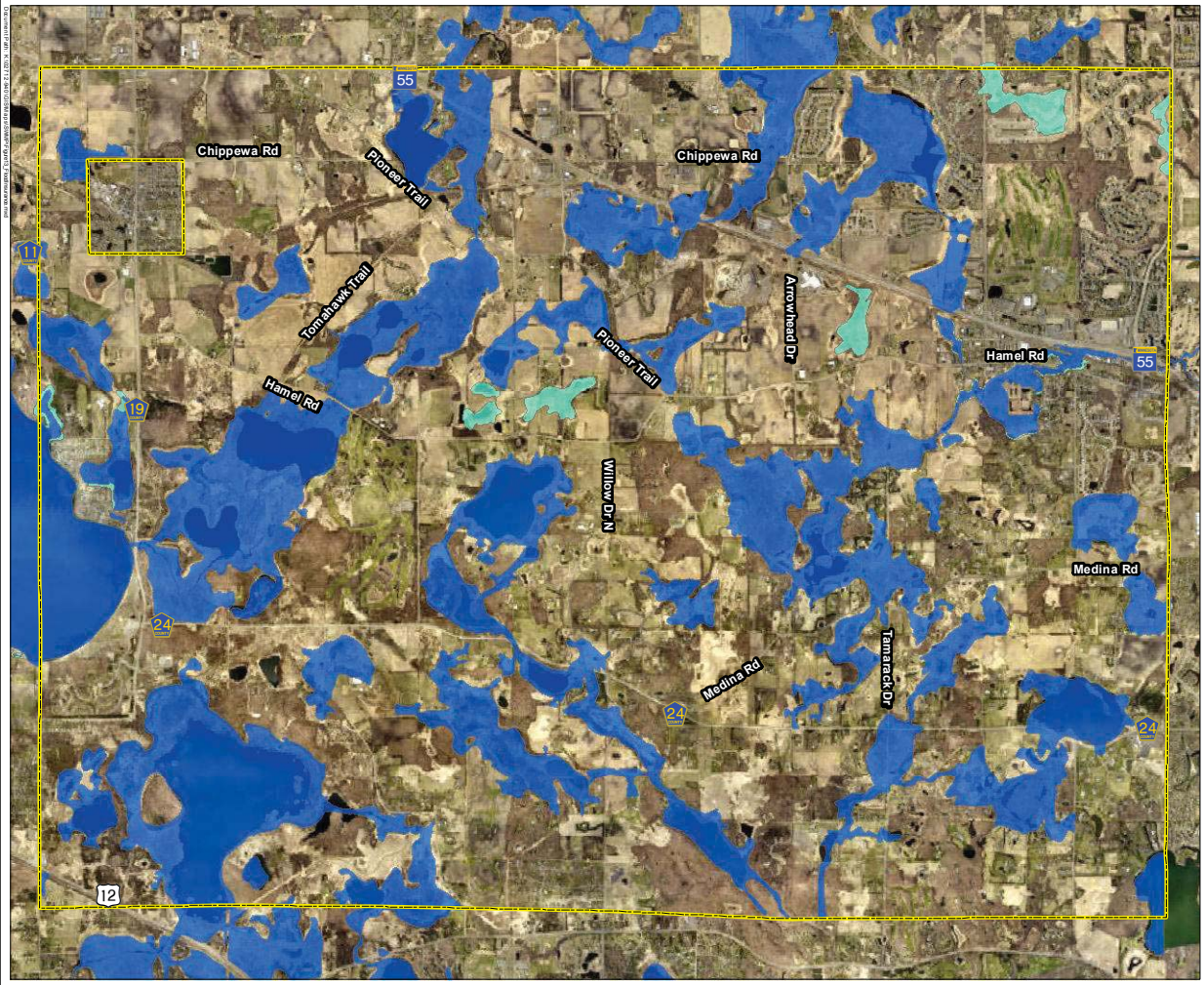

CITY OF MEDINA

Figure 13- FEMA Floodplain

Medina's Surface Water Management Plan Medina, MN

Medina Boundary

Floodplain

100-year

500-year

N

0 2,650 Feet

WSB

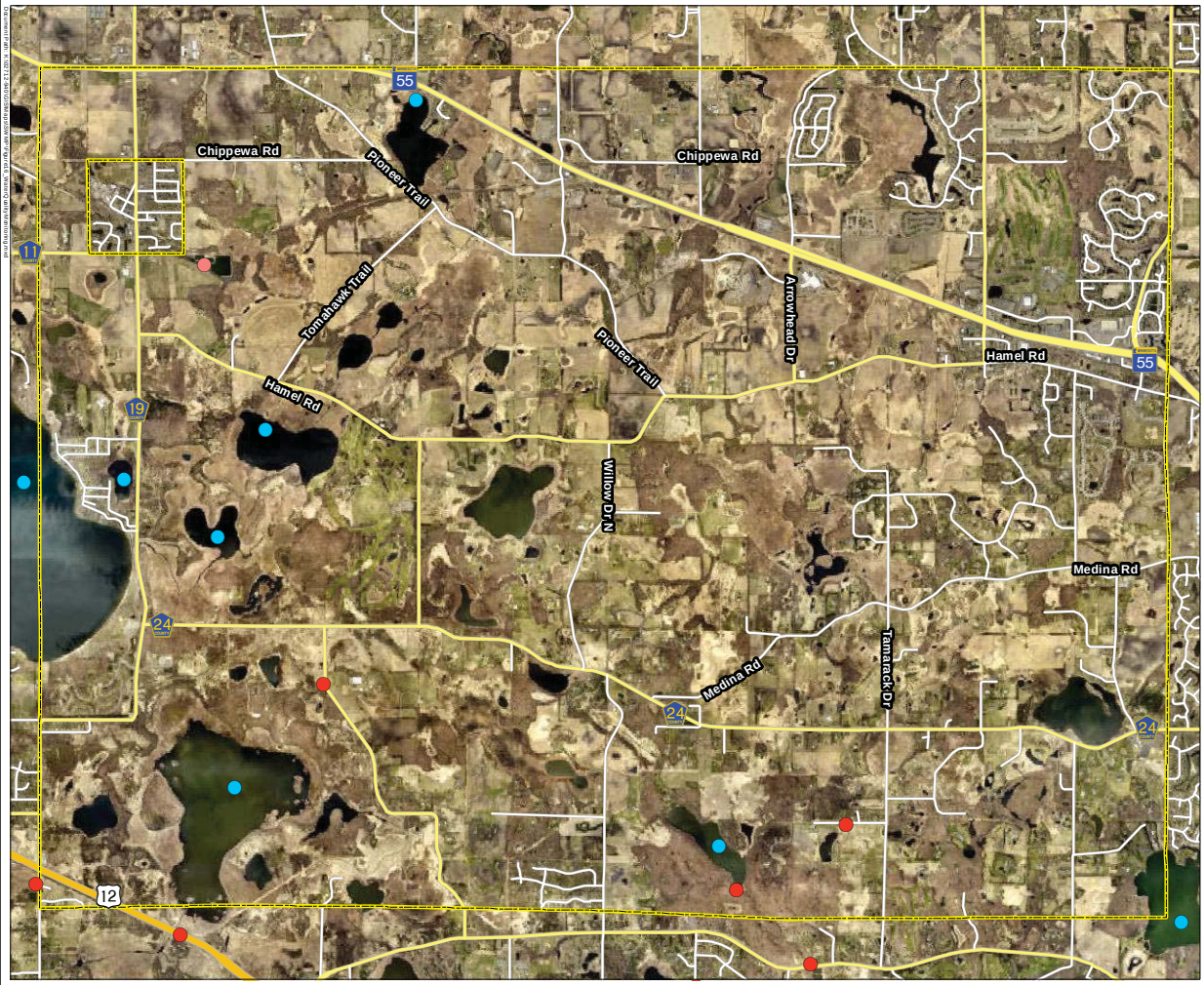

CITY OF MEDINA

Figure 14- Medina's Water Quality Monitoring Map

Medina's Surface Water Management Plan Medina, MN

Medina Boundary

Surface Water Monitoring Stations

Station Type, Organization

- Discharge, NPDES Permittee
- Lake, MPCA
- Stream, MPCA

N

0 2,650 Feet

WSB

CITY OF MEDINA

Figure 15- Medina's Pollutant Sources

Medina's Surface Water Management Plan
Medina, MN

- Medina Boundary

MPCA

- Air
- Investigation and Cleanup
- Water
- Feedlot
- Hazardous Waste
- Solid Waste
- Tanks and Leaks
- Multiple Activities

N

0 2,650 Feet

WSB

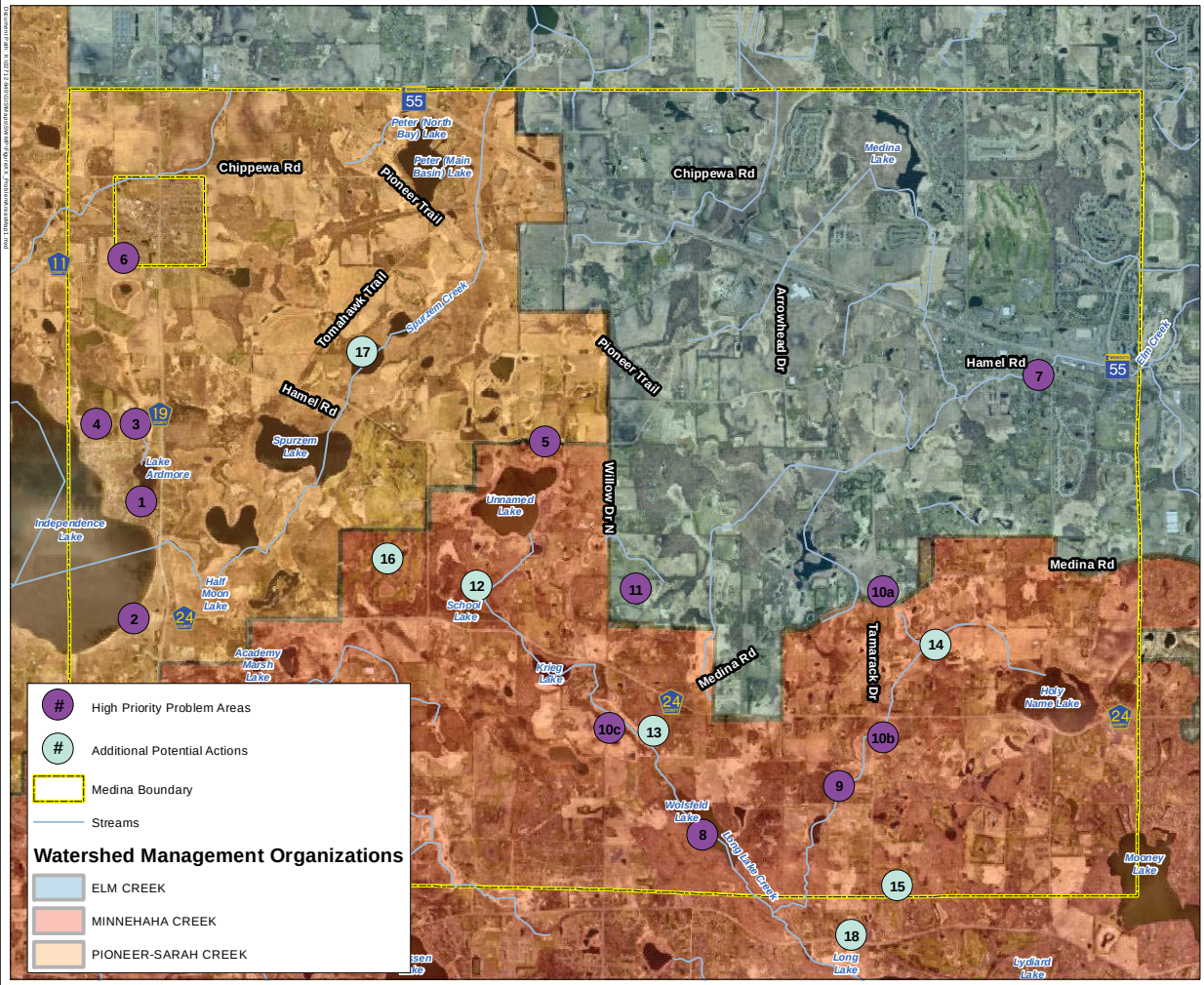

CITY OF MEDINA

Figure 16- Medina's Problem Areas Map

Medina's Surface Water Management Plan Medina, MN

High Priority

1) Lake Ardmore wetland restoration north of Maple Street
2) Lake Independence shoreline restoration as identified in the Ardmore Subwatershed Plan
3) Fern Street gully restoration
4) Gully restoration in TRPD
5) Hydrologic/hydraulic studies to establish Base Flood Elevations (BFE) for FEMA mapped waterbodies in PSCWMC and ECWMC. (MCWD has BFEs established)
6) Take the Loretto sewer ponds offline and connect to the MCES system
7) Partner with ECWMC on creek restoration near Hamel Road in Rainwater Park
8) Cooperate with DNR, MCWD to assess local erosion in Wolsfeld Woods that may contribute to lake sediment loads
9) Partner with MCWD to inspect and restore areas of erosion in Long Lake Creek
10) Evaluate options to address flooding:
    a.on the NE quadrant of Medina Road and Tamarack Drive
    b.Tamarack Road south of CSAH24
    c.Willow Drive south of CSAH 24
11) Expand education program for benefits of water reuse for irrigation (City-wide)

Additional Potential Actions

12) Partner with MCWD on School Lake internal load management
13) Partner with MCWD to inspect and restore open channel to Wolsfeld Lake.
14) Evaluate wetland restoration along Long Lake Creek
15) Education and cooperation with Spring Hill Golf Course
16) Education and cooperation with Baker Golf Course
17) Tomahawk Trail wetland restoration
18) Long Lake internal load management through carp removal

N

0 2,650 Feet

WSB

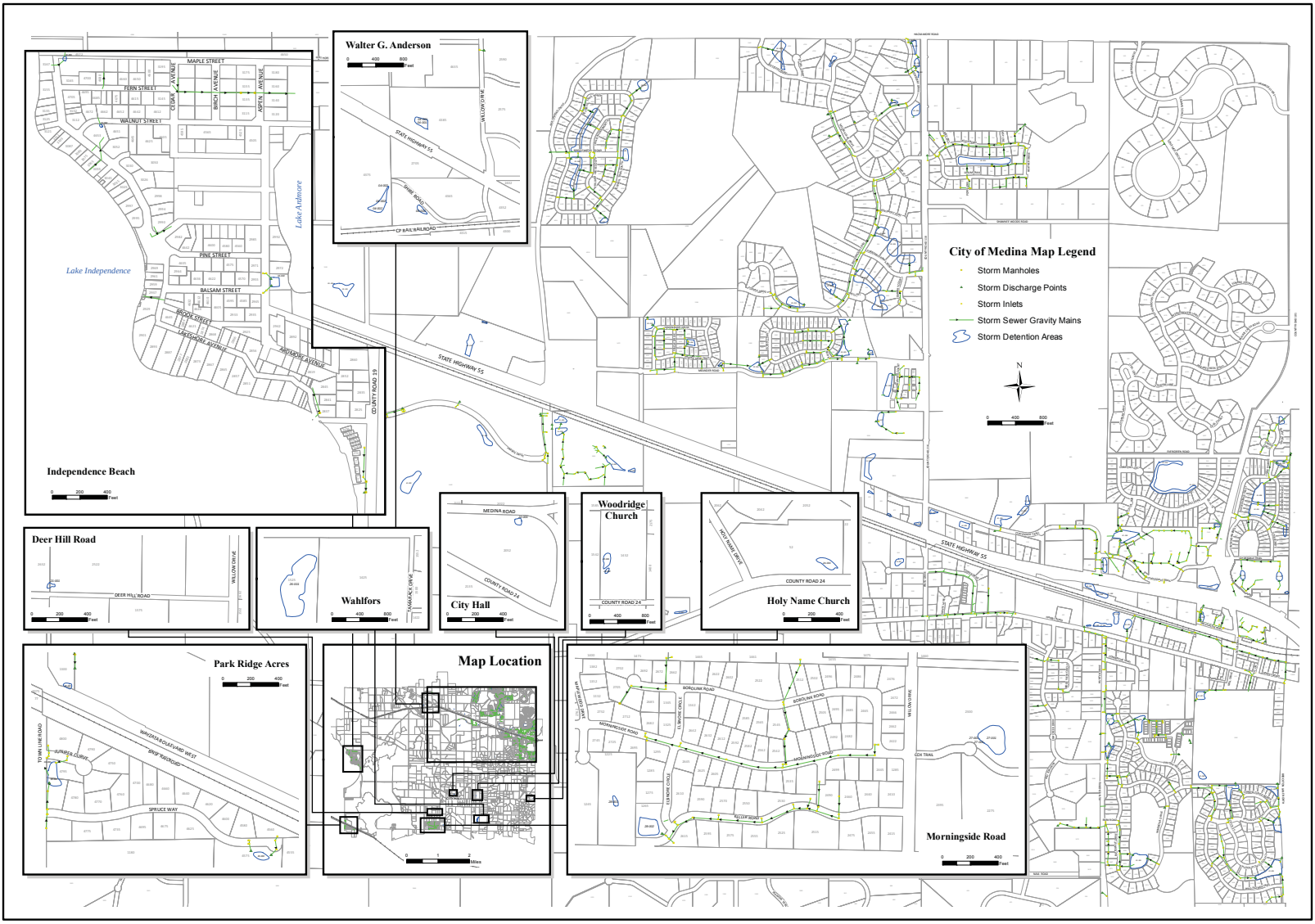

Figure 17- Medina's Stormwater System

Medina's Surface Water Management Plan
Medina, MN

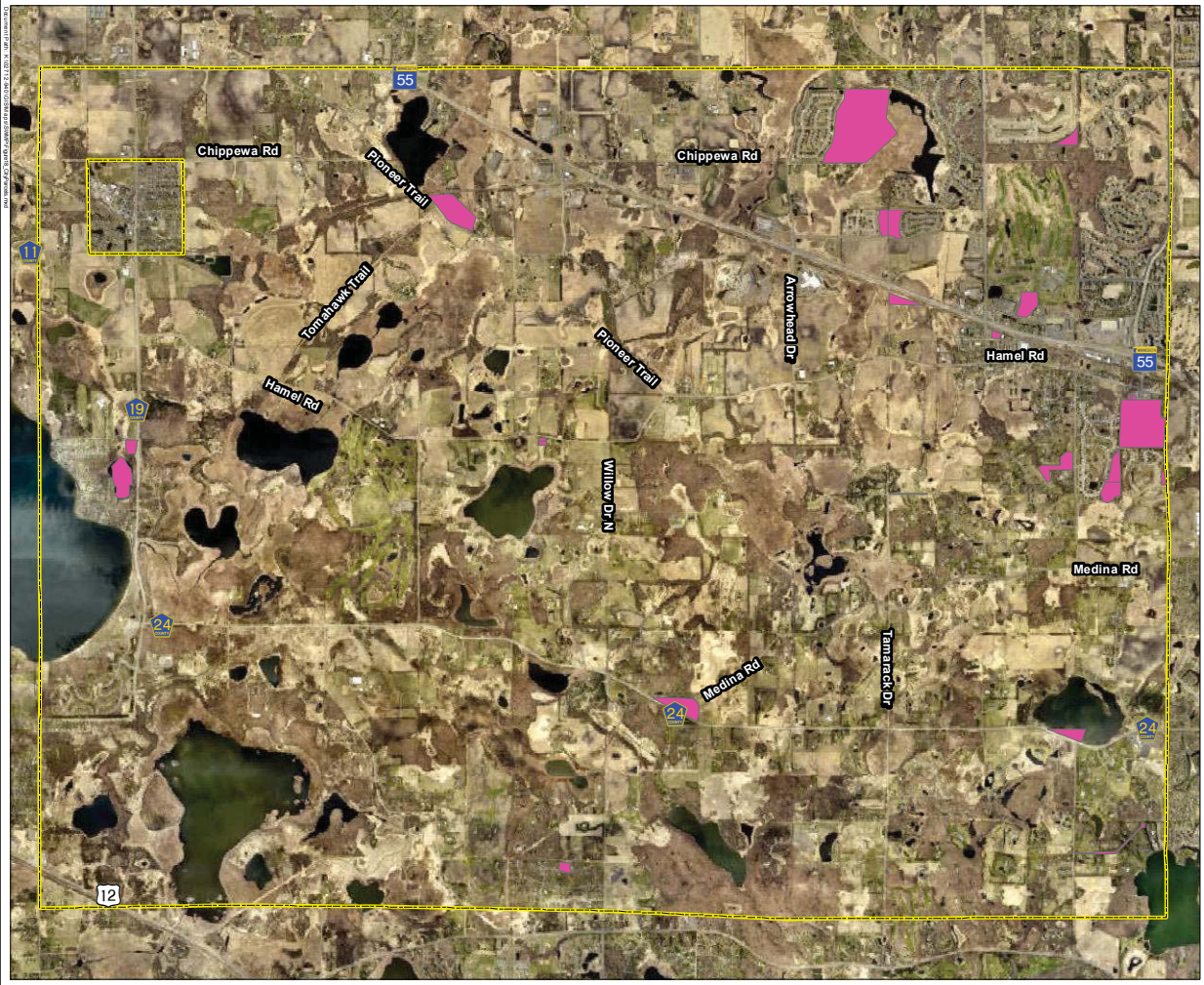

CITY OF MEDINA

Figure 18- Medina's City-Owned Parcels

Medina's Surface Water Management Plan Medina, MN

City-Owned Parcels

Medina Boundary

N

0 2,650 Feet

WSB

APPENDIX B

MS4 SWPPP Application for Reauthorization and BMP Sheets

Minnesota Pollution Control Agency
520 Lafayette Road North
St. Paul, MN 55155-4194

MS4 SWPPP Application for Reauthorization

for the NPDES/SDS General Small Municipal Separate Storm Sewer System (MS4) Permit MNR040000 reissued with an effective date of August 1, 2013

Stormwater Pollution Prevention Program (SWPPP) Document

Doc Type: Permit Application

Instructions: This application is for authorization to discharge stormwater associated with Municipal Separate Storm Sewer Systems (MS4s) under the National Pollutant Discharge Elimination System/State Disposal System (NPDES/SDS) Permit Program. **No fee** is required with the submittal of this application. Please refer to "Example" for detailed instructions found on the Minnesota Pollution Control Agency (MPCA) MS4 website at http://www.pca.state.mn.us/ms4.

Submittal: This *MS4 SWPPP Application for Reauthorization* form must be submitted electronically via e-mail to the MPCA at ms4permitprogram.pca@state.mn.us from the person that is duly authorized to certify this form. All questions with an asterisk (*) are required fields. All applications will be returned if required fields are not completed.

Questions: Contact Claudia Hochstein at 651-757-2881 or claudia.hochstein@state.mn.us, Dan Miller at 651-757-2246 or daniel.miller@state.mn.us, or call toll-free at 800-657-3864.

General Contact Information (*Required fields)

MS4 Owner (with ownership or operational responsibility, or control of the MS4)

*MS4 permittee name: Medina *County: Hennepin
(city, county, municipality, government agency or other entity)

*Mailing address: 2052 County Road 24

*City: Medina *State: MN *Zip code: 55340

*Phone (including area code): 763-473-4643 *E-mail: city@ci.medina.mn.us

MS4 General contact (with Stormwater Pollution Prevention Program [SWPPP] implementation responsibility)

*Last name: Scherer *First name: Steve
(department head, MS4 coordinator, consultant, etc.)

*Title: Public Works Director

*Mailing address: 600 Clydesdale Trail

*City: Medina *State: MN *Zip code: 55340

*Phone (including area code): 763-473-8842 *E-mail: steve.scherer@ci.medina.mn.us

Preparer information (complete if SWPPP application is prepared by a party other than MS4 General contact)

Last name: Nelson First name: Shane
(department head, MS4 coordinator, consultant, etc.)

Title: Water Resources Engineer

Mailing address: 3601 Thurston Ave.

City: Anoka State: MN Zip code: 55303

Phone (including area code): 763-427-5860 E-mail: ShaneN@haa-inc.com

Verification

1. I seek to continue discharging stormwater associated with a small MS4 after the effective date of this Permit, and shall submit this *MS4 SWPPP Application for Reauthorization* form, in accordance with the schedule in Appendix A, Table 1, with the SWPPP document completed in accordance with the Permit (Part II.D.). ☒ Yes
2. I have read and understand the NPDES/SDS MS4 General Permit and certify that we intend to comply with all requirements of the Permit. ☒ Yes

Certification (All fields are required)

☒ Yes - *I certify under penalty of law that this document and all attachments were prepared under my direction or supervision in accordance with a system designed to assure that qualified personnel properly gathered and evaluated the information submitted.*

I certify that based on my inquiry of the person, or persons, who manage the system, or those persons directly responsible for gathering the information, the information submitted is, to the best of my knowledge and belief, true, accurate, and complete.

I am aware that there are significant penalties for submitting false information, including the possibility of civil and criminal penalties.

This certification is required by Minn. Stat. §§ 7001.0070 and 7001.0540. The authorized person with overall, MS4 legal responsibility must certify the application (principal executive officer or a ranking elected official).

By typing my name in the following box, I certify the above statements to be true and correct, to the best of my knowledge, and that this information can be used for the purpose of processing my application.

Name: Steve Scherer
(This document has been electronically signed)

Title: Public Works Director Date (mm/dd/yyyy): 11/05/2013

Mailing address: 600 Clydesdale Trail

City: Medina State: MN Zip code: 55340

Phone (including area code): 763-473-8842 E-mail: steve.scherer@ci.medina.mn.us

Note: *The application will not be processed without certification.*

Stormwater Pollution Prevention Program Document

I. Partnerships: (Part II.D.1)

A. List the **regulated small MS4(s)** with which you have established a partnership in order to satisfy one or more requirements of this Permit. Indicate which Minimum Control Measure (MCM) requirements or other program components that each partnership helps to accomplish (List all that apply). Check the box below if you currently have no established partnerships with other regulated MS4s. If you have more than five partnerships, hit the tab key after the last line to generate a new row.

☐ No partnerships with regulated small MS4s

Name and description of partnership	MCM/Other permit requirements involved
Cooperative Implementation Project with City of Loretto. Applied for and procured Clean Water Grant funds for restoration of wetlands and creation of stormwater ponds in Loretto city park.	Discharges to Impaired Waters with a US EPA-Approved TMDL
Minnehaha Creek Watershed District Provides educational material and training on watershed-friendly practices to citizens of the City of Medina.	MCM 1, 2

B. If you have additional information that you would like to communicate about your partnerships with other regulated small MS4(s), provide it in the space below, or include an attachment to the SWPPP Document, with the following file naming convention: *MS4NameHere_Partnerships.*

II. Description of Regulatory Mechanisms: (Part II.D.2)

Illicit discharges

A. Do you have a regulatory mechanism(s) that effectively prohibits non-stormwater discharges into your small MS4, except those non-stormwater discharges authorized under the Permit (Part III.D.3.b.)? ☒ Yes ☐ No

1. If **yes:**

   a. Check which *type* of regulatory mechanism(s) your organization has (check all that apply):

      ☒ Ordinance ☐ Contract language
      ☐ Policy/Standards ☐ Permits
      ☐ Rules
      ☐ Other, explain: _____

   b. Provide either a direct link to the mechanism selected above or attach it as an electronic document to this form; or if your regulatory mechanism is either an Ordinance or a Rule, you may provide a citation:

      Citation:

      Medina City Code, Chapter 7, Section 747

      Direct link:

      http://medinamn.us/wp-content/uploads/2010/08/747.pdf

      ☐ Check here if attaching an electronic copy of your regulatory mechanism, with the following file naming convention: *MS4NameHere_IDDEreg.*

2. If **no:**
   Describe the tasks and corresponding schedules that will be taken to assure that, within 12 months of the date permit coverage is extended, this permit requirement is met:

Construction site stormwater runoff control

A. Do you have a regulatory mechanism(s) that establishes requirements for erosion and sediment controls and waste controls? ☒ Yes ☐ No

1. If **yes:**

   a. Check which *type* of regulatory mechanism(s) your organization has (check all that apply):
      ☒ Ordinance ☐ Contract language
      ☐ Policy/Standards ☐ Permits
      ☐ Rules
      ☐ Other, explain: _____

   b. Provide either a direct link to the mechanism selected above or attach it as an electronic document to this form; or if your regulatory mechanism is either an Ordinance or a Rule, you may provide a citation:

      Citation:

      Medina City Code, Chapter 8, Section 828.29

      Direct link:

      http://medinamn.us/wp-content/uploads/2010/08/828-Performance-Standards1.pdf

      ☐ Check here if attaching an electronic copy of your regulatory mechanism, with the following file naming convention: *MS4NameHere_CSWreg.*

B. Is your regulatory mechanism at least as stringent as the MPCA general permit to Discharge Stormwater Associated with Construction Activity (as of the effective date of the MS4 Permit)? ☐Yes ☒ No

If you answered **yes** to the above question, proceed to C.

If you answered **no** to either of the above permit requirements listed in A. or B., describe the tasks and corresponding schedules that will be taken to assure that, within 12 months of the date permit coverage is extended, these permit requirements are met:

We will revise our ordinance to ensure that it is at least as stringent as the MPCA general permit to Discharge Stormwater Associated with Construction Activity. As a goal, a draft of the ordinance amendment will be prepared within 6 months of permit coverage and a public hearing will be held within 9 months of permit coverage. If comments are received, we will evaluate their merit and revise if necessary. The amended ordinance will be sent to the city council for approval within 12 months of permit coverage.

C. Answer **yes** or **no** to indicate whether your regulatory mechanism(s) requires owners and operators of construction activity to develop site plans that incorporate the following erosion and sediment controls and waste controls as described in the Permit (Part III.D.4.a.(1)-(8)), and as listed below:

1.	Best Management Practices (BMPs) to minimize erosion.	☒ Yes	☐ No
2.	BMPs to minimize the discharge of sediment and other pollutants.	☒ Yes	☐ No
3.	BMPs for dewatering activities.	☒ Yes	☐ No
4.	Site inspections and records of rainfall events	☒ Yes	☐ No
5.	BMP maintenance	☒ Yes	☐ No
6.	Management of solid and hazardous wastes on each project site.	☒ Yes	☐ No
7.	Final stabilization upon the completion of construction activity, including the use of perennial vegetative cover on all exposed soils or other equivalent means.	☒ Yes	☐ No
8.	Criteria for the use of temporary sediment basins.	☒ Yes	☐ No

If you answered **no** to any of the above permit requirements, describe the tasks and corresponding schedules that will be taken to assure that, within 12 months of the date permit coverage is extended, these permit requirements are met:

Post-construction stormwater management

A. Do you have a regulatory mechanism(s) to address post-construction stormwater management activities?
☒ Yes ☐ No

1. If **yes:**

   a. Check which *type* of regulatory mechanism(s) your organization has (check all that apply):

      ☒ Ordinance ☐ Contract language
      ☐ Policy/Standards ☐ Permits
      ☐ Rules
      ☐ Other, explain: _____

   b. Provide either a direct link to the mechanism selected above or attach it as an electronic document to this form; or if your regulatory mechanism is either an Ordinance or a Rule, you may provide a citation:

      Citation:

      Medina City Code, Chapter 8, Section 828.33

      Direct link:

      http://medinamn.us/wp-content/uploads/2010/08/828-Performance-Standards1.pdf

      ☐ Check here if attaching an electronic copy of your regulatory mechanism, with the following file naming convention: *MS4NameHere_PostCSWreg.*

B. Answer **yes** or **no** below to indicate whether you have a regulatory mechanism(s) in place that meets the following requirements as described in the Permit (Part III.D.5.a.):

1. **Site plan review:** Requirements that owners and/or operators of construction activity submit site plans with post-construction stormwater management BMPs to the permittee for review and approval, prior to start of construction activity. ☒ Yes ☐ No

2. **Conditions for post construction stormwater management:** Requires the use of any combination of BMPs, with highest preference given to Green Infrastructure techniques and practices (e.g., infiltration, evapotranspiration, reuse/harvesting, conservation design, urban forestry, green roofs, etc.), necessary to meet the following conditions on the site of a construction activity to the Maximum Extent Practicable (MEP):

   a. For new development projects – no net increase from pre-project conditions (on an annual average basis) of: ☒ Yes ☐ No

      1) Stormwater discharge volume, unless precluded by the stormwater management limitations in the Permit (Part III.D.5.a(3)(a)).
      2) Stormwater discharges of Total Suspended Solids (TSS).
      3) Stormwater discharges of Total Phosphorus (TP).

   b. For redevelopment projects – a net reduction from pre-project conditions (on an annual average basis) of: ☐ Yes ☒ No

      1) Stormwater discharge volume, unless precluded by the stormwater management limitations in the Permit (Part III.D.5.a(3)(a)).
      2) Stormwater discharges of TSS.
      3) Stormwater discharges of TP.

3. **Stormwater management limitations and exceptions:**

   a. Limitations

      1) Prohibit the use of infiltration techniques to achieve the conditions for post-construction stormwater management in the Permit (Part III.D.5.a(2)) when the infiltration structural stormwater BMP will receive discharges from, or be constructed in areas: ☐ Yes ☒ No

         a) Where industrial facilities are not authorized to infiltrate industrial stormwater under an NPDES/SDS Industrial Stormwater Permit issued by the MPCA.
         b) Where vehicle fueling and maintenance occur.
         c) With less than three (3) feet of separation distance from the bottom of the infiltration system to the elevation of the seasonally saturated soils or the top of bedrock.
         d) Where high levels of contaminants in soil or groundwater will be mobilized by the infiltrating stormwater.

      2) Restrict the use of infiltration techniques to achieve the conditions for post-construction stormwater management in the Permit (Part III.D.5.a(2)), without higher engineering review, sufficient to provide a functioning treatment system and prevent adverse impacts to groundwater, when the infiltration device will be constructed in areas: ☐ Yes ☒ No

         a) With predominately Hydrologic Soil Group D (clay) soils.
         b) Within 1,000 feet up-gradient, or 100 feet down-gradient of active karst features.
         c) Within a Drinking Water Supply Management Area (DWSMA) as defined in Minn. R. 4720.5100, subp. 13.

d) Where soil infiltration rates are more than 8.3 inches per hour.

3) For linear projects where the lack of right-of-way precludes the installation of volume control practices that meet the conditions for post-construction stormwater management in the Permit (Part III.D.5.a(2)), the permittee's regulatory mechanism(s) may allow exceptions as described in the Permit (Part III.D.5.a(3)(b)). The permittee's regulatory mechanism(s) shall ensure that a reasonable attempt be made to obtain right-of-way during the project planning process. ☐ Yes ☒ No

4. **Mitigation provisions:** The permittee's regulatory mechanism(s) shall ensure that any stormwater discharges of TSS and/or TP not addressed on the site of the original construction activity are addressed through mitigation and, at a minimum, shall ensure the following requirements are met:

   a. Mitigation project areas are selected in the following order of preference: ☐ Yes ☒ No
      1) Locations that yield benefits to the same receiving water that receives runoff from the original construction activity.
      2) Locations within the same Minnesota Department of Natural Resource (DNR) catchment area as the original construction activity.
      3) Locations in the next adjacent DNR catchment area up-stream
      4) Locations anywhere within the permittee's jurisdiction.

   b. Mitigation projects must involve the creation of new structural stormwater BMPs or the retrofit of existing structural stormwater BMPs, or the use of a properly designed regional structural stormwater BMP. ☐ Yes ☒ No

   c. Routine maintenance of structural stormwater BMPs already required by this permit cannot be used to meet mitigation requirements of this part. ☐ Yes ☒ No

   d. Mitigation projects shall be completed within 24 months after the start of the original construction activity. ☐ Yes ☒ No

   e. The permittee shall determine, and document, who will be responsible for long-term maintenance on all mitigation projects of this part. ☐ Yes ☒ No

   f. If the permittee receives payment from the owner and/or operator of a construction activity for mitigation purposes in lieu of the owner or operator of that construction activity meeting the conditions for post-construction stormwater management in Part III.D.5.a(2), the permittee shall apply any such payment received to a public stormwater project, and all projects must be in compliance with Part III.D.5.a(4)(a)-(e). ☐ Yes ☒ No

5. **Long-term maintenance of structural stormwater BMPs:** The permittee's regulatory mechanism(s) shall provide for the establishment of legal mechanisms between the permittee and owners or operators responsible for the long-term maintenance of structural stormwater BMPs not owned or operated by the permittee, that have been implemented to meet the conditions for post-construction stormwater management in the Permit (Part III.D.5.a(2)). This only includes structural stormwater BMPs constructed after the effective date of this permit and that are directly connected to the permittee's MS4, and that are in the permittee's jurisdiction. The legal mechanism shall include provisions that, at a minimum:

   a. Allow the permittee to conduct inspections of structural stormwater BMPs not owned or operated by the permittee, perform necessary maintenance, and assess costs for those structural stormwater BMPs when the permittee determines that the owner and/or operator of that structural stormwater BMP has not conducted maintenance. ☒ Yes ☐ No

   b. Include conditions that are designed to preserve the permittee's right to ensure maintenance responsibility, for structural stormwater BMPs not owned or operated by the permittee, when those responsibilities are legally transferred to another party. ☒ Yes ☐ No

   c. Include conditions that are designed to protect/preserve structural stormwater BMPs and site features that are implemented to comply with the Permit (Part III.D.5.a(2)). If site configurations or structural stormwater BMPs change, causing decreased structural stormwater BMP effectiveness, new or improved structural stormwater BMPs must be implemented to ensure the conditions for post-construction stormwater management in the Permit (Part III.D.5.a(2)) continue to be met. ☐ Yes ☒ No

If you answered **no** to any of the above permit requirements, describe the tasks and corresponding schedules that will be taken to assure that, within twelve (12) months of the date permit coverage is extended, these permit requirements are met:

Amend the current post-construction stormwater ordinance to include permit requirements for re-development and linear projects. Also, the limitations and mitigation provisions must be amended to meet permit requirements. The City curretly requires a Stormwater Maintenance Agreement for privately owned BMP's, but the requirements must be amended to include implementation of "new or improved structural BMP's" should the site configuration or structural stormwater BMP's change. As a goal, a draft of the ordinance amendment will be prepared within 6 months of permit coverage and a public hearing will be held within 9 months of permit coverage. If comments are received, we will

evaluate their merit and revise if necessary. The amended ordinance will be sent to the city council for approval within 12 months of permit coverage.

III. Enforcement Response Procedures (ERPs): (Part II.D.3)

A. Do you have existing ERPs that satisfy the requirements of the Permit (Part III.B.)? ☐ Yes ☒ No

1. If **yes**, attach them to this form as an electronic document, with the following file naming convention: *MS4NameHere_ERPs.*
2. If **no**, describe the tasks and corresponding schedules that will be taken to assure that, with twelve (12) months of the date permit coverage is extended, these permit requirements are met:

   Within 6 months of permit coverage, we will transfer our current procedure into writing. Within 12 months of permit coverage, we will develop ERP's as required by the permit for IDDE, Construction Site Stormwater Runoff Control, and Post Construction Stormwater Management.

B. Describe your ERPs:

IV. Storm Sewer System Map and Inventory: (Part II.D.4.)

A. Describe how you manage your storm sewer system map and inventory:

Our storm sewer and structural BMP's are surveyed using a GPS unit. We will then utilize ArcView to create an electronic database/map. This allows for real-time updates to the stormsewer system map as new infrastructure is created.

B. Answer **yes** or **no** to indicate whether your storm sewer system map addresses the following requirements from the Permit (Part III.C.1.a-d), as listed below:

1. The permittee's entire small MS4 as a goal, but at a minimum, all pipes 12 inches or greater in diameter, including stormwater flow direction in those pipes. ☐ Yes ☒ No
2. Outfalls, including a unique identification (ID) number assigned by the permittee, and an associated geographic coordinate. ☐ Yes ☒ No
3. Structural stormwater BMPs that are part of the permittee's small MS4. ☐ Yes ☒ No
4. All receiving waters. ☐ Yes ☒ No

If you answered **no** to any of the above permit requirements, describe the tasks and corresponding schedules that will be taken to assure that, within 12 months of the date permit coverage is extended, these permit requirements are met:

We currently have all storm sewers 24" and larger mapped as required by the previous MS4 permit and are in the process of updating our map in accordance with the 2013-2018 permit. All locations have been surveyed with a GPS unit by City Staff and the information has been transmitted to a consultant for incorporating into our storm sewer system map. The geopgraphic coordinates have already been obtained and the map will be complete within 12 months of permit coverage.

C. Answer **yes** or **no** to indicate whether you have completed the requirements of 2009 Minnesota Session Law, Ch. 172. Sec. 28: with the following inventories, according to the specifications of the Permit (Part III.C.2.a.-b.), including:

1. All ponds within the permittee's jurisdiction that are constructed and operated for purposes of water quality treatment, stormwater detention, and flood control, and that are used for the collection of stormwater via constructed conveyances. ☐ Yes ☒ No
2. All wetlands and lakes, within the permittee's jurisdiction, that collect stormwater via constructed conveyances. ☐ Yes ☒ No

D. Answer **yes** or **no** to indicate whether you have completed the following information for each feature inventoried.

1. A unique identification (ID) number assigned by the permittee. ☐ Yes ☒ No
2. A geographic coordinate. ☒ Yes ☐ No
3. Type of feature (e.g., pond, wetland, or lake). This may be determined by using best professional judgment. ☐ Yes ☒ No

If you have answered **yes** to all above requirements, and you have already submitted the Pond Inventory Form to the MPCA, then you do not need to resubmit the inventory form below.

If you answered **no** to any of the above permit requirements, describe the tasks and corresponding schedules that will be taken to assure that, within 12 months of the date permit coverage is extended, these permit requirements are met:

We will complete the inventory as required by the permit and 2009 Minnesota Session Law within 12 months of permit coverage.

E. Answer **yes** or **no** to indicate if you are attaching your pond, wetland and lake inventory to the MPCA on the form provided on the MPCA website at: http://www.pca.state.mn.us/ms4 , according to the specifications of Permit (Part III.C.2.b.(1)-(3)). Attach with the following file naming convention: *MS4NameHere_inventory*. ☐ Yes ☒ No

If you answered **no,** the inventory form must be submitted to the MPCA MS4 Permit Program within 12 months of the date permit coverage is extended.

V. Minimum Control Measures (MCMs) (Part II.D.5)

A. MCM1: Public education and outreach

1. The Permit requires that, within 12 months of the date permit coverage is extended, existing permittees revise their education and outreach program that focuses on illicit discharge recognition and reporting, as well as other specifically selected stormwater-related issue(s) of high priority to the permittee during this permit term. Describe your **current** educational program, including **any high-priority topics included**:

   The City of Medina is primarily residential, and thus our focus is on residential issues. In general, it tends to be on stormwater pollution related topics and our website includes a page dedicated to stormwater issues. We also partner with the three watersheds within our municipality which distribute educational materials. We also highlight household hazardous waste disposal, organics recycling, and groundwater sustainability in our newsletter as well as our website.

2. List the categories of BMPs that address your public education and outreach program, including the distribution of educational materials and a program implementation plan. Use the first table for categories of BMPs that you have established and the second table for categories of BMPs that you plan to implement over the course of the permit term.

   Include the measurable goals with appropriate timeframes that each BMP category will be implemented and completed. In addition, provide interim milestones and the frequency of action in which the permittee will implement and/or maintain the BMPs. Refer to the U.S. Environmental Protection Agency's (EPA) *Measurable Goals Guidance for Phase II Small MS4s* (http://www.epa.gov/npdes/pubs/measurablegoals.pdf).

   If you have more than five categories, hit the tab key after the last line to generate a new row.

Established BMP categories	Measurable goals and timeframes
Brochures	Given out at events (i.e. Medina Celebration Day) and available at City Hall/new residents. As a goal, distribute 1,000-1,500 annually.
Website	Reaches about 10,000 people. Review on an annual basis to ensure that topics are still relevant.
Clean Water Resource Fair	Annual event. Advertised in newsletter and website.
E-Newsletter	6 different newsletters with 1-3 articles distributed each year. Reaches about 10,000 people.
Posters	2 posters shown at City events annually. Reaches about 1,000-1,500 people.

BMP categories to be implemented	Measurable goals and timeframes
Revise Content	Determine high priority topics within 12 months of permit coverage and revise, update, or create new brochures and educational material as appropriate.

3. Provide the name or the position title of the individual(s) who is responsible for implementing and/or coordinating this MCM:

Public Works Director Steve Scherer

600 Clydesdale Trail, Medina, MN 55340 (763-473-8842))

B. MCM2: Public participation and involvement

1. The Permit (Part III.D.2.a.) requires that, within 12 months of the date permit coverage is extended, existing permittees shall revise their current program, as necessary, and continue to implement a public participation/involvement program to solicit public input on the SWPPP. Describe your current program:

Hold a public meeting on the SWPPP at least once annually to solicit comment.

2. List the categories of BMPs that address your public participation/involvement program, including solicitation and documentation of public input on the SWPPP. Use the first table for categories of BMPs that you have established and the second table for categories of BMPs that you plan to implement over the course of the permit term.

Include the measurable goals with appropriate timeframes that each BMP category will be implemented and completed. In addition, provide interim milestones and the frequency of action in which the permittee will implement and/or maintain the BMPs. Refer to the EPA's *Measurable Goals Guidance for Phase II Small MS4s* (http://www.epa.gov/npdes/pubs/measurablegoals.pdf). **If you have more than five categories**, hit the tab key after the last line to generate a new row.

Established BMP categories	Measurable goals and timeframes
Annual Meeting	Hold meeting at least once annually
Public Notice	Notice in newsletter and two newspapers 30 days before meeting
Online availability of SWPPP document	Available to residents in an electronic format anytime
Consider Written and Oral Public Input	Number of public comments received and considered. Review any comments received within 1 month.
Spring Clean Up Day	Number of citizens that participate; amount of trash, appliances, hazardous and non hazardous waste received. Annual program.
Medina Celebration Day	Annually, make face to face contact and distribute education material to interested residents.

BMP categories to be implemented	Measurable goals and timeframes
Revise Public Notice Procedure	Develop new public notice procedure that is less costly prior to annual public meeting. Post public notice as determined appropriate annually prior to annual meeting.

3. Do you have a process for receiving and documenting citizen input? ☒ Yes ☐ No

If you answered **no** to the above permit requirement, describe the tasks and corresponding schedules that will be taken to assure that, within 12 months of the date permit coverage is extended, this permit requirement is met:

4. Provide the name or the position title of the individual(s) who is responsible for implementing and/or coordinating this MCM:

City Administrator Scott Johnson

2052 County Road 24, Medina, MN 55340 (763-473-4643)

C. MCM 3: Illicit discharge detection and elimination

1. The Permit (Part III.D.3.) requires that, within 12 months of the date permit coverage is extended, existing permittees revise their current program as necessary, and continue to implement and enforce a program to detect and eliminate illicit discharges into the small MS4. Describe your current program:

   The City has an ordinance that prohibits illicit discharges and connections. Most of our field staff is trained to look for any signs of an illicit discharge during their normal duties.

2. Does your Illicit Discharge Detection and Elimination Program meet the following requirements, as found in the Permit (Part III.D.3.c.-g.)?

   a. Incorporation of illicit discharge detection into all inspection and maintenance activities conducted under the Permit (Part III.D.6.e.-f.)Where feasible, illicit discharge inspections shall be conducted during dry-weather conditions (e.g., periods of 72 or more hours of no precipitation). ☒ Yes ☐ No

   b. Detecting and tracking the source of illicit discharges using visual inspections. The permittee may also include use of mobile cameras, collecting and analyzing water samples, and/or other detailed procedures that may be effective investigative tools. ☒ Yes ☐ No

   c. Training of all field staff, in accordance with the requirements of the Permit (Part III.D.6.g.(2)), in illicit discharge recognition (including conditions which could cause illicit discharges), and reporting illicit discharges for further investigation. ☐ Yes ☒ No

   d. Identification of priority areas likely to have illicit discharges, including at a minimum, evaluating land use associated with business/industrial activities, areas where illicit discharges have been identified in the past, and areas with storage of large quantities of significant materials that could result in an illicit discharge. ☐ Yes ☒ No

   e. Procedures for the timely response to known, suspected, and reported illicit discharges. ☐ Yes ☒ No

   f. Procedures for investigating, locating, and eliminating the source of illicit discharges. ☐ Yes ☒ No

   g. Procedures for responding to spills, including emergency response procedures to prevent spills from entering the small MS4. The procedures shall also include the immediate notification of the Minnesota Department of Public Safety Duty Officer, if the source of the illicit discharge is a spill or leak as defined in Minn. Stat. § 115.061. ☐ Yes ☒ No

   h. When the source of the illicit discharge is found, the permittee shall use the ERPs required by the Permit (Part III.B.) to eliminate the illicit discharge and require any needed corrective action(s). ☐ Yes ☒ No

   If you answered **no** to any of the above permit requirements, describe the tasks and corresponding schedules that will be taken to assure that, within 12 months of the date permit coverage is extended, these permit requirements are met:

   Modify our Illicit Discharge Detection and Elimination Program to include training of all field staff. A document that discusses the training of new employees and training intervals for existing employees will be prepared as discussed later within 12 months of permit coverage..

   Utilizing our storm sewer map and land use maps, we will identify priority areas for inspections. Priority areas will include industrial and commercial land uses with high potential for illicit discharges or areas with past illicit discharges. Priority areas will be developed prior to the inspections completed in 2014.

   Develop ERP's for investigating and enforcement of illicit discharges. The illicit discharge ordinance includes steps that may be taken for enforcement, but the ERP will serve as a "road map" for employees to follow in the event that an illicit discarge is suspected or detected. The ERP's will be completed within 12 months of permit coverage.

3. List the categories of BMPs that address your illicit discharge, detection and elimination program. Use the first table for categories of BMPs that you have established and the second table for categories of BMPs that you plan to implement over the course of the permit term.

   Include the measurable goals with appropriate timeframes that each BMP category will be implemented and completed. In addition, provide interim milestones and the frequency of action in which the permittee will implement and/or maintain the BMPs. Refer to the EPA's *Measurable Goals Guidance for Phase II Small MS4s* (http://www.epa.gov/npdes/pubs/measurablegoals.pdf).

   If you have more than five categories, hit the tab key after the last line to generate a new row.

Established BMP categories	Measurable goals and timeframes
Ordinance	Review and revise ordinance yearly to ensure that it continues to meet the needs of the city and legal requirements.
Inspections	City employees are on the lookout for illicit discharges while they perform their normal duties and will inspect complaints. Any components of the storm sewer system with an unusual color, odor, or other indicator of an illicit discharge would be further investigated. Inspections are performed at least once annually.
Training	Key staff have been trained at least once on IDDE.
Storm Sewer System Map	The existing storm sewer system map can be used to

	determine the location of storm sewer and conveyances and receiving waters and can be used in "tracking" illicit discharges.

BMP categories to be implemented	Measurable goals and timeframes
Training	Incorporate training of all field staff into staff meetings before August 1, 2014 and develop a recurring training interval within 12 months of permit coverage.
Inspections	Incorporate IDDE into all annual pond and structural BMP inspections. Document any suspected illicit discharges and further investigate. If an illicit discharge is found, follow ERP's to eliminate the illicit discharge.
Develop and implement ERP's	Completion of written procedures within 12 months of permit coverage.
Storm Sewer Map Update	Update our storm sewer system map in accordance with the new permit requirements within 12 months of permit coverage.

4. Do you have procedures for record-keeping within your Illicit Discharge Detection and Elimination (IDDE) program as specified within the Permit (Part III.D.3.h.)? ☐ Yes ☒ No

   If you answered **no**, indicate how you will develop procedures for record-keeping of your Illicit Discharge, Detection and Elimination Program, within 12 months of the date permit coverage is extended:

   We will evaluate the various methods for record-keeping (excel spreadsheet, GIS tracking, paper form(s) and determine the method that best suits us within 6 months of permit coverage as a goal, such that we can have an established procedure within 12 months of permit coverage.

5. Provide the name or the position title of the individual(s) who is responsible for implementing and/or coordinating this MCM:

   Public Works Director Steve Scherer

   600 Clydesdale Trail, Medina, MN 55340 (763-473-8842)

D. MCM 4: Construction site stormwater runoff control

1. The Permit (Part III.D.4) requires that, within 12 months of the date permit coverage is extended, existing permittees shall revise their current program, as necessary, and continue to implement and enforce a construction site stormwater runoff control program. Describe your current program:

   We utilize a permit application for any construction sites that disturb 1 acre or more. We require review of construction site erosion and sediment control plans before projects begin. Also, a surety is required to ensure that the required BMP's are implemented.

2. Does your program address the following BMPs for construction stormwater erosion and sediment control as required in the Permit (Part III.D.4.b.):
   a. Have you established written procedures for site plan reviews that you conduct prior to the start of construction activity? ☒ Yes ☐ No
   b. Does the site plan review procedure include notification to owners and operators proposing construction activity that they need to apply for and obtain coverage under the MPCA's general permit to *Discharge Stormwater Associated with Construction Activity No. MN R100001*? ☐ Yes ☒ No
   c. Does your program include written procedures for receipt and consideration of reports of noncompliance or other stormwater related information on construction activity submitted by the public to the permittee? ☐ Yes ☒ No
   d. Have you included written procedures for the following aspects of site inspections to determine compliance with your regulatory mechanism(s):
      1) Does your program include procedures for identifying priority sites for inspection? ☐ Yes ☒ No
      2) Does your program identify a frequency at which you will conduct construction site inspections? ☐ Yes ☒ No
      3) Does your program identify the names of individual(s) or position titles of those responsible for conducting construction site inspections? ☐ Yes ☒ No
      4) Does your program include a checklist or other written means to document construction site inspections when determining compliance? ☐ Yes ☒ No
   e. Does your program document and retain construction project name, location, total acreage to be disturbed, and owner/operator information? ☒ Yes ☐ No
   f. Does your program document stormwater-related comments and/or supporting information used to ☒ Yes ☐ No

determine project approval or denial?

g. Does your program retain construction site inspection checklists or other written materials used to document site inspections? ☐ Yes ☒ No

If you answered **no** to any of the above permit requirements, describe the tasks and corresponding schedules that will be taken to assure that, within 12 months of the date permit coverage is extended, these permit requirements are met.

We will update our program and amend our written procedures to comply with the new permit requirements within 12 months of permit coverage.

3. List the categories of BMPs that address your construction site stormwater runoff control program. Use the first table for categories of BMPs that you have established and the second table for categories of BMPs that you plan to implement over the course of the permit term.

   Include the measurable goals with appropriate timeframes that each BMP category will be implemented and completed. In addition, provide interim milestones and the frequency of action in which the permittee will implement and/or maintain the BMPs. Refer to the EPA's *Measurable Goals Guidance for Phase II Small MS4s* (http://www.epa.gov/npdes/pubs/measurablegoals.pdf). **If you have more than five categories**, hit the tab key after the last line to generate a new row.

Established BMP categories	Measurable goals and timeframes
Permit Application System	Process all applications in accordance with City of Medina Developer's Handbook within 60 days. Numbers of permits processed.
Inspections	Conduct inspections on average of once per week and after precipitation events. Number of sites inspected.
Ordinance	The City has an erosion and sediment control ordinance in place. Review on an annual basis to ensure that it continues to address our needs.

BMP categories to be implemented	Measurable goals and timeframes
Amend Ordinances	Update our city permit and ordinances to meet the General Permit rules within 12 months of permit coverage.
Written Inspection Procedures	Develop written procedures for inspections within 12 months of permit coverage.
Develop ERP's	Review existing ordinance and create ERP's within 12 months of permit coverage.

4. Provide the name or the position title of the individual(s) who is responsible for implementing and/or coordinating this MCM:

   Public Works Director Steve Scherer

   600 Clydesdale Trail, Medina, MN 55340 (763-473-8842)

E. MCM 5: Post-construction stormwater management

1. The Permit (Part III.D.5.) requires that, within 12 months of the date permit coverage is extended, existing permittees shall revise their current program, as necessary, and continue to implement and enforce a post-construction stormwater management program. Describe your current program:

   We have a post-construction stormwater management ordinace that requires the use of BMPs for stormwater runoff from new and redevelopment projects, as well as to ensure the maintenance and operation of the stormwater BMPs. All projects that meet the thresholds are reviewed by engineering staff to ensure that they meet the ordinance requirements. We also have a Storm Water Design Maual that is provided to site developers with specific information as it relates to design procedures. All supporting documentation is retained in the project files.

2. Have you established written procedures for site plan reviews that you will conduct prior to the start of construction activity? ☒ Yes ☐ No

3. Answer **yes** or **no** to indicate whether you have the following listed procedures for documentation of post-construction stormwater management according to the specifications of Permit (Part III.D.5.c.):

   a. Any supporting documentation that you use to determine compliance with the Permit (Part III.D.5.a), including the project name, location, owner and operator of the construction activity, any ☒ Yes ☐ No

checklists used for conducting site plan reviews, and any calculations used to determine compliance?

b. All supporting documentation associated with mitigation projects that you authorize? ☐ Yes ☒ No

c. Payments received and used in accordance with Permit (Part III.D.5.a.(4)(f))? ☐ Yes ☒ No

d. All legal mechanisms drafted in accordance with the Permit (Part III.D.5.a.(5)), including date(s) of the agreement(s) and names of all responsible parties involved? ☐ Yes ☒ No

If you answered **no** to any of the above permit requirements, describe the steps that will be taken to assure that, within 12 months of the date permit coverage is extended, these permit requirements are met.

Amend post construction program to include mitigation and fee in-lieu provisions and revise maintenance agreement requirements to include provisions for changed site conditions within 12 months of permit coverage.

4. List the categories of BMPs that address your post-construction stormwater management program. Use the first table for categories of BMPs that you have established and the second table for categories of BMPs that you plan to implement over the course of the permit term.

   Include the measurable goals with appropriate timeframes that each BMP category will be implemented and completed. In addition, provide interim milestones and the frequency of action in which the permittee will implement and/or maintain the BMPs. Refer to the EPA's *Measurable Goals Guidance for Phase II Small MS4s* (http://www.epa.gov/npdes/pubs/measurablegoals.pdf). **If you have more than five categories**, hit the tab key after the last line to generate a new row.

Established BMP categories	Measurable goals and timeframes
Post Construction Stormwater Ordinance	Number of sites evaluated to ensure conformance. Review annually.
Maintenance Agreements for Privately Owner BMP's	Number of Maintenance Agreements executed on an annual basis.
Stormwater Design Manual	Provided to site developers as projects are proposed.

BMP categories to be implemented	Measurable goals and timeframes
Amend Maintenance Agreement content	Within 12 months of permit coverage
Post Construction Stormwater Ordinance	Revise within 12 months of permit coverage.
Stormwater Design Manual	Revise within 12 months of permit coverage. Utilize for reviewing site plans, mitigation projects, and fee in-lieu payments.

5. Provide the name or the position title of the individual(s) who is responsible for implementing and/or coordinating this MCM:

   Public Works Director Steve Scherer

   600 Clydesdale Trail, Medina, MN 55340 (763-473-8842)

F. MCM 6: Pollution prevention/good housekeeping for municipal operations

1. The Permit (Part III.D.6.) requires that, within 12 months of the date permit coverage is extended, existing permittees shall revise their current program, as necessary, and continue to implement an operations and maintenance program that prevents or reduces the discharge of pollutants from the permittee owned/operated facilities and operations to the small MS4. Describe your current program:

   Our current program focuses on education and proper maintenance of City owned facilities and equipment.

2. Do you have a facilities inventory as outlined in the Permit (Part III.D.6.a.)? ☐ Yes ☒ No

3. If you answered **no** to the above permit requirement in question 2, describe the tasks and corresponding schedules that will be taken to assure that, within 12 months of the date permit coverage is extended, this permit requirement is met:

   First, we will identify the City owned/operated facilities that must be inventoried within and within 12 months of permit

coverage develop and implement additional BMP's if necessary.

4. List the categories of BMPs that address your pollution prevention/good housekeeping for municipal operations program. Use the first table for categories of BMPs that you have established and the second table for categories of BMPs that you plan to implement over the course of the permit term.

   Include the measurable goals with appropriate timeframes that each BMP category will be implemented and completed. In addition, provide interim milestones and the frequency of action in which the permittee will implement and/or maintain the BMPs. For an explanation of measurable goals, refer to the EPA's *Measurable Goals Guidance for Phase II Small MS4s* (http://www.epa.gov/npdes/pubs/measurablegoals.pdf).

   If you have more than five categories, hit the tab key after the last line to generate a new row.

Established BMP categories	**Measurable goals and timeframes**
Street Sweeping	Once a year in the spring after snow melts for entire city and second sweep in Independence Beach area in fall after leaf drop.
Pollution Control Device inspections	Inspect annually.
Sediment Basin and Outfall inspections	Inspect 20% each year.
Hazardous Materials Storage Program	Number of regularly inspected storage units and establishment of containment protocols. Review annually.
Lawn Care and Landscaping Practices	Amount of fertilizer used; amount of pesticides and herbicides applied; number of city employees trained. Evaluate annually.
City Owned Equipment Maintenance Program	Number of vehicles inspected for leaks; amount of spill cleanup material used. Evaluate annually.
Street Deicing Program	Amount of alternative products used.
Storm Drain Cleaning Program	Clean storm sewer as needed or every 3 years. Length of storm sewer cleaned.

BMP categories to be implemented	**Measurable goals and timeframes**
Pollution Control Device Inspections	Inspect all annually.
Determine TSS and TP treatment effectiveness of City owned/operate ponds	Develop procedures and a schedule within 12 months of permit coverage. MPCA approval of method, within 36 months of permit coverage. Begin evaluating ponds within 48 months of permit coverage.
Facilities Inventory	Complete facilities inventory and develop BMP's to reduce pollutants to MEP within 12 months of permit coverage.
Stockpile, Storage and Material Handling Area Inspections	Conduct inspections quarterly.
Municipal Operations Training Program	Develop a written training program consistent with permit requirements within 12 months of permit coverage.

5. Does discharge from your MS4 affect a Source Water Protection Area (Permit Part III.D.6.c.)? ☐ Yes ☒ No

   a. If **no**, continue to 6.

   b. If **yes**, the Minnesota Department of Health (MDH) is in the process of mapping the following items. Maps are available at http://www.health.state.mn.us/divs/eh/water/swp/maps/index.htm. Is a map including the following items available for your MS4:

      1) Wells and source waters for drinking water supply management areas identified as vulnerable under Minn. R. 4720.5205, 4720.5210, and 4720.5330? ☐ Yes ☐ No

      2) Source water protection areas for surface intakes identified in the source water assessments conducted by or for the Minnesota Department of Health under the federal Safe Drinking Water Act, U.S.C. §§ 300j – 13? ☐ Yes ☐ No

   c. Have you developed and implemented BMPs to protect any of the above drinking water ☐ Yes ☐ No

sources?

6. Have you developed procedures and a schedule for the purpose of determining the TSS and TP treatment effectiveness of all permittee owned/operated ponds constructed and used for the collection and treatment of stormwater, according to the Permit (Part III.D.6.d.)? ☐ Yes ☒ No

7. Do you have inspection procedures that meet the requirements of the Permit (Part III.D.6.e.(1)-(3)) for structural stormwater BMPs, ponds and outfalls, and stockpile, storage and material handling areas? ☐ Yes ☒ No

8. Have you developed and implemented a stormwater management training program commensurate with each employee's job duties that:

   a. Addresses the importance of protecting water quality? ☒ Yes ☐ No

   b. Covers the requirements of the permit relevant to the duties of the employee? ☐ Yes ☒ No

   c. Includes a schedule that establishes initial training for new and/or seasonal employees and recurring training intervals for existing employees to address changes in procedures, practices, techniques, or requirements? ☐ Yes ☒ No

9. Do you keep documentation of inspections, maintenance, and training as required by the Permit (Part III.D.6.h.(1)-(5))? ☒ Yes ☐ No

If you answered **no** to any of the above permit requirements listed in **Questions 5 – 9**, then describe the tasks and corresponding schedules that will be taken to assure that, within 12 months of the date permit coverage is extended, these permit requirements are met:

The procedure for determining TSS and TP removal efficiency for all permittee owned/operated ponds will require significant investigation as well as guidance from the MPCA to ensure that the method chosen will be accepted. Within 12 months of permit coverage we will investigate the various methods of performing the evaluation and determine a method that best suits the needs for Medina, as well as a schedule. After a method is chosen, we will send a summary of the method to MPCA staff to ensure that the method will be accepted. After MPCA approval of the method, we will begin evaluating the ponds as budgets allow. The completion of the evaluation is expected to go beyond this permit term.

Although inspections procedures exist, they are not currently in writing. We will develop written procedures for performing inspections within 12 months of permit coverage.

Although employees currently receive training, there is not a written schedule that establishes training for new and/or seasonal employees and training intervals. We will develop a written schedule for training within 12 months of permit coverage.

10. Provide the name or the position title of the individual(s) who is responsible for implementing and/or coordinating this MCM:

Public Works Director Steve Scherer

600 Clydesdale Trail, Medina, MN 55340 (763-473-8842)

VI. Compliance Schedule for an Approved Total Maximum Daily Load (TMDL) with an Applicable Waste Load Allocation (WLA) (Part II.D.6.)

A. Do you have an approved TMDL with a Waste Load Allocation (WLA) prior to the effective date of the Permit? ☒ Yes ☐ No

   1. If **no**, continue to section VII.

   2. If **yes**, fill out and attach the MS4 Permit TMDL Attachment Spreadsheet with the following naming convention**:** *MS4NameHere_TMDL.*

      This form is found on the MPCA MS4 website: http://www.pca.state.mn.us/ms4.

VII. Alum or Ferric Chloride Phosphorus Treatment Systems (Part II.D.7.)

A. Do you own and/or operate any Alum or Ferric Chloride Phosphorus Treatment Systems which are regulated by this Permit (Part III.F.)? ☐ Yes ☒ No

   1. If **no**, this section requires no further information.

   2. If **yes**, you own and/or operate an Alum or Ferric Chloride Phosphorus Treatment System within your small MS4, then you must submit the Alum or Ferric Chloride Phosphorus Treatment Systems Form supplement to this document, with the following naming convention: *MS4NameHere_TreatmentSystem*.

      This form is found on the MPCA MS4 website: http://www.pca.state.mn.us/ms4.

VIII. Add any Additional Comments to Describe Your Program

Minnesota Pollution Control Agency
520 Lafayette Road North
St. Paul, MN 55155-4194

MS4 Permit TMDL Attachment Spreadsheet

Municipal Separate Storm Sewer Systems (MS4) Program

Total Maximum Daily Load (TMDL)

Doc Type: Permit Application

Instructions

This form is to be completed and submitted with your MS4 SWPPP Document. Please navigate through this form using the tabs at the bottom of the page. An example of a mock completed form is provided to you as a reference. Please refer to the "Addressing TMDL Requirements in MS4 General Permit Applications and Stormwater Pollution Prevention Program Documents" PDF for additional assitance, instructions, and basic background information on TMDLs.

TMDL Wasteload Allocation Excel Spreadsheet PART II.D.6.a.-e.

Copy and paste from the Master List MS4 TMDL Spreadsheet for your MS4 to the space below.

*Attach this completed form with your SWPPP Document at the time of submittal. At a **minimum**, provide all of the information "*" items (TMDL Project Name, Type of WLA, Numeric WLA, Unit, Flow Condition, and Pollutant of Concern).*

EXAMPLE

Permittee name	Preferred ID	TMDL project name*	Waterbody ID	Type of WLA*	Numeric WLA*	Unit*	Percent reduction	Flow condition*	Waterbody name	Pollutant of concern	Date approved
Cleanwater Township	MS400653	Red Creek: Lack of a Coldwater Assemblage and Impaired Biota TMDL	02030005-470	Individual	296	lbs/day	74%	High	Red Creek; Highway 129 West Crossing to Red River	TSS	12/16/2009
Cleanwater Township	MS400653	Red Creek: Lack of a Coldwater Assemblage and Impaired Biota TMDL	02030005-470	Individual	139	lbs/day	74%	Moist	Red Creek; Highway 129 West Crossing to Red River	TSS	12/16/2009
Cleanwater Township	MS400653	Red Creek: Lack of a Coldwater Assemblage and Impaired Biota TMDL	02030005-470	Individual	100	lbs/day	74%	Mid-Range	Red Creek; Highway 129 West Crossing to Red River	TSS	12/16/2009
Cleanwater Township	MS400653	Red Creek: Lack of a Coldwater Assemblage and Impaired Biota TMDL	02030005-470	Individual	80	lbs/day	74%	Dry	Red Creek; Highway 129 West Crossing to Red River	TSS	12/16/2009
Cleanwater Township	MS400653	Red Creek: Lack of a Coldwater Assemblage and Impaired Biota TMDL	02030005-470	Individual	65	lbs/day	74%	Low	Red Creek; Highway 129 West Crossing to Red River	TSS	12/16/2009
Cleanwater Township	MS400653	Red Creek: Lack of a Coldwater Assemblage and Impaired Biota TMDL	02030005-470	Individual	289	million KJ/day	6%	High	Red Creek; Highway 129 West Crossing to Red River	Thermal Loading	12/16/2009
Cleanwater Township	MS400653	Red Creek: Lack of a Coldwater Assemblage and Impaired Biota TMDL	02030005-470	Individual	55	million KJ/day	6%	Moist	Red Creek; Highway 129 West Crossing to Red River	Thermal Loading	12/16/2009
Cleanwater Township	MS400653	Red Creek: Lack of a Coldwater Assemblage and Impaired Biota TMDL	02030005-470	Individual	23.6	million KJ/day	6%	Mid-Range	Red Creek; Highway 129 West Crossing to Red River	Thermal Loading	12/16/2009
Cleanwater Township	MS400653	Red Creek: Lack of a Coldwater Assemblage and Impaired Biota TMDL	02030005-470	Individual	11.4	million KJ/day	6%	Dry	Red Creek; Highway 129 West Crossing to Red River	Thermal Loading	12/16/2009
Cleanwater Township	MS400653	Red Creek: Lack of a Coldwater Assemblage and Impaired Biota TMDL	02030005-470	Individual	6.2	million KJ/day	6%	Low	Red Creek; Highway 129 West Crossing to Red River	Thermal Loading	12/16/2009
Cleanwater Township	MS400653	Yellow Lake Phosphorus TMDL	82-0099-00	Individual	0.0082	lbs/day	50%	N/A	Yellow Lake	Phosphorus	9/3/2012
Cleanwater Township	MS400653	Blue Lake Nutrient TMDL	82-0049-00	Categorical	24.1	lbs/day	34%	N/A	Blue Lake	Phosphorus	5/8/2012
Cleanwater Township	MS400653	Big River Basin Basin Fecal Coliform Bacteria TMDL	07040004-544	Categorical	5.17	10^12 organisms/month		High	Big River; Little Creek to Cleanwater Dam	Fecal Coliform	6/5/2007
Cleanwater Township	MS400653	Big River Basin Basin Fecal Coliform Bacteria TMDL	07040004-544	Categorical	1.97	10^12 organisms/month		Moist	Big River; Little Creek to Cleanwater Dam	Fecal Coliform	6/5/2007
Cleanwater Township	MS400653	Big River Basin Basin Fecal Coliform Bacteria TMDL	07040004-544	Categorical	1.26	10^12 organisms/month		Mid-Range	Big River; Little Creek to Cleanwater Dam	Fecal Coliform	6/5/2007
Cleanwater Township	MS400653	Big River Basin Basin Fecal Coliform Bacteria TMDL	07040004-544	Categorical	0.54	10^12 organisms/month		Dry	Big River; Little Creek to Cleanwater Dam	Fecal Coliform	6/5/2007
Cleanwater Township	MS400653	Big River Basin Basin Fecal Coliform Bacteria TMDL	07040004-544	Categorical	0.18	10^12 organisms/month		Low	Big River; Little Creek to Cleanwater Dam	Fecal Coliform	6/5/2007
Cleanwater Township	MS400653	Small Lake Excess Nutrient TMDL	65-0086-00	Categorical	0.55	lbs/day	17%	N/A	Small Lake	Phosphorus	3/19/2010
Cleanwater Township	MS400653	Eagle Creek Bacteria TMDL	07010205-319	Categorical	539.43	10^9 organisms/day	0%	High	Eagle Creek: Eagle Lake to Big Creek	E. Coli	2/14/2012
Cleanwater Township	MS400653	Eagle Creek Bacteria TMDL	07010205-319	Categorical	203.99	10^9 organisms/day	0%	Moist	Eagle Creek: Eagle Lake to Big Creek	E. Coli	2/14/2012
Cleanwater Township	MS400653	Eagle Creek Bacteria TMDL	07010205-319	Categorical	101.84	10^9 organisms/day	0%	Mid-Range	Eagle Creek: Eagle Lake to Big Creek	E. Coli	2/14/2012
Cleanwater Township	MS400653	Eagle Creek Bacteria TMDL	07010205-319	Categorical	61.01	10^9 organisms/day	0%	Dry	Eagle Creek: Eagle Lake to Big Creek	E. Coli	2/14/2012
Cleanwater Township	MS400653	Eagle Creek Bacteria TMDL	07010205-319	Categorical	26.95	10^9 organisms/day	0%	Low	Eagle Creek: Eagle Lake to Big Creek	E. Coli	2/14/2012

TMDL Wasteload Allocation Excel Spreadsheet PART II.D.6.a.-e.

Copy and paste from the Master List MS4 TMDL Spreadsheet for your MS4 to the space below.

Attach this completed form with your SWPPP Document at the time of submittal. At a ***minimum,*** *provide all of the information "*" items (TMDL Project Name, Type of WLA, Numeric WLA, Unit, Flow Condition, and Pollutant of Concern).*

Permittee name	Preferred ID	TMDL project name*	Waterbody ID	Type of WLA*	Numeric WLA*	Unit*	Percent reduction	Flow condition*	Waterbody name	Pollutant of concern*	Date approved
Medina City	MS400105	Lake Independence Phosphorus TMDL	27-0176-00	Individual	0.63	lbs/day		N/A	Lake Independence	Phosphorus	2/23/2007
Medina City	MS400105	Lake Sarah Nutrient TMDL	27-0191-01 & 27-0191-02	Individual	0.255	lbs/day		N/A	Lake Sarah (West and Ea	Phosphorus	4/25/2011

Compliance Schedule PART II.D.6.f.-g.

Is your MS4 currently meeting its WLA for one assessed TMDL?
☒ NO (Complete Table 1. Attachment for continued BMP implementation beyond the term of this permit, and Table 2 below) **Go to:** Table 1 **Go to:** Attachment... **Go to:** Table 2

If YES, indicate the WLAs (may be grouped by TMDL Project) you believe are reasonably being met. For each WLA, list the implemented BMPs and provide a narrative strategy for the long-term continuation of meeting each WLA. PART II.D.6.g.(1)-(2)

Table 1
Fill in the following table with your Interim Milestones, BMP IDs, and Implementation Dates. Replace "TMDL Project Name & Pollutant" Columns with each TMDL Project Name and the corresponding pollutant. Then put an "X" in the boxes for the TMDL that corresponds with each BMP. PART II.D.6.f.(1)-(2)

NOTE:
It is recommended to assign each Interim Milestone (BMP) a BMP ID. You will be required to report on the status of each Interim Milestone and include a BMP ID for all structural BMPs as part of the MS4 Annual Report (see Part III.C.), so including this in SI numbers at the time of application may be useful in tracking implementation efforts. If a panel that will be included in the pond inventory (Part III.C.2.) is to be applied toward a WLA, use the same ID for both the pond inventory and TMDL tracking. Non-structural BMPs are not required to have an ID, but it may be useful to assign it an ID for internal MS4 recordkeeping.

MPCA recommends the Implementation Dates align with the submittal of MS4 Annual Reports. Dates selected may not reflect the actual date a BMP is implemented, but shall indicate a BMP will be implemented on that date or before for that reporting year.

Interim Milestone (Best Management Practice)	BMP ID	Implementation Date	Lake Sarah - Excessive Nutrients - Phosphorus	Lake Independence - Excessive Nutrients - Phosphorus	TMDL Project Name & Pollutant1	TMDL Project Name & Pollutant2	TMDL Project Name & Pollutant3	TMDL Project Name & Pollutant4	TMDL Project Name & Pollutant5	TMDL Project Name & Pollutant6	TMDL Project Name & Pollutant7	TMDL Project Name & Pollutant8	TMDL Project Name & Pollutant9	TMDL Project Name & Pollutant10	TMDL Project Name & Pollutant11	TMDL Project Name & Pollutant12	TMDL Project Name & Pollutant13	TMDL Project Name & Pollutant14	TMDL Project Name & Pollutant15	TMDL Project Name & Pollutant16	TMDL Project Name & Pollutant17	TMDL Project Name & Pollutant18	TMDL Project Name & Pollutant19	TMDL Project Name & Pollutant20	TMDL Project Name & Pollutant21	TMDL Project Name & Pollutant22
Complete Lyndale Bulkhead Removalin Treatment Channel and Stormwater Ponds	PONDS-001	6/30/2014																							
Enhance erosion use of stormwater for irrigation for various properties if within city water service area	CODE-006	6/30/2014	X	X																					
Rehabilitated and nonrehabilitated file cabinets for Transitional Trail walked area to be lined for Half Moon Lake	FILTER-005	6/30/2015		X																					
Enhance street sweeping programs in Independence Beach (Dirty)	PROGRAM-007	6/30/2015		X																					
Enhance street sweeping programs in Lake Sarah Heights (Dirty) Increase amount of sweepings	PROGRAM-008	6/30/2015		X																					
CCTV sewer and manhole inspections	INSP-009	6/30/2015	X	X																					
MTS sanitary sewer maintenance completed and inspected every three years	INSP-010	6/30/2014	X	X																					
Lake Independence composite cost BCL implementation program in CIP	PROGR-011	6/30/2014	X	X																					
Create stormwater educational materials including but not as and nonmandatory city website	INFOR-012	6/30/2014	X	X																					
Develop illicit discharge detection and elimination ordinance and update ordinance	CODE-013	6/30/2014	X	X																					
Develop illicit discharge detection and elimination program and update ordinance/procedures, train staff and public to recognize and report illicit discharges	INFOR-014	6/30/2014	X	X																					
Public education campaign on Road Runoff, yard waste disposal, and prescribed illicit discharges	INFOR-015	6/30/2014	X	X																					
Utilizing storm sewer map and land use maps, identify priority areas for illicit discharge inspections	INFOR-016	6/30/2014	X	X																					
Develop and implement plans	PROGR-017	6/30/2014	X	X																					
Determine TP/TSS removal efficiencies for all stormwater assets	PROGR-018	6/30/2015	X	X																					
Inventory assets for inclusion into TP and Critical Stormwater Internal System	PROGR-019	6/30/2015		X																					

Attachment for continued BMP implementation beyond the term of this permit. PART II.D.6.f.(1):
Volume control measures are required as projects to meet the water quality criteria for the City of Windsor's Local Surface Water Management Plan. Volume control shall be required for proposed new impervious area. Volume control must be met by either infiltration or filtration with a 1.1" x (1/12) x area of new impervious area. If volume control is infeasible than a reduction in 20% phosphorus loading non-meeting conditions must be met.

Table 2
Target dates the applicable WLA(s) will be achieved. PART II.D.6.f.(2)

Table Header	Target Date to Achieve WLA
Lake Sarah - Excessive Nutrients - Phosphorus	2014
Lake Independence	2014

Stormwater Pollution Prevention Program

CITY OF

MEDINA

Revised
August 21st, 2008

Stormwater Pollution Prevention Program
Table of Contents

Summary of SWPPP Development Process

Before beginning to select BMPs and Measurable Goals, City staff undertook a self-assessment of our storm water system. Representatives from the firm Bonestroo, Rosene, Anderlik and Associates met with City of Medina staff to facilitate and document the self-assessment process. This was an evaluation of our City's conditions, needs, and practices. The objective of the process was to provide a knowledge base upon which to structure our SWPPP to meet the Permit's Maximum Extent Practicable standard. Details of this process are presented below.

Details of the Self-Assessment Process

The self-assessment was guided by materials included in the League of Minnesota Cities NPDES Phase II MS4 Guide Plan. This self-assessment process was accomplished through a set of discussions and communications between City and Bonestroo staff.

The results of this process include a set of understandings among City staff and written notes that together represent knowledge of our local stormwater system and the conditions that shape it. We have used the results of this self-assessment process to guide our selection of BMPs and Measurable Goals that make up the SWPPP for our Permit Application.

Based on this self-assessment process, our staff has considered the following, as well as additional, factors in order to meet the Maximum Extent Practicable standard set forth in the Permit:

- sources of pollutants
- potentially polluting activities being conducted in the watershed
- sensitivity of receiving waters
- uses of receiving waters
- specific local concerns
- the size of our community
- climate
- implementation schedules
- current ability to finance stormwater programs
- hydrology
- geology
- capacity to perform operation & maintenance
- local land uses
- rate and type of development
- characteristics of our watershed
- organizational characteristics of our city

In addition to the self-assessment process discussed above, our staff has also considered the non-stormwater discharges listed below to determine whether they should be identified as significant contributors of pollutants to our stormwater system. We have determined that they are not significant contributors of pollutants to the Medina stormwater system.

- water line flushing
- landscape irrigation
- diverted stream flows

- rising ground waters
- uncontaminated ground water infiltration
- uncontaminated pumped ground water
- discharges from potable water sources
- foundation drains
- air conditioning condensation
- irrigation water
- springs
- water from crawl space pumps
- footing drains
- lawn watering
- individual residential car washing
- flows from riparian habitats and wetlands
- dechlorinated swimming pool discharges
- street wash water
- discharge or flows from fire fighting activities.

Permit Completion

The self-assessment process led to the development of this SWPPP, with appropriate BMPs and measurable goals for the City. The final SWPPP includes both existing and proposed BMPs, responsible persons, measurable goals, and timelines for implementation.

City of Medina SWPPP BMP Summary Matrix

BMP	Title	Public Education and Outreach	Public Participation and Involvement	Illicit Discharge Detection and Elimination	Construction Site Runoff Controls	Post-Construction Stormwater Management	Pollution Prevention/Good housekeeping
		1	2	3	4	5	6
1-1	Applicable Public Notice Requirements	X					
1-2	Educate the Public on Stormwater Issues by coordinating the delivery of public education and outreach BMP's	X	X	X	X	X	X
1-3	Public Newsletter Distribution	X	X	X	X	X	X
1-4	MS4 Participation with Watershed Partners	X	X	X	X	X	X
1-5	Listening Sessions with homeowners, garden shops, groundskeepers, horse farms, and other agricultural related activities.	X	X	X	X	X	X
1-6	City of Medina Website for Storm Water Concerns	X	X	X	X	X	X
1-7	Listening Session with K-8 teachers and administrators	X	X				
1-8	Private industry program for Industrial Activities Permit Compliance	X	X	X	X	X	X
2-1	Conduct Annual Meeting to Discuss SWPPP	X	X	X	X	X	X
2-2	Consider Written and Oral Public Input Regarding the SWPPP		X				
2-3	Spring Clean Up Day	X	X	X			X
2-4	Medina Celebration Day	X	X				X
2-5	Stormwater Complaint Procedure	X	X	X	X	X	X

City of Medina SWPPP BMP Summary Matrix Continued…

BMP	Title	Public Education and Outreach	Public Participation and Involvement	Illicit Discharge Detection and Elimination	Construction Site Runoff Controls	Post-Construction Stormwater Management	Pollution Prevention/Good housekeeping
		1	2	3	4	5	6
3-1	Storm Sewer System Map			X			
3-2	Illicit Discharge, Detection, and Enforcement Ordinance			X			
3-3	Illicit Discharge and Detection Program			X			
3-4	Employee and General Public Illicit Discharge Education Program			X			
4-1	Construction Site Storm Water Runoff Ordinance				X		
4-2	Erosion and Sediment Control Best Management Practices (BMPs)				X		
4-3	Construction Site Waste Control Issues				X		
4-4	Construction Site Plan Review Process				X		
4-5	Construction Site Complaint Procedure				X		
4-6	Construction Site Inspection and Enforcement Program				X		
4-7	Construction Site Enforcement Procedures				X		
5-1	Ordinance or Other Regulatory Mechanism to Address Post-construction Runoff From New Development and Redevelopment Projects to the Extent Allowable Under Law.					X	

City of Medina SWPPP BMP Summary Matrix Continued…

BMP	Title	Public Education and Outreach	Public Participation and Involvement	Illicit Discharge Detection and Elimination	Construction Site Runoff Controls	Post-Construction Stormwater Management	Pollution Prevention/Good housekeeping
		1	2	3	4	5	6
5-2	Develop and Implement Strategies, Which Include a Combination of Structural and/or Nonstructural Best Management Practices (BMP's) Appropriate for the City of Medina					X	
5-3	Develop and Ensure Long-term Operation and Maintenance of BMP's Installed as a Requirement of the City of Medina Ordinance Dictating Post-Construction Storm Water Management Practices.					X	
5-4	Develop and Ensure a Site Plan Review Process as a Requirement of the City of Medina Ordinance Dictating Post Construction Storm Water Management Practices.					X	
6-1	Floor Drain Containment Program in Public Works Facilities						X
6-2	Hazardous Materials Storage Program						X

6-3	Landscaping and Lawn Care Practices						X

City of Medina SWPPP BMP Matrix Summary Continued…

BMP	Title	Public Education and Outreach	Public Participation and Involvement	Illicit Discharge Detection and Elimination	Construction Site Runoff Controls	Post-Construction Stormwater Management	Pollution Prevention/Good housekeeping
		1	2	3	4	5	6
6-4	Spill Response Plan						X
6-5	City Owned Equipment Maintenance Program						X
6-6	Sanitary Sewer Maintenance and Inspection Program						X
6-7	Municipal Street Maintenance Program						X
6-8	Structural MS4 Pollution Control Device Inspection and Maintenance Program						X
6-9	Street Deicing Program						X
6-10	ESC Standards During All Municipal Land Disturbance Projects						X
6-11	Outfall and Pond Inspection Program for All City Owned MS4 systems						X
6-12	Storm Drain System Cleaning						X
6-13	Inspection Analysis and Frequency					X	X
6-14	Stockpile, Storage and Material Handling Program			X			X
6-15	Record Keeping and Reporting						X

City of Medina BMP Pages

BMP Page

MS4 Name: City of Medina

Unique Identifying Number: 1-1

Minimum Control Measures Addressed by This BMP

X	Public education & outreach		Construction site runoff controls
	Public participation & involvement		Post-construction stormwater management
	Illicit discharge detection & elimination		Pollution prevention/Good housekeeping

BMP Title:
Applicable Public Notice Requirements

BMP Description:
Prepare a notice of public informational meeting at least 30 days prior to the annual stormwater meeting or any subsequent meetings to discuss the provisions of the SWPPP, its effectiveness, or amendments there to. Include all components listed below and distribute public notices in areas to best notify a diverse group of citizens within the Medina city limits. The notice will include the date, time and location of the public meeting; a concise description of the manner in which the meeting will be conducted and indicate that the SWPPP will be available for public review at the City Hall.

Measurable Goals:

- Completed public notice and attendance at annual meeting for SWPPP review

Timeline / Implementation Schedule:

- 2006-2011 - 30 Day public notice will be published in the Crow River News and in the quarterly City of Medina Newsletter and mailed directly to 1400 households 30 days prior to meeting, informational signs will be posted in three separate locations

Specific Components & Notes (optional):

- Date and time of meeting will coincide with Annual Reporting Process
- Location of the Public Meeting will be at Medina City Hall
- Location of the SWPPP and Annual Report will be at the Medina City Hall at least 60 days prior to the annual meeting
- Locations of Public Notice will be:
  - City designated newspaper
  - Quarterly City Newsletter
- Posted at City Hall and on the City Website

Responsible Person	Responsible Department
Name: Chad Adams	**Title:** Public Works Superintendent
Title: City Administrator	**Dept. Head:** Steve Scherer
Phone: 763-473-4643	**Phone:** 763-473-4643
E-mail: Chad.Adams@ci.medina.mn.us	**E-mail:** Steve.Scherer@ci.medina.mn.us

Educational components related to this BMP (description or number – optional):

Audience: General Public Educational goal: Give the general public awareness and knowledge of the stormwater meeting date, time, meeting process, and subject. Activities: See BMP Description above Implementation Plans: See Timeline/Implementation Schedule above Performance Measures: See Measurable Goals above

BMP Page

MS4 Name: City of Medina

Unique Identifying Number: 1-2

Minimum Control Measures Addressed by This BMP

X	Public education & outreach	X	Construction site runoff controls
X	Public participation & involvement	X	Post-construction stormwater management
X	Illicit discharge detection & elimination	X	Pollution prevention/Good housekeeping

BMP Title:
Public Information Program

BMP Description:
Educate the Public on Stormwater Issues by coordinating the delivery of public education and outreach BMP's

Measurable Goals:	**Timeline / Implementation Schedule:**
• Adjustments made to SWPPP • Amount of stormwater information distributed	• 2006-2011 – Review existing community stormwater programs and determine if coordination is possible • 2006-2011 – Develop informational materials. • 2006-2011 – Distribute informational materials and make available to the public.

Specific Components & Notes (optional):

Responsible Person	**Responsible Department**
Name: Chad Adams	**Title:** Public Works Superintendent
Title: City Administrator	**Dept. Head:** Steve Scherer
Phone: 763-473-4643	**Phone:** 763-473-4643
E-mail: Chad.Adams@ci.medina.mn.us	**E-mail:** Steve.Scherer@ci.medina.mn.us

Educational components related to this BMP (description or number – optional):
Audience: General Public
Educational goal: Give the general public awareness and understanding of the storm water issues, volunteer opportunities, contacts, and regulations.
Activities: See BMP Description above
Implementation Plans: See Timeline/Implementation Schedule above
Performance Measures: See Measurable Goals above

BMP Page

MS4 Name: City of Medina

Unique Identifying Number: 1-3

Minimum Control Measures Addressed by This BMP

X	Public education & outreach	X	Construction site runoff controls
X	Public participation & involvement	X	Post-construction stormwater management
X	Illicit discharge detection & elimination	X	Pollution prevention/Good housekeeping

BMP Title:
Public Newsletter Distribution

BMP Description:
Incorporate Stormwater Issues into Public Newsletter.

Measurable Goals:
- Stormwater article included in quarterly newsletter
- Newsletter shall target residents, horse farms, livestock operators and other agricultural activities at least once per year

Timeline / Implementation Schedule:
- 2006-2011 – Determine new material to include in newsletter
- 2006-2011 – Include storm water articles in newsletter
- 2009-2011 - Include storm water articles in the newsletter that target residents, horse farms, livestock operators and other agricultural activities at least once per year

Specific Components & Notes (optional):

Responsible Person	Responsible Department
Name: Chad Adams	**Title:** Public Works Superintendent
Title: City Administrator	**Dept. Head:** Steve Scherer
Phone: 763-473-4643	**Phone:** 763-473-4643
E-mail: Chad.Adams@ci.medina.mn.us	**E-mail:** Steve.Scherer@ci.medina.mn.us

Educational components related to this BMP (description or number – optional):
Audience: General Public
Educational goal: Give the general public awareness and understanding of the storm water issues and volunteer opportunities
Activities: See BMP Description above
Implementation Plans: See Timeline/Implementation Schedule above
Performance Measures: See Measurable Goals above

BMP Page

MS4 Name: City of Medina

Unique Identifying Number: 1-4

Minimum Control Measures Addressed by This BMP

X	Public education & outreach	X	Construction site runoff controls
X	Public participation & involvement	X	Post-construction storm water management
X	Illicit discharge detection & elimination	X	Pollution prevention/Good housekeeping

BMP Title:
MS4 Participation with Watershed Partners

BMP Description:
The City of Medina will participate with the Watershed Partner's communications campaign, including newspaper, radio, ad TV spots and ready to use press releases and publications, in addition to creating unique features to the City of Medina.

Measurable Goals:
- Number of items used from the Watershed Partner's media guide.

Timeline / Implementation Schedule:
- 2006-2011 - This is a current city program. Annually review and update as needed.

Specific Components & Notes (optional):
- Brochures to homeowners regarding debris collection and disposal
- Newsletter articles regarding storm water

Responsible Person	Responsible Department
Name: Chad Adams	**Title:** Public Works Superintendent
Title: City Administrator	**Dept. Head:** Steve Scherer
Phone: 763-473-4643	**Phone:** 763-473-4643
E-mail: Chad.Adams@ci.medina.mn.us	**E-mail:** Steve.Scherer@ci.medina.mn.us

Educational components related to this BMP (description or number – optional):
Audience: General Public, Business Owners, Contractors, Developers, School Children
Educational goal: Ensure efficient delivery and coverage of stormwater related education materials and provide an understanding of the storm water issues and volunteer opportunities.
Activities: See BMP Description above
Implementation Plans: See Timeline/Implementation Schedule above
Performance Measures: See Measurable Goals above

BMP Page

MS4 Name: City of Medina

Unique Identifying Number: 1-5

Minimum Control Measures Addressed by This BMP

X	Public education & outreach	X	Construction site runoff controls
X	Public participation & involvement	X	Post-construction storm water management
X	Illicit discharge detection & elimination	X	Pollution prevention/Good housekeeping

BMP Title:
Listening Sessions with homeowners, garden shops, groundskeepers, horse farms, and other agricultural related activities.

BMP Description:
These will be informational sessions with the appropriate community members to determine where the City of Medina needs to target educational efforts for the following 2006 – 2011 permit cycle.

Measurable Goals:
- Number of informational listening sessions held
- Number of informational listening sessions that targeted the Lake Independence watershed

Timeline / Implementation Schedule:
- 2006-2011 - Target at a minimum of 2 sessions per year
- 2009 -2011 - A minimum of 1 session per year should be targeted towards the Lake Independence watershed

Specific Components & Notes (optional):

Responsible Person	Responsible Department
Name: Chad Adams	**Title:** Public Works Superintendent
Title: City Administrator	**Dept. Head:** Steve Scherer
Phone: 763-473-4643	**Phone:** 763-473-4643
E-mail: Chad.Adams@ci.medina.mn.us	**E-mail:** Steve.Scherer@ci.medina.mn.us

Educational components related to this BMP (description or number – optional):
Audience: General Public and Business Owners
Educational goal: Communicate with general public and business owners to assure education efforts are achieving desired outcomes.
Activities: See BMP Description above
Implementation Plans: See Timeline/Implementation Schedule above
Performance Measures: See Measurable Goals above

BMP Page

MS4 Name: City of Medina

Unique Identifying Number: 1-6

Minimum Control Measures Addressed by This BMP

X	Public education & outreach	X	Construction site runoff controls
X	Public participation & involvement	X	Post-construction storm water management
X	Illicit discharge detection & elimination	X	Pollution prevention/Good housekeeping

BMP Title:
City of Medina Website for Storm Water Concerns

BMP Description:
The City of Medina will develop and maintain a city website that includes storm water related information.

Measurable Goals:

- Development of website
- SWPPP available on website
- Provide links to stormwater related websites
- Provide information on the Lake Independence TMDL targeted to residents, horse farms, livestock operators and other agricultural activities within the Lake Independence watershed

Timeline / Implementation Schedule:

- 2007-2008 - Determine scope, budget, and feasibility of website
- 2008 - Determine storm water connection to web site and what relevant data will be included
- 2008-2011 - Provide regular comprehensive contributions to website and storm water information
- 2009 - Update the website to include information on the Lake Independence TMDL targeted to residents, horse farms, livestock operators and other agricultural activities within the Lake Independence watershed
- 2009-2011 - Annually review and update as needed

Specific Components & Notes (optional):

Responsible Person	Responsible Department
Name: Chad Adams	**Title:** Public Works Superintendent
Title: City Administrator	**Dept. Head:** Steve Scherer
Phone: 763-473-4643	**Phone:** 763-473-4643
E-mail: Chad.Adams@ci.medina.mn.us	**E-mail:** Steve.Scherer@ci.medina.mn.us

Educational components related to this BMP (description or number – optional):
Audience: General Public, Business Owners, Contractors, Developers
Educational goal: Give General Public, Business Owners, Contractors, and Developers awareness and understanding of the storm water issues, volunteer opportunities, contacts, and regulations.
Activities: See BMP Description above

Implementation Plans: See Timeline/Implementation Schedule above Performance Measures: See Measurable Goals above

BMP Page

MS4 Name: City of Medina

Unique Identifying Number: 1-7

Minimum Control Measures Addressed by This BMP

X	Public education & outreach		Construction site runoff controls
X	Public participation & involvement		Post-construction storm water management
	Illicit discharge detection & elimination		Pollution prevention/Good housekeeping

BMP Title:
Listening Session with K-8 Teachers and Administrators

BMP Description:
Listening Session with K-8 teachers and administrators about how storm water education could fit into classroom curriculums, for all appropriate school systems

Measurable Goals:	Timeline / Implementation Schedule:
• Number of listening sessions held with educational personnel	• 2006-2011 Hold at least one educational listening session per year with appropriate persons

Specific Components & Notes (optional):

Responsible Person	Responsible Department
Name: Chad Adams	**Title:** Public Works Superintendent
Title: City Administrator	**Dept. Head:** Steve Scherer
Phone: 763-473-4643	**Phone:** 763-473-4643
E-mail: Chad.Adams@ci.medina.mn.us	**E-mail:** Steve.Scherer@ci.medina.mn.us

Educational components related to this BMP (description or number – optional):
Audience: K-8 teachers and administrators
Educational goal: Open communication with local educators to ensure appropriate delivery of stormwater related educational programs to school children.
Activities: See BMP Description above
Implementation Plans: See Timeline/Implementation Schedule above
Performance Measures: See Measurable Goals above

BMP Page

MS4 Name: City of Medina

Unique Identifying Number: 1-8

Minimum Control Measures Addressed by This BMP

X	Public education & outreach	X	Construction site runoff controls
X	Public participation & involvement	X	Post-construction storm water management
X	Illicit discharge detection & elimination	X	Pollution prevention/Good housekeeping

BMP Title:
Private Industry Program for Industrial Activities Permit Compliance

BMP Description:
The City of Medina will work with an outside consulting firm to develop and implement an educational program for private industrial businesses located within the city limits to aid in their industrial activities permit compliance and submittal.

Measurable Goals:	Timeline / Implementation Schedule:
• Number of businesses which participated with the city in filing an industrial activities permit.	• 2006-2011 - Hold at least one educational session regarding the industrial activities permit per year with appropriate business personnel.

Specific Components & Notes (optional):

Responsible Person	Responsible Department
Name: Chad Adams	**Title:** Public Works Superintendent
Title: City Administrator	**Dept. Head:** Steve Scherer
Phone: 763-473-4643	**Phone:** 763-473-4643
E-mail: Chad.Adams@ci.medina.mn.us	**E-mail:** Steve.Scherer@ci.medina.mn.us

Educational components related to this BMP (description or number – optional):
Audience: Business Owners
Educational goal: Ensure open communication with Business Owners and educate them about stormwater regulations affecting industrial activities.
Activities: See BMP Description above
Implementation Plans: See Timeline/Implementation Schedule above
Performance Measures: See Measurable Goals above

BMP Page

MS4 Name: City of Medina

Unique Identifying Number: 2-1

Minimum Control Measures Addressed by This BMP

X	Public education & outreach	X	Construction site runoff controls
X	Public participation & involvement	X	Post-construction stormwater management
X	Illicit discharge detection & elimination	X	Pollution prevention/Good housekeeping

BMP Title:
Conduct Annual Meeting to Discuss SWPPP

BMP Description:
The City of Medina will hold an annual meeting to discuss and consider public input regarding the city's storm water management practices and receive public input on the adequacy and effectiveness of the SWPPP.

Measurable Goals:
- Completed annual meeting and had public attendance at this meeting

Timeline / Implementation Schedule:
- 2006-2011 – Meeting will be held annually prior to the June 30th annual report submittal deadline.

Specific Components & Notes (optional): The specific components listed below will be considered when developing and implementing the meeting agenda
- Introduction of City of Medina SWPPP
- Presentation of current city storm water challenges and concerns
- Description of current year SWPPP challenges and changes
- Description of upcoming year SWPPP expectations
- Open forum for public comment
- Conclusion and Notification of Annual Report submission
- Establish meeting procedures and process for internal city staff to discuss the SWPPP and its content
- Consider timely, relevant written materials submitted by the public pertaining to the SWPPP

Responsible Person	Responsible Department
Name: Chad Adams	**Title:** Public Works Superintendent
Title: City Administrator	**Dept. Head:** Steve Scherer
Phone: 763-473-4643	**Phone:** 763-473-4643
E-mail: Chad.Adams@ci.medina.mn.us	**E-mail:** Steve.Scherer@ci.medina.mn.us

Educational components related to this BMP (description or number – optional):
Audience: General Public
Educational goal: Educate the General Public about the SWPPP and provide them an opportunity for oral and written statements concerning the SWPPP.
Activities: See BMP Description above
Implementation Plans: See Timeline/Implementation Schedule above
Performance Measures: See Measurable Goals above

BMP Page

MS4 Name: City of Medina

Unique Identifying Number: 2-2

Minimum Control Measures Addressed by This BMP

	Public education & outreach		Construction site runoff controls
X	Public participation & involvement		Post-construction stormwater management
	Illicit discharge detection & elimination		Pollution prevention/Good housekeeping

BMP Title:
Consider Written and Oral Public Input Regarding the SWPPP

BMP Description:
Analyze the comments and written material and adjust the SWPPP where appropriate.

Measurable Goals:	**Timeline / Implementation Schedule:**
• Adjustments made to SWPPP	• 2006-2011 Ongoing after annual public meeting to discuss SWPPP. Annually review and adjust SWPPP where appropriate.

Specific Components & Notes (optional):
- Document oral and written public comments, and include any appropriate changes into annual report.

Responsible Person	**Responsible Department**
Name: Chad Adams	**Title:** Public Works Superintendent
Title: City Administrator	**Dept. Head:** Steve Scherer
Phone: 763-473-4643	**Phone:** 763-473-4643
E-mail: Chad.Adams@ci.medina.mn.us	**E-mail:** Steve.Scherer@ci.medina.mn.us

Educational components related to this BMP (description or number – optional):
Audience: General Public
Educational goal: Provide public a voice in City stormwater management activities
Activities: See BMP Description above
Implementation Plans: See Timeline/Implementation Schedule above
Performance Measures: See Measurable Goals above

BMP Page

MS4 Name: City of Medina

Unique Identifying Number: 2-3

Minimum Control Measures Addressed by This BMP

X	Public education & outreach		Construction site runoff controls
X	Public participation & involvement		Post-construction stormwater management
X	Illicit discharge detection & elimination	X	Pollution prevention/Good housekeeping

BMP Title:
Spring Clean Up Day

BMP Description:
Involve the public in the specific applicable volunteer programs/events. The examples below are some common volunteer programs used. Other programs, depending on a municipality's self-assessment, will determine the most appropriate way to involve volunteers in the SWPPP.

Measurable Goals:
- Events in the program
- Number of volunteers participating in the program

Timeline / Implementation Schedule:
- 2006-2011 – This event is occurring in the spring of each calendar year. Annually review and update as needed.

Specific Components & Notes (optional): Collection efforts headed up by citizen volunteers and the Medina Parks Commission to collect and properly dispose of materials like:
- Batteries, antifreeze, lawn mowers, tires, mattresses, windows, used appliances, etc.
- Selling of trees, phosphorous free fertilizer, birdhouses, etc.
- Boy scout troops volunteer to pick up roadside trash
- Cooperative Effort to notify citizens in a mail out piece of County Wide Clean Up of Hazardous Waste Materials

Responsible Person	Responsible Department
Name: Chad Adams	**Title:** Public Works Superintendent
Title: City Administrator	**Dept. Head:** Steve Scherer
Phone: 763-473-4643	**Phone:** 763-473-4643
E-mail: Chad.Adams@ci.medina.mn.us	**E-mail:** Steve.Scherer@ci.medina.mn.us

Educational components related to this BMP (description or number – optional):
Audience: General Public, Business Owners, School Children.
Educational goal: Public awareness for the proper disposal of trash, appliances, hazardous and non-hazardous waste. Awareness of BMPs that can be used by homeowners and business owners to prevent stormwater runoff pollution.
Activities: See BMP Description above
Implementation Plans: See Timeline/Implementation Schedule above
Performance Measures: See Measurable Goals above

BMP Page

MS4 Name: City of Medina

Unique Identifying Number: 2-4

Minimum Control Measures Addressed by This BMP

X	Public education & outreach		Construction site runoff controls
X	Public participation & involvement		Post-construction stormwater management
	Illicit discharge detection & elimination	X	Pollution prevention/Good housekeeping

BMP Title:
Medina Celebration Day

BMP Description:
Involve the public in specific applicable stormwater programs/events. The examples below are some common programs used. Additional programs, depending on the municipality's self-assessment, will be used to involve the public in the SWPPP.

Measurable Goals:
- Events in the program
- Number of volunteers participating in the program
- Number of stormwater brochures distributed
- Provide information targeted to residents, horse farms, livestock operators and other agricultural activities within the Lake Independence watershed

Timeline / Implementation Schedule:
- 2006-2011– This event is occurring in the fall of each calendar year. Annually review and update as needed

Specific Components & Notes (optional):
- Presentations on water quality issues and lakeshore management techniques
- Multi-agency participation with DNR Metro Forestry and Wildlife, Three Rivers Park District, and Minnehaha Creek Watershed District

Responsible Person	Responsible Department
Name: Chad Adams	**Title:** Public Works Superintendent
Title: City Administrator	**Dept. Head:** Steve Scherer
Phone: 763-473-4643	**Phone:** 763-473-4643
E-mail: Chad.Adams@ci.medina.mn.us	**E-mail:** Steve.Scherer@ci.medina.mn.us

Educational components related to this BMP (description or number – optional):
Audience: General Public
Educational goal: Give the general public awareness and understanding of the storm water issues, volunteer opportunities, contacts, and regulations.
Activities: See BMP Description above
Implementation Plans: See Timeline/Implementation Schedule above

Performance Measures: See Measurable Goals above

BMP Page

MS4 Name: City of Medina

Unique Identifying Number: 2-5

Minimum Control Measures Addressed by This BMP

	Public education & outreach	X	Construction site runoff controls
X	Public participation & involvement	X	Post-construction stormwater management
X	Illicit discharge detection & elimination	X	Pollution prevention/Good housekeeping

BMP Title:
Storm Water Complaint Procedure

BMP Description:
The City of Medina will maintain a record of public complaints for non-compliance issues related to storm water. The city will annually review their record keeping and how they store information regarding site inspection issues

Measurable Goals:	**Timeline / Implementation Schedule:**
• Number of calls from the community regarding storm water issues • Number of City staff actions initiated based on calls received	• 2006 – Documentation procedure will be complete • 2006-2011 – Annually review and update as needed

Specific Components & Notes (optional):
- Allows citizen reports on illicit discharge detection
- Allows citizen reports on construction site erosion violations
- City complaint receipt program

Responsible Person	**Responsible Department**
Name: Chad Adams	**Title:** Public Works Superintendent
Title: City Administrator	**Dept. Head:** Steve Scherer
Phone: 763-473-4643	**Phone:** 763-473-4643
E-mail: Chad.Adams@ci.medina.mn.us	**E-mail:** Steve.Scherer@ci.medina.mn.us

Educational components related to this BMP (description or number – optional):

BMP Page

MS4 Name: City of Medina

Unique Identifying Number: 3-1

Minimum Control Measures Addressed by This BMP

	Public education & outreach		Construction site runoff controls
	Public participation & involvement		Post-construction stormwater management
X	Illicit discharge detection & elimination		Pollution prevention/Good housekeeping

BMP Title:
Storm Sewer System Map

BMP Description:
A map that shows the location of appropriate storm sewer system components and receiving discharge bodies can facilitate management of illicit discharge detection and elimination. The City of Medina is currently in the process of completing a storm sewer system map. A map will be produced in CAD drafting format and will be updated as needed annually. The City will continue to update the system map and components listed below.

Measurable Goals:

- Percentage of storm sewer system map completed at the end of each annual reporting year

Timeline / Implementation Schedule:

- 2006 – Sequester all existing maps and plans
- 2007 – Synthesize existing maps and plans
- 2007 – Identify and add new information
- 2007-2008 – Verify accuracy and complete MS4 map including all natural water features
- June 30th, 2008– Completed MS4 map
- 2009-2011 – Annually review and update as needed

Specific Components & Notes (optional):

- Ponds, streams, lakes, and wetlands
- All pipes 24 inches in diameter and over that are part of the MS4
- All outfalls and other discharge points leaving the MS4
- Structural pollution control devices

Responsible Person	Responsible Department
Name: Chad Adams	**Title:** Public Works Superintendent
Title: City Administrator	**Dept. Head:** Steve Scherer
Phone: 763-473-4643	**Phone:** 763-473-4643
E-mail: Chad.Adams@ci.medina.mn.us	**E-mail:** Steve.Scherer@ci.medina.mn.us

Educational components related to this BMP (description or number – optional):
Creating a public complaint hotline for any issues related to storm sewer system and other conveyance structures.

BMP Page

MS4 Name: City of Medina

Unique Identifying Number: 3-2

Minimum Control Measures Addressed by This BMP

	Public education & outreach		Construction site runoff controls
	Public participation & involvement		Post-construction stormwater management
X	Illicit discharge detection & elimination		Pollution prevention/Good housekeeping

BMP Title:
Illicit Discharge, Detection, and Enforcement Ordinance

BMP Description:
The City of Medina will develop an ordinance to prohibit non-stormwater discharge into the storm sewer system.

Measurable Goals:

- Completed review of other regulating bodies ordinances
- Complete draft ordinance
- Completed ordinance

Timeline / Implementation Schedule:

- 2006 – Review other communities and regulatory bodies existing illicit discharge ordinances
- 2007 – Compile all current city ordinances related to illicit discharge and analyze gaps
- 2007-2008 – Produce draft of illicit discharge, detection, and elimination ordinance
- June 30th, 2008 – Completed illicit discharge, detection, and elimination ordinance
- 2009-2011 – Annually review and update as needed

Specific Components & Notes (optional):

- Meetings with City Attorney
- Septic system control
- Illicit connections control
- Illegal dumping control
- Recreational sewage control
- Right of Entry provision

Responsible Person	Responsible Department
Name: Chad Adams	**Title:** Public Works Superintendent
Title: City Administrator	**Dept. Head:** Steve Scherer
Phone: 763-473-4643	**Phone:** 763-473-4643
E-mail: Chad.Adams@ci.medina.mn.us	**E-mail:** Steve.Scherer@ci.medina.mn.us

Educational components related to this BMP (description or number – optional):
Cooperative effort with outside entities on public education on illegal dumping issues and relationships to city owned waters.

BMP Page

MS4 Name: City of Medina

Unique Identifying Number: 3-3

Minimum Control Measures Addressed by This BMP

	Public education & outreach		Construction site runoff controls
	Public participation & involvement		Post-construction stormwater management
X	Illicit discharge detection & elimination		Pollution prevention/Good housekeeping

BMP Title:
Illicit Discharge and Detection Program

BMP Description:
Program to detect and eliminate illegal and/or improper connections to storm drainage systems and receiving waters. Specific illicit discharge connections will be identified in years 2003, 2004, and 2005 using the specific component listed below. After detection of illicit discharge locations, the City of Medina will evaluate proper enforcement procedures and enforce the provisions of the City ordinance pertaining to illegal discharges into the storm sewer system.

Measurable Goals:
- Complete list of existing information on illicit connection tests performed to date within the City.
- Complete prioritized illicit connection assessment sites
- Length of storm sewer inspected
- Number of enforcement procedures

Timeline / Implementation Schedule:
- 2006 – Gather existing information on illicit connection tests performed to date within the City.
- 2007-2008 – Identify and prioritize future illicit connection assessment sites
- 2006-2011 – Begin conducting field tests of existing storm sewer system lines
- 2009-2011 – Implement program and annually review and update as needed

Specific Components & Notes (optional):
- Program to detect and address failing septic systems
- Program to detect and address illicit connections
- Community hotline and documentation procedures
- Inform public employees of non-storm water discharge hazards
- Inform general public of non-storm water discharge hazards

Responsible Person	Responsible Department
Name: Chad Adams	**Title:** Public Works Superintendent
Title: City Administrator	**Dept. Head:** Steve Scherer
Phone: 763-473-4643	**Phone:** 763-473-4643
E-mail: Chad.Adams@ci.medina.mn.us	**E-mail:** Steve.Scherer@ci.medina.mn.us

Educational components related to this BMP (description or number – optional):
- Community hotline and documentation procedures
- Inform public employees of non-storm water discharge hazards
- Inform general public of non-storm water discharge hazards

BMP Page

MS4 Name: City of Medina

Unique Identifying Number: 3-4

Minimum Control Measures Addressed by This BMP

	Public education & outreach		Construction site runoff controls
	Public participation & involvement		Post-construction stormwater management
X	Illicit discharge detection & elimination		Pollution prevention/Good housekeeping

BMP Title:
Employee and General Public Illicit Discharge Education Program

BMP Description:
Program to inform the public employees, businesses and the general public of water quality hazards associated with illegal discharges and improper disposal of waste.

Measurable Goals:
- Created education program
- Created outreach materials

Timeline / Implementation Schedule:
- 2006 – Identify outreach methods
- 2007 – Develop outreach materials
- 2008 – Implement in-person/volunteer outreach
- 2009-2011 – Annually review and update as needed

Specific Components & Notes (optional):
- Devote time at regular staff meetings to discuss storm water issues and concerns
- Recycling services informational billing
- Coordinate with Public Education and Outreach minimum control measures
- Coordinate with Public Participation and Involvement minimum control measures
- Coordinate with Good Housekeeping minimum control measures
- Community hotline and documentation procedures

Responsible Person	Responsible Department
Name: Chad Adams	**Title:** Public Works Superintendent
Title: City Administrator	**Dept. Head:** Steve Scherer
Phone: 763-473-4643	**Phone:** 763-473-4643
E-mail: Chad.Adams@ci.medina.mn.us	**E-mail:** Steve.Scherer@ci.medina.mn.us

Educational components related to this BMP (description or number – optional):
- Informational paycheck stuffers
- Informational utility bill stuffers
- Coordinate with Public Outreach minimum control measures
- Coordinate with Good Housekeeping minimum control measures
- Community hotline and documentation procedures

BMP Page

MS4 Name: City of Medina

Unique Identifying Number: 4-1

Minimum Control Measures Addressed by This BMP

	Public education & outreach	X	Construction site runoff controls
	Public participation & involvement		Post-construction stormwater management
	Illicit discharge detection & elimination		Pollution prevention/Good housekeeping

BMP Title:
Construction Site Storm Water Runoff Ordinance

BMP Description:
Medina will analyze their current ordinance, as it would pertain to erosion and sediment control and construction site management. They will analyze their time schedules for plan review; take a concentrated look at inspection and enforcement, and what selection of structural BMP's they have in place for recommendation.

Measurable Goals:
- Adopt ordinance
- Ordinance updates

Timeline / Implementation Schedule:
- 2006 – Adopt construction site stormwater runoff Ordinance
- 2007 – Review ordinance to determine effectiveness
- 2008 – Revise ordinance
- 2009-2011 – Annually review and update as needed

Specific Components & Notes (optional):
- Current city ordinance review
- Ordinance connection to MPCA minimum standards
- Ordinance comparison to similar communities
- Ordinance comparison to surrounding communities
- Ordinance descriptor tools for public/trade professionals
- Ordinance connection with county authority
- Ordinance link with other governing authorities
- Ordinance language for time lines relating to site plan review

Responsible Person	Responsible Department
Name: Chad Adams	**Title:** Public Works Superintendent
Title: City Administrator	**Dept. Head:** Steve Scherer
Phone: 763-473-4643	**Phone:** 763-473-4643
E-mail: Chad.Adams@ci.medina.mn.us	**E-mail:** Steve.Scherer@ci.medina.mn.us

Educational components related to this BMP (description or number – optional):
Develop Handout Piece describing a minimum of 6 Construction Site BMP's
Continuous education by planning and zoning authorities under permit and site plan review requirements through city permit process

BMP Page

MS4 Name: City of Medina

Unique Identifying Number: 4-2

Minimum Control Measures Addressed by This BMP

	Public education & outreach	X	Construction site runoff controls
	Public participation & involvement		Post-construction stormwater management
	Illicit discharge detection & elimination		Pollution prevention/Good housekeeping

BMP Title:
Erosion and Sediment Control Best Management Practices (BMPs)

BMP Description:
The City of Medina has developed, implemented and communicated 6 appropriate erosion and sediment control BMPs for construction site runoff.

Measurable Goals:
- Completed list of 6 acceptable BMPs
- Updates to BMP List

Timeline / Implementation Schedule:
- 2006 - Completion of 6 accepted erosion and sediment control BMPs for ordinance and review
- 2007 – Update BMP list per ESC Ordinance
- 2008-2011 Annually review and update as needed

Specific Components & Notes (optional):
- 6 accepted BMP requirements
- Connection of BMPs to MPCA manual
- Construction Site Storm Water Runoff Ordinance
- Development and Redevelopment Review Program
- Develop Handout Piece describing a minimum of 6 Construction Site BMP's

Responsible Person	Responsible Department
Name: Chad Adams	**Title:** Public Works Superintendent
Title: City Administrator	**Dept. Head:** Steve Scherer
Phone: 763-473-4643	**Phone:** 763-473-4643
E-mail: Chad.Adams@ci.medina.mn.us	**E-mail:** Steve.Scherer@ci.medina.mn.us

Educational components related to this BMP (description or number – optional):
- Develop Handout Piece describing a minimum of 6 Construction Site BMP's
- Continuous education to contractor industry on minimum inspection requirements

BMP Page

MS4 Name: City of Medina

Unique Identifying Number: 4-3

Minimum Control Measures Addressed by This BMP

	Public education & outreach	X	Construction site runoff controls
	Public participation & involvement		Post-construction stormwater management
	Illicit discharge detection & elimination		Pollution prevention/Good housekeeping

BMP Title:
Construction Site Waste Control Issues

BMP Description:
Medina completed site review standards, as it pertains to construction site waste control issues. They will annually evaluate and update how they inspect for appropriate construction site waste control management.

Measurable Goals:
- Develop responsible construction site management guidelines/principles
- Develop accountability standards for professionals in construction site management within the community

Timeline / Implementation Schedule:
- 2006 – Completed list of responsible construction site management guidelines
- 2007-2011 – Annually review and update as needed.

Specific Components & Notes (optional):
- Construction Site entrance criteria, site debris storage, and waste disposal definitions
- Construction Site limits definition
- Escrow funds for developers to adhere to standards of compliance
- Ramifications for non-compliance
- Provide training to community regarding standards

Responsible Person	Responsible Department
Name: Chad Adams	**Title:** Public Works Superintendent
Title: City Administrator	**Dept. Head:** Steve Scherer
Phone: 763-473-4643	**Phone:** 763-473-4643
E-mail: Chad.Adams@medina.mn.us	**E-mail:** Steve.Scherer@ci.medina.mn.us

Educational components related to this BMP (description or number – optional):
- Develop Handout Piece describing a minimum of 6 Construction Site BMP's

BMP Page

MS4 Name: City of Medina

Unique Identifying Number: 4-4

Minimum Control Measures Addressed by This BMP

	Public education & outreach	X	Construction site runoff controls
	Public participation & involvement		Post-construction stormwater management
	Illicit discharge detection & elimination		Pollution prevention/Good housekeeping

BMP Title:
Construction Site Plan Review Process

BMP Description:
The City of Medina will maintain procedures for construction site sediment and erosion control within the Development and Redevelopment Plan Review Program to incorporate mandatory provisions written in the Construction Site Storm Water Runoff Ordinance.

Measurable Goals:	Timeline / Implementation Schedule:
• Number of site plan reviews performed	• 2006 – Completion of plan review documentation procedures • 2007-2011 – Annually review and update as needed

Specific Components & Notes (optional):

- Define communication link between planning, engineering, and zoning, other non profit's
- Timeline for a site plan review process determined to currently be 30 days
- Site plan review fees and City permit application
- Construction Site Storm Water Runoff Ordinance
- Development and Redevelopment Review Program
- Cooperate with 3 watershed districts on site inspection and site plan review process (joint authority issues)

Responsible Person	Responsible Department
Name: Chad Adams	**Title:** Public Works Superintendent
Title: City Administrator	**Dept. Head:** Steve Scherer
Phone: 763-473-4643	**Phone:** 763-473-4643
E-mail: Chad.Adams@ci.medina.mn.us	**E-mail:** Steve.Scherer@ci.medina.mn.us

Educational components related to this BMP (description or number – optional):
Continuous education of developers, homeowners, and contractors will occur through the requirements of ESC practices during the site plan review process

BMP Page

MS4 Name: City of Medina

Unique Identifying Number: 4-5

Minimum Control Measures Addressed by This BMP

	Public education & outreach	X	Construction site runoff controls
	Public participation & involvement		Post-construction stormwater management
	Illicit discharge detection & elimination		Pollution prevention/Good housekeeping

BMP Title:
Construction Site Complaint Procedure

BMP Description:
The city of Medina will maintain a record of public complaints for non-compliance issues related to storm water. The City will establish a procedure where people can submit complaints through their main phone line, which will be provided in the City website. The city will annually review their record keeping and how they store information regarding site inspection issues.

Measurable Goals:
- Number of calls from the community regarding storm water issues
- Number of city staff actions initiated based on calls received

Timeline / Implementation Schedule:
- 2006 – Documentation procedure will be complete
- 2007-2011 – Annually review and update as needed

Specific Components & Notes (optional):
- Allow citizen reports on illicit discharge detection
- Allow citizen reports on construction site erosion violations
- City complaint receipt program

Responsible Person	Responsible Department
Name: Chad Adams	**Title:** Public Works Superintendent
Title: City Administrator	**Dept. Head:** Steve Scherer
Phone: 763-473-4643	**Phone:** 763-473-4643
E-mail: Chad.Adams@ci.medina.mn.us	**E-mail:** Steve.Scherer@ci.medina.mn.us

Educational components related to this BMP (description or number – optional):

BMP Page

MS4 Name: City of Medina

Unique Identifying Number: 4-6

Minimum Control Measures Addressed by This BMP

	Public education & outreach	X	Construction site runoff controls
	Public participation & involvement		Post-construction stormwater management
	Illicit discharge detection & elimination		Pollution prevention/Good housekeeping

BMP Title:
Construction Site Inspection and Enforcement Program

BMP Description:
Medina will conduct inspection of construction sites and conduct enforcement methods as necessary. Medina will review how they inspect for appropriate construction site conditions and the effectiveness of the enforcement process.

Measurable Goals:

- Analysis of site inspection criteria of what to look for, critical areas of concern definitions, and appropriate BMP installation guide
- Documentation of number of inspections and enforceable action letters

Timeline / Implementation Schedule:

- 2006 - Analysis and refinement of current site inspection an enforcement methods
- 2007 – Develop log to track inspections and enforcement activity
- 2007 – Refine inspection procedures per Stormwater Construction Site Storm Water Runoff Control Ordinance
- 2007-2011 – Annually review and update as needed

Specific Components & Notes (optional):

- Develop site inspection criteria
- Clearly define enforcement actions
- Develop log to track inspections and enforcement activity
- Develop certification criteria for anyone working on projects within the city
- Develop and enforce a stop work order for construction sites that are not in compliance with city standards

Responsible Person	Responsible Department
Name: Chad Adams	**Title:** Public Works Superintendent
Title: City Administrator	**Dept. Head:** Steve Scherer
Phone: 763-473-4643	**Phone:** 763-473-4643
E-mail: Chad.Adams@ci.medina.mn.us	**E-mail:** Steve.Scherer@ci.medina.mn.us

Educational components related to this BMP (description or number – optional):
Continuous education of developers, homeowners, and contractors will occur through the requirements of ESC practices during the site inspection and enforcement process

BMP Page

MS4 Name: City of Medina

Unique Identifying Number: 4-7

Minimum Control Measures Addressed by This BMP

	Public education & outreach	X	Construction site runoff controls
	Public participation & involvement		Post-construction stormwater management
	Illicit discharge detection & elimination		Pollution prevention/Good housekeeping

BMP Title:
Construction Site Enforcement Procedures

BMP Description:
This is the most critical step in implementing an effective Construction Site Runoff Control Program. This is where a community will assess how well they are assuring compliance of their ordinance. This is where they understand how well their current system is working and how they can improve the system. This is also where a city needs to carefully consider the continuity of the inspection process and how to prevent "perceived" bias. This is also where the city will implement the techniques for fines and other financial incentives to ensure compliance to predetermined standards of performance during construction.

Measurable Goals:
- Number of inspection logs, enforceable action letters, database material, and funds collected for actions taken.

Timeline / Implementation Schedule:
- 2006-2011 - This is a current city program. Annually review and update as needed.

Specific Components & Notes (optional):
- Letters of Credit in developers agreements
- Financial escrow accounts
- Other fiscal determinates for non-compliance
- Permit fees

Responsible Person	Responsible Department
Name: Chad Adams	**Title:** Public Works Superintendent
Title: City Administrator	**Dept. Head:** Steve Scherer
Phone: 763-473-4643	**Phone:** 763-473-4643
E-mail: Chad.Adams@ci.medina.mn.us	**E-mail:** Steve.Scherer@ci.medina.mn.us

Educational components related to this BMP (description or number – optional):
Continuous education of developers, homeowners, and contractors will occur through the requirements of ESC practices during the site inspection and enforcement process.

BMP Page

MS4 Name: City of Medina

Unique Identifying Number: 5-1

Minimum Control Measures Addressed by This BMP

	Public education & outreach		Construction site runoff controls
	Public participation & involvement	X	Post-construction stormwater management
	Illicit discharge detection & elimination		Pollution prevention/Good housekeeping

BMP Title:
Ordinance or Other Regulatory Mechanism to Address Post-construction Runoff From New Development and Redevelopment Projects to the Extent Allowable Under Law.

BMP Description:
The City will adopt a new ordinance that requires a 20% reduction in current phosphorus loads as a result of Best Management Practices installed on future development and redevelopment projects. Following this criterion alone, rural residential may reduce current loading by virtue of the land use change and under no circumstances shall overall water quality treatment fall below the requirements of the NPDES Construction Site Permit for discharges to an impaired water body.

Measurable Goals:

- Compare/contrast the current city ordinance with the Model Storm water Ordinance provided by the Minnesota Pollution Control Agency and Metropolitan Council Model Storm water Ordinance
- Analyze current ordinance standards after a 36 month time frame to completely understand city initiatives with regard to storm water management

Timeline / Implementation Schedule:

- 2006-2007 – contrast with agency guidelines for model storm water ordinances
- 2007-2008 – make appropriate changes to current ordinance structures
- 2008 – Finalize the storm water management ordinance into Medina City Code
- 2008-2011 Annually review and update as needed

Continued…

Specific Components & Notes (optional):

Current Ordinance Listing for Post Construction Storm water Management:

- 820 Subdivision Regulations
- 825.55 Zoning-Administration: Site Plan Review
- 828.29 Construction Site Stormwater Runoff Control Ordinance

Responsible Person	Responsible Department
Name: Chad Adams	**Title:** Public Works Superintendent
Title: City Administrator	**Dept. Head:** Steve Scherer
Phone: 763-473-4643	**Phone:** 763-473-4643
E-mail: Chad.Adams@ci.medina.mn.us	**E-mail:** Steve.Scherer@ci.medina.mn.us

Educational components related to this BMP (description or number – optional):

BMP Page

MS4 Name: City of Medina

Unique Identifying Number: 5-2

Minimum Control Measures Addressed by This BMP

	Public education & outreach		Construction site runoff controls
	Public participation & involvement	X	Post-construction stormwater management
	Illicit discharge detection & elimination		Pollution prevention/Good housekeeping

BMP Title:
Develop and Implement Strategies, Which Include a Combination of Structural and/or Nonstructural Best Management Practices (BMP's) Appropriate for the City of Medina

BMP Description:
The selection and program of BMP's that the City of Medina utilizes will set controls in place that prevent or minimize water quality impacts.

Measurable Goals:

- Compare/contrast the current city standards that are being utilized with innovative storm water management standards
- Analyze limits set on impervious surfaces and new development or re/development standards for impervious surfaces

Timeline / Implementation Schedule:

- 2006 – contrast with agency guidelines for model storm water best management practices
- 2007 – Analyze number of types of BMP's utilized to control storm water within city limits
- 2008 – Finalize the storm water management standards for the City of Medina
- 2009-2011 Annually review and update as needed

Continued…

Specific Components & Notes (optional):

Current BMP listing for post construction storm water management

- Wet Detention Ponds
- Storm Water Wetlands
- Rain Water Gardens
- Infiltration Basins
- Grassed Swales and Channels
- Vegetative Cover
- Sump Catch Basins
- Filter Strips
- Buffer Strips
- Channel Riprap
- Paved Flumes
- Catch Basin Inserts
- Vegetation Protection

Responsible Person	Responsible Department
Name: Chad Adams	**Title:** Public Works Superintendent
Title: City Administrator	**Dept. Head:** Steve Scherer
Phone: 763-473-4643	**Phone:** 763-473-4643
E-mail: Chad.Adams@ci.medina.mn.us	**E-mail:** Steve.Scherer@ci.medina.mn.us

Educational components related to this BMP (description or number – optional):

An educational handout will be produced over the next two years to be distributed to homeowners who are interested in innovative post construction storm water techniques and BMP's.

BMP Page

MS4 Name: City of Medina

Unique Identifying Number: 5-3

Minimum Control Measures Addressed by This BMP

	Public education & outreach		Construction site runoff controls
	Public participation & involvement	X	Post-construction stormwater management
	Illicit discharge detection & elimination		Pollution prevention/Good housekeeping

BMP Title:
Develop and Ensure Long-term Operation and Maintenance of BMP's Installed as a Requirement of the City of Medina Ordinance Dictating Post-Construction Storm Water Management Practices. The maintenance requirements for permanent stormwater management are managed through developer's agreements that are approved during the plan review process. The developer's agreement will specify who is responsible for completing the maintenance and when the maintenance should be conducted.

BMP Description:
This is a program that ensures the practices that are installed to manage and treat post construction storm water are managed, maintained, and operated in an effective manner.

Measurable Goals:

- Total the number of developers agreements that address the long term maintenance of post construction storm water facilities after each year of this permit cycle
- Total number of BMPs inspected at the end of each year
- Total number of maintenance agreements renewed or written at the end of each year

Timeline / Implementation Schedule:

- 2006 – Quantify and document all municipal owned post construction storm water BMP's (ponds etc.)
- 2006 – Develop standard developers agreement language to handle transfer of ownership issue with regard to BMP's as well as long term maintenance objectives
- 2006 –Consider long term maintenance objectives and interface with city comprehensive plan for storm water management
- 2006-2011 –Document annual inspection of all municipal owned post construction BMP's
- 2007-2011 – Annually review and update as needed

Specific Components & Notes (optional):

Responsible Person	**Responsible Department**
Name: Chad Adams	**Title:** Public Works Superintendent
Title: City Administrator	**Dept. Head:** Steve Scherer
Phone: 763-473-4643	**Phone:** 763-473-4643
E-mail: Chad.Adams@ci.medina.mn.us	**E-mail:** Steve.Scherer@ci.medina.mn.us

BMP Page

MS4 Name: City of Medina

Unique Identifying Number: 5-4

Minimum Control Measures Addressed by This BMP

	Public education & outreach		Construction site runoff controls
	Public participation & involvement	X	Post-construction stormwater management
	Illicit discharge detection & elimination		Pollution prevention/Good housekeeping

BMP Title:
Develop and Ensure a Site Plan Review Process as a Requirement of the City of Medina Ordinance Dictating Post Construction Storm Water Management Practices.

BMP Description:
This is a program that ensures that the review of plans for both new development and re-development provides a gateway through which better storm water management and required best management practices can be implemented. It also ensures the designed practices are functioning to the appropriate level for storm water control.

Measurable Goals:

- Quantify the number of site plans reviewed by the City of Medina for each year of the permit cycle.
- Quantify the number of site plans reviewed internally by the City of Medina staff.
- Develop a standard site plan review checklist for storm water standards.

Timeline / Implementation Schedule:

- 2006 – Consider outsourced site plan review for storm water concerns for all commercial and residential development greater than one acre.
- 2007 –Provide criteria for internal municipal site plan review for any land disturbance less than one acre.
- 2007-2008 –Interface site plan review process with city's long term storm water management goals.
- 2008-2011 Annually review and update as needed

Continued…

Specific Components & Notes (optional):

- The current outsourced site plan review process currently encompasses the following BMP standards for review.
    - Pitt method for treatment sizing
    - Walker method for treatment sizing
    - Bench area definition for maintenance and safety concerns
    - Wetland vegetation preservation
    - Buffer strips and infiltration strips
    - Extended detention for the 2, 10, and 100 year rain events as appropriate
    - Pond outlet structures
    - Emergency spillways
    - Anti seep diaphragms
    - Draw down devices
    - Assure review with appropriate Agencies for threatened or endangered species and historic places and archeological sites
    - Assure review with appropriate Agencies for environmental review required by state or federal laws.

Responsible Person	Responsible Department
Name: Chad Adams	**Title:** Public Works Superintendent
Title: City Administrator	**Dept. Head:** Steve Scherer
Phone: 763-473-4643	**Phone:** 763-473-4643
E-mail: Chad.Adams@ci.medina.mn.us	**E-mail:** Steve.Scherer@ci.medina.mn.us

Educational components related to this BMP (description or number – optional):

Continuous education will occur in the development and construction communities when these devices are required as a component of the post construction storm water site plan review process.

BMP Page

MS4 Name: City of Medina

Unique Identifying Number: 6-1

Minimum Control Measures Addressed by This BMP

	Public education & outreach		Construction site runoff controls
	Public participation & involvement		Post-construction stormwater management
	Illicit discharge detection & elimination	X	Pollution prevention/Good housekeeping

BMP Title:
Floor Drain Containment Program in Public Works Facilities

BMP Description:
All public works and city facilities contain floor drains that lead to containment basins which are pumped on a contracted, regular basis. These containment basins ensure that no leakage to outside storm water would be possible. This contracted service provides the city with documentation of removal of wastewater materials.

Measurable Goals:
- Number of times floor drains are pumped annually
- Visual monitoring of quantity of wastewater and potential contaminants collected between pumping

Timeline / Implementation Schedule:
- 2006-2011 This is a current practice in place for the City of Medina. Annually review and update as needed.

Specific Components & Notes (optional):
- Contains any vehicle maintenance materials that might drip during storage and maintenance.
- Contains any vehicle wash materials collected during vehicle washing.
- Contains any spills in public works areas during regular maintenance procedures.
- Contains any contaminated wastewater that might lead to impervious runoff if washed out side a covered building.

Responsible Person	Responsible Department
Name: Chad Adams	**Title:** Public Works
Title: City Administrator	**Dept. Head:** Steve Scherer
Phone: 763-473-4643	**Phone:** 763-473-4643
E-mail: Chad.Adams@ci.medina.mn.us	**E-mail:** Steve.Scherer@ci.medina.mn.us

Educational components related to this BMP (description or number – optional):
All city staff and public works employees are trained on the issue of drain containment upon hire.

BMP Page

MS4 Name: City of Medina

Unique Identifying Number: 6-2

Minimum Control Measures Addressed by This BMP

	Public education & outreach		Construction site runoff controls
	Public participation & involvement		Post-construction stormwater management
	Illicit discharge detection & elimination	X	Pollution prevention/Good housekeeping

BMP Title:
Hazardous Materials Storage Program

BMP Description:
Proper handling of hazardous waste can prevent spills or leakage. Proper disposal of hazardous waste can protect water resources.

Measurable Goals:

- Number of regularly inspected storage units
- Percent of appropriate work force trained in hazardous material storage and maintenance
- Number of storage facilities equipped to store hazardous waste
- Establishment of containment protocols

Timeline / Implementation Schedule:

- 2006 – Develop and implement a log to track hazardous materials recycling program, and number of times recycling occurs throughout the year
- 2006-2007 – Develop and document city hazardous materials handling and storage policy
- 2006-2007 – Develop database of employees trained in city hazardous materials handling and storage policy
- 2008-2011 – Annually review and update as needed

Specific Components & Notes (optional):

- Log for recycled hazardous materials
- Annual contract documented for hazardous materials removal and disposal
- Paid invoices for above services

Responsible Person	Responsible Department
Name: Chad Adams	**Title:** Public Works
Title: City Administrator	**Dept. Head:** Steve Scherer
Phone: 763-473-4643	**Phone:** 763-473-4643
E-mail: Chad.Adams@ci.medina.mn.us	**E-mail:** Steve.Scherer@ci.medina.mn.us

Educational components related to this BMP (description or number – optional):

- On site training for any new staff on appropriate hazardous materials handling and storage procedures for the City of Medina

BMP Page

MS4 Name: City of Medina

Unique Identifying Number: 6-3

Minimum Control Measures Addressed by This BMP

	Public education & outreach		Construction site runoff controls
	Public participation & involvement		Post-construction stormwater management
	Illicit discharge detection & elimination	X	Pollution prevention/Good housekeeping

BMP Title:
Landscaping and Lawn Care Practices

BMP Description:
Proper maintenance of park space, landscaped medians or other municipal landscaped areas can protect water quality.

Measurable Goals:

- Amount of fertilizer used (as mass and/or mass applied per unit area)
- Amount of pesticides applied (as mass and/or mass applied per unit area)
- Amount of herbicides applied (as mass and/or mass applied per unit area)
- Whether or not phosphorous free fertilizer is being used
- Whether or not vegetative buffers are installed around high-chemical use areas

Timeline / Implementation Schedule:

- 2006-2011 This is a current city program. Annually review and update as needed

Specific Components & Notes (optional):

- City currently requires staff to be trained on pesticide, herbicide, and fertilizer applications being done on city properties
- City contracts only with licensed applicators to apply above materials on any other city properties not being cared for by city staff
- Materials stored indoors in a proper fashion
- Materials applied only when necessary, over-applications are closely monitored and their connections to water quality issues

Responsible Person	Responsible Department
Name: Chad Adams	**Title:** Public Works
Title: City Administrator	**Dept. Head:** Steve Scherer
Phone: 763-473-4643	**Phone:** 763-473-4643
E-mail: Chad.Adams@ci.medina.mn.us	**E-mail:** Steve.Scherer@ci.medina.mn.us

Educational components related to this BMP (description or number – optional):

BMP Page

MS4 Name: City of Medina

Unique Identifying Number: 6-4

Minimum Control Measures Addressed by This BMP

	Public education & outreach		Construction site runoff controls
	Public participation & involvement		Post-construction stormwater management
X	Illicit discharge detection & elimination	X	Pollution prevention/Good housekeeping

BMP Title:
Spill Response Plan

BMP Description:
A spill response plan defines the potential types of materials and/or compounds spilled, how fast the spill may spread, where the spill may travel, the potential impact of the spill on the downstream resources. The spill response plan also addresses what steps a municipality will take if a spill should occur.

Measurable Goals:

- Whether or not an inventory of municipal facilities at risk for spills was created
- Number of preventative maintenance procedures performed on tanks, valves, pumps, pipes, and other equipment
- Whether or not a spill response plan was developed for municipal facilities
- Number of personnel trained in spill response
- Number of regularly inspected high-risk facilities

Timeline / Implementation Schedule:

- 2006 – Develop a list of known spills that have occurred in the MS4 and the actions taken
- 2007 – Strategize on potential spill and response scenarios
- 2007 – Develop preliminary spill response plan
- 2007 – Coordinate with outside agencies; afford public review of preliminary plan
- 2008 – Integrate spill response plan with MS4 map and city's water resources
- 2008-2011 – Annually review and update as needed

Specific Components & Notes (optional):

- Coordinate with National Incident Management Training and Lake Area Management Preparedness Group

Responsible Person	Responsible Department
Name: Chad Adams	**Title:** Public Works
Title: City Administrator	**Dept. Head:** Steve Scherer
Phone: 763-473-4643	**Phone:** 763-473-4643
E-mail: Chad.Adams@ci.medina.mn.us	**E-mail:** Steve.Scherer@ci.medina.mn.us

Educational components related to this BMP (description or number – optional):
City staff will be required to take annual training on City of Medina spill response program, conducted internally.

BMP Page

MS4 Name: City of Medina

Unique Identifying Number: 6-5

Minimum Control Measures Addressed by This BMP

	Public education & outreach		Construction site runoff controls
	Public participation & involvement		Post-construction stormwater management
	Illicit discharge detection & elimination	X	Pollution prevention/Good housekeeping

BMP Title:
City Owned Equipment Maintenance Program

BMP Description:
Protecting against spills and leaks into an MS4 can protect water quality. Proper clean up techniques are also important

Measurable Goals:

- Number of drip pans or boards used
- Number of spills reported
- Percentage of vehicles inspected for leaks
- Number of clean-up stations established at municipal facilities
- Amount of spill clean-up materials used

Timeline / Implementation Schedule:

- 2006 – Develop log for all city owned equipment and maintenance to that equipment
- 2006 - 2011 – Track all maintenance activities in city log for city owned equipment
- 2007- 2011 – Annually review and update as needed

Specific Components & Notes (optional):

Responsible Person	Responsible Department
Name: Chad Adams	**Title:** Public Works
Title: City Administrator	**Dept. Head:** Steve Scherer
Phone: 763-473-4643	**Phone:** 763-473-4643
E-mail: Chad.Adams@ci.medina.mn.us	**E-mail:** Steve.Scherer@ci.medina.mn.us

Educational components related to this BMP (description or number – optional):
All city staff responsible for operating city owned equipment will be trained on city equipment maintenance requirements, and tracking procedures. (Internal Training)

BMP Page

MS4 Name: City of Medina

Unique Identifying Number: 6-6

Minimum Control Measures Addressed by This BMP

	Public education & outreach		Construction site runoff controls
	Public participation & involvement		Post-construction stormwater management
X	Illicit discharge detection & elimination	X	Pollution prevention/Good housekeeping

BMP Title:
Sanitary Sewer Maintenance and Inspection Program

BMP Description:
Cleaning of the sanitary sewer system is typically focused on conveyance structures and areas of containment. Consideration may be given to coordinating cleaning activities with inspection activities for city storm sewer systems.

Measurable Goals:

- Whether or not areas with high pollutant loading were inventoried and prioritized for cleaning
- Whether or not a capital investment is made to purchase a cleaning device
- The length of sanitary sewer cleaned annually
- The amount of debris removed during cleaning
- The number of repairs resulting from annual cleaning and inspection
- The number of times the automatic alarm systems respond to debris, or other potential contaminants to storm sewer system.

Timeline / Implementation Schedule:

- 2006-2011 This is a current city program. Annually review and update as needed

Continued….

Specific Components & Notes (optional):	
Responsible Person	**Responsible Department**
Name: Chad Adams	**Title:** Public Works
Title: City Administrator	**Dept. Head:** Steve Scherer
Phone: 763-473-4643	**Phone:** 763-473-4643
E-mail: Chad.Adams@ci.medina.mn.us	**E-mail:** Steve.Scherer@ci.medina.mn.us
Educational components related to this BMP (description or number – optional): All public works employees are trained in the value of a functioning sanitary sewer system, and also trained on regular inspection of this system.	

BMP Page

MS4 Name: City of Medina

Unique Identifying Number: 6-7

Minimum Control Measures Addressed by This BMP

	Public education & outreach		Construction site runoff controls
	Public participation & involvement		Post-construction stormwater management
	Illicit discharge detection & elimination	X	Pollution prevention/Good housekeeping

BMP Title:
Municipal Street Maintenance Program

BMP Description:
This program addresses the city's initiative to keep street debris out of their storm sewer system. The City currently Sweeps the City streets on an annual basis, however in the Lake Independence neighborhood the City will sweep three times/year. This work is currently contracted out and is required to be completed using a pick-up style sweeper.

Measurable Goals:
- Number of times City streets were swept on an annual basis
- Employee training on sweeping issues
- Requirement for construction sites to control off site tracking
- Number of times the Lake Independence neighborhood was swept on an annual basis.

Timeline / Implementation Schedule:
- 2006-2011 - This is a current city program. Annually review and update as needed
- 2009-2011 - Sweep the Lake Independence neighborhood three times/year

Specific Components & Notes (optional):
- City owned equipment and outsourced service for maximum impact to city MS4 quality
- Re-use of sand collected in city compost piles
- Immediate response whenever possible to city sweeping of trouble areas

Responsible Person	Responsible Department
Name: Chad Adams	**Title:** Public Works
Title: City Administrator	**Dept. Head:** Steve Scherer
Phone: 763-473-4643	**Phone:** 763-473-4643
E-mail: Chad.Adams@ci.medina.mn.us	**E-mail:** Steve.Scherer@ci.medina.mn.us

Educational components related to this BMP (description or number – optional):

BMP Page

MS4 Name: City of Medina

Unique Identifying Number: 6-8

Minimum Control Measures Addressed by This BMP

	Public education & outreach		Construction site runoff controls
	Public participation & involvement		Post-construction stormwater management
	Illicit discharge detection & elimination	X	Pollution prevention/Good housekeeping

BMP Title:
Structural MS4 Pollution Control Device Inspection and Maintenance Program

BMP Description:
All current MS4 structural pollution control devices are inspected annually, and maintained as appropriate. Rational, objective criteria that are developed to assess whether repairs, replacement or maintenance are needed can ensure action is taken if warranted, regardless of personnel. It can also show potential areas that may need attention for causing actions (i.e. high sedimentation, flooding, etc.). If devices are identified as needing repairs they will be put on a prioritization list and worked into the City budget, which is funded through the Storm Water Utility. For devices that are posing an immediate threat to public safety will be repaired immediately. A schedule of when devices will be repaired will be provided in the annual report.

Measurable Goals:
- Whether or not criteria are developed
- Number of each type of action recommended
- Number of each type of action performed
- Proportion of successfully operating structural pollution control devices

Timeline / Implementation Schedule:
- 2006-2011 This is a current city program. Annually review and update as needed.

Specific Components & Notes (optional):
All catch basins and trash racks are cleaned and repaired immediately upon discovery of any potential issue causing them to be non-functional.

Responsible Person	Responsible Department
Name: Chad Adams	**Title:** Public Works
Title: City Administrator	**Dept. Head:** Steve Scherer
Phone: 763-473-4643	**Phone:** 763-473-4643
E-mail: Chad.Adams@ci.medina.mn.us	**E-mail:** Steve.Scherer@ci.medina.mn.us

Educational components related to this BMP (description or number – optional):

BMP Page

MS4 Name: City of Medina

Unique Identifying Number: 6-9

Minimum Control Measures Addressed by This BMP

	Public education & outreach		Construction site runoff controls
	Public participation & involvement		Post-construction stormwater management
	Illicit discharge detection & elimination	X	Pollution prevention/Good housekeeping

BMP Title:
Street Deicing Program

BMP Description:
Proper application of road salt can minimize over-spreading. Use of alternative products can lessen the impact on water quality.

Measurable Goals:
- Whether alternative products are used
- Proportion of alternative products used
- Degree of accuracy met by calibration of outsourced equipment
- Whether or not a schedule is developed to inspect road salt applicator vehicles

Timeline / Implementation Schedule:
- 2006-2011 This is a current city program. Annually review and update as needed.

Specific Components & Notes (optional):
Outsourced use of road salt applications as appropriate. The critical piece of this process is that this outsourcing is carefully monitored

Responsible Person	Responsible Department
Name: Chad Adams	**Title:** Public Works
Title: City Administrator	**Dept. Head:** Steve Scherer
Phone: 763-473-4643	**Phone:** 763-473-4643
E-mail: Chad.Adams@ci.medina.mn.us	**E-mail:** Steve.Scherer@ci.medina.mn.us

Educational components related to this BMP (description or number – optional):

BMP Page

MS4 Name: City of Medina

Unique Identifying Number: 6-10

Minimum Control Measures Addressed by This BMP

	Public education & outreach	X	Construction site runoff controls
	Public participation & involvement		Post-construction stormwater management
	Illicit discharge detection & elimination	X	Pollution prevention/Good housekeeping

BMP Title:
ESC Standards During All Municipal Land Disturbance Projects

BMP Description:
The city is held to the appropriate erosion and sediment control standards that have been developed for any land disturbance activity occurring within the city jurisdiction. These standards ensure minimized impacts to all potential waters within the city limits of construction.

Measurable Goals:
- Number of city projects occurring within each construction year
- Total number of ESC inspections performed for city projects within each construction year

Timeline / Implementation Schedule:
- 2006 – Provide regular site inspections for any city project every 7 days or after each .25 inch rain event
- 2007 – Collect documentation for all ESC inspections for city projects during the construction season
- 2007-2011 – Analyze current ESC practices on all city owned projects, and make appropriate adjustments to required practices

Specific Components & Notes (optional):
- ESC ordinance
- ESC inspection services
- Site plan review process by city engineer for appropriate ESC practices

Responsible Person	Responsible Department
Name: Chad Adams	**Title:** Public Works
Title: City Administrator	**Dept. Head:** Steve Scherer
Phone: 763-473-4643	**Phone:** 763-473-4643
E-mail: Chad.Adams@ci.medina.mn.us	**E-mail:** Steve.Scherer@ci.medina.mn.us

Educational components related to this BMP (description or number – optional):
Case by case training for city personnel on appropriate ESC practices for all city owned projects through ESC site inspection and ESC site plan review.
Training of appropriate city staff for appropriate ESC inspection and installation procedures.

BMP Page

MS4 Name: City of Medina

Unique Identifying Number: 6-11

Minimum Control Measures Addressed by This BMP

	Public education & outreach		Construction site runoff controls
	Public participation & involvement		Post-construction stormwater management
	Illicit discharge detection & elimination	X	Pollution prevention/Good housekeeping

BMP Title:
Outfall and Pond Inspection Program for All City Owned MS4 systems

BMP Description:
Sediment basins and ponds require periodic maintenance in order to keep the performance optimized, depending on watershed and precipitation factors. Outfalls can collect debris and trash that should be removed when abundant. Failing or faulty outfalls can result in downstream erosion and periodic inspections can address this issue. The City will inspect all outfalls and ponds at a rate of 20% per year on a rotating basis such that 100% of outfalls are completed on a 5 year inspection cycle.

Measurable Goals:
- Inspect outfalls and ponds at minimum of 20% per year on a rotating basis such that 100% of outfalls are completed on a 5 year inspection cycle.

Timeline / Implementation Schedule:
- 2006-2007 – Gather and map all city owned ponds and outfalls with numeric representation for inspection procedures.
- 2006-2011 – Continue inspecting outfalls and ponds at minimum of 20% per year on a rotating basis such that 100% of outfalls and ponds are completed on a 5 year inspection cycle.
- 2007-2011 – Implement outfall and pond cleaning procedure for city staff.

Specific Components & Notes (optional):
- Record Keeping procedures and electronic database development

Responsible Person	Responsible Department
Name: Chad Adams	**Title:** Public Works
Title: City Administrator	**Dept. Head:** Steve Scherer
Phone: 763-473-4643	**Phone:** 763-473-4643
E-mail: Chad.Adams@ci.medina.mn.us	**E-mail:** Steve.Scherer@ci.medina.mn.us

Educational components related to this BMP (description or number – optional):
Training program for city staff for mapping details, documentation procedures for inspection and maintenance of ponds and outfalls.

BMP Page

MS4 Name: City of Medina

Unique Identifying Number: 6-12

Minimum Control Measures Addressed by This BMP

	Public education & outreach		Construction site runoff controls
	Public participation & involvement		Post-construction stormwater management
	Illicit discharge detection & elimination	X	Pollution prevention/Good housekeeping

BMP Title:
Storm Drain System Cleaning

BMP Description:
The city of Medina may contract with an outside entity to clean and maintain any necessary storm systems within the city's jurisdiction. This process will be done an as needed basis, or every three years whichever is more frequent. The city will adjust this schedule if pollutants should accumulate and more frequent maintenance is required.

Measurable Goals:

- Number of times the outside entity is contracted per year for maintenance issues related to the city storm sewer system
- Number of inspections the city will conduct each year to clean out their storm sewer system

Timeline / Implementation Schedule:

- 2006 – Analyze current storm sewer maintenance requirements and budget appropriate dollars
- 2007 – Make determination if trouble areas need maintenance more frequently
- 2007 – Conduct maintenance for city's storm sewer system through outsourced company
- 2007 - Analyze current storm sewer maintenance requirements and budget appropriate dollars
- 2008 - Analyze current storm sewer maintenance requirements and budget appropriate dollars
- 2008-2011- Annually review and update as needed

Continued…

Specific Components & Notes (optional):	
Responsible Person	**Responsible Department**
Name: Chad Adams	**Title:** Public Works
Title: City Administrator	**Dept. Head:** Steve Scherer
Phone: 763-473-4643	**Phone:** 763-473-4643
E-mail: Chad.Adams@ci.medina.mn.us	**E-mail:** Steve.Scherer@ci.medina.mn.us
Educational components related to this BMP (description or number – optional): Provide city public works staff with storm water system maintenance training	

BMP Page

MS4 Name: City of Medina

Unique Identifying Number: 6-13

Minimum Control Measures Addressed by This BMP

	Public education & outreach		Construction site runoff controls
	Public participation & involvement	X	Post-construction stormwater management
	Illicit discharge detection & elimination	X	Pollution prevention/Good housekeeping

BMP Title: Inspection Analysis and Frequency

BMP Description: The City will keep records of inspection results and evaluate the frequency of inspections based on maintenance patterns. Inspection results will be summarized in the Annual Report.

Measurable Goals:
- Number inspected
- Number of inspection modifications
- Annual Report summary of inspection results

Timeline / Implementation Schedule:
- 2006-2011 Evaluate maintenance patterns every two years (2007, 2009, and 2011) and modify inspection frequency as required.

Specific Components & Notes (optional):
- Pond, Outfall, and Sediment Basin Inspection (BMP 6-1)
- Sanitary Sewer Maintenance and Inspection Program (6-6)
- Outfall and pond inspection for MS4 System (6-11)

Responsible Person	Responsible Department
Name: Chad Adams	**Title:** Public Works
Title: City Administrator	**Dept. Head:** Steve Scherer
Phone: 763-473-4643	**Phone:** 763-473-4643
E-mail: Chad.Adams@ci.medina.mn.us	**E-mail:** Steve.Scherer@ci.medina.mn.us

Educational components related to this BMP (description or number – optional):

Audience: City Employees

Educational goal: To ensure employees are adjusting inspection frequency in accordance with maintenance patterns.

Activities: See BMP Description above

Implementation Plans: See Timeline/Implementation Schedule above

Performance Measures: See Measurable Goals above

BMP Page

MS4 Name: City of Medina

Unique Identifying Number: 6-14

Minimum Control Measures Addressed by This BMP

	Public education & outreach		Construction site runoff controls
	Public participation & involvement		Post-construction stormwater management
X	Illicit discharge detection & elimination	X	Pollution prevention/Good housekeeping

BMP Title: Stockpile, Storage and Material Handling Program

BMP Description: The City will develop a procedure to identify and manage all stockpiles from soil, salt or used metals to ensure appropriate BMPS are in place and to prevent the offsite migration through leaching into the soil or during runoff events

Measurable Goals:	**Timeline / Implementation Schedule:**
• Identification of exposed stockpiles	• 2006 Determine locations stockpiles • 2007 Implement stockpile, storage and material handling program • 2008-2011 Conduct annual inspections and review and revise program needed

Specific Components & Notes (optional):

- Adopt an integrated inspection program to annually inspect stockpiles, storage and material handling areas.

Responsible Person	**Responsible Department**
Name: Chad Adams	**Title:** Public Works
Title: City Administrator	**Dept. Head:** Steve Scherer
Phone: 763-473-4643	**Phone:** 763-473-4643
E-mail: Chad.Adams@ci.medina.mn.us	**E-mail:** Steve.Scherer@ci.medina.mn.us

Educational components related to this BMP (description or number – optional):

Audience: City Employees
Educational goal: Prevent discharges from stockpiles, storage and material handling areas
Activities: See BMP Description above
Implementation Plans: See Timeline/Implementation Schedule above
Performance Measures: See Measurable Goals above

BMP Page

MS4 Name: City of Medina

Unique Identifying Number: 6-15

Minimum Control Measures Addressed by This BMP

	Public education & outreach		Construction site runoff controls
	Public participation & involvement		Post-construction storm water management
	Illicit discharge detection & elimination	X	Pollution prevention/Good housekeeping

BMP Title: Record Keeping and Reporting

BMP Description: The City will submit an annual report according to the requirements outlined in the current MS4 permit and retain all records required for at least three (3) years beyond the term of the permit. All records, including the approved SWPPP, will be available to the public at reasonable times during regular business hours after a 7 day advance notice and reasonable charge for requested copies.

Measurable Goals:	**Timeline / Implementation Schedule:**
• Develop record keeping procedure • Implement record keeping procedure	• 2006-2007 : Develop record keeping procedure • 2008-2011: Implement record keeping procedure

Specific Components & Notes (optional):

Responsible Party	**Responsible Department**
Name: Chad Adams	**Title:** Public Works
Title: City Administrator	**Dept. Head:** Steve Scherer
Phone: 763-473-4643	**Phone:** 763-473-4643
E-mail: Chad.Adams@ci.medina.mn.us	**E-mail:** Steve.Scherer@ci.medina.mn.us

Educational components related to this BMP (description or number – optional):

BMP Description Sheet

MS4 Name: City of Medina

Unique Identifying Number: 6-16

Minimum Control Measures Addressed by This BMP

X	Public education & outreach	X	Construction site runoff controls
	Public participation & involvement	X	Post-construction storm water management
X	Illicit discharge detection & elimination	X	Pollution prevention/Good housekeeping

BMP Title: Municipal Employee Training Program	
BMP Description: The City will require training for all municipal employees to prevent or reduce pollutant runoff from City operations. The training program will be focused at preventing or reducing pollutant runoff from MS4 operations such as: • Park and open space maintenance • Fleet and building maintenance • New construction and land disturbances • Storm sewer system maintenance	
Measurable Goals: • Type of training • Number of employees receiving training	**Timeline / Implementation Schedule:** 2006-2011 Current and ongoing (annually). Update and revise as needed.
Specific Components & Notes (optional): • Operator training • Construction site erosion and sediment training (Mn/DOT Certification) • Fertilizer application training • Hazardous material handling and spill response training	
Responsible Person for this BMP	**Responsible Department or Organization**
Name: Chad Adams	Dept. or Org.: Public Works
Title: City Administrator	Dept. Head: Steve Scherer
Phone: (763) 473-4643	Phone: (763) 473-4643
E-mail: chad.adams@ci.medina.mn.us	E-mail: steve.scherer@ci.medina.mn.us
Educational components related to this BMP (description or number – optional):	

BMP Page

MS4 Name: City of Medina
Unique Identifying Number: 7-1*
Minimum Control Measures Addressed by This BMP

	Public education & outreach		Construction site runoff controls
	Public participation & involvement	X	Post-construction stormwater management
X	Illicit discharge detection & elimination	X	Pollution prevention/Good housekeeping

BMP Title: Discharge Affecting Source Water Protection Areas

BMP Description: The Minnesota Department of Health has not created/nor approved a Part I and Part II Wellhead Protection Plan (WPP) for the City including the necessary map illustrating the wells and source waters for drinking water supply management areas identified as vulnerable under Minn. R. 4720.5205, 4720.5210, and 4720.5330. The City will follow the recommendations outlined in the WPP once it is developed and will revise the SWPPP accordingly at that time.

The City will coordinate with MDH to determine if the City jurisdictional area includes land within the source water protection area for surface water intakes identified in the source water assessments conducted by the Mn Dept. of Health under the federal Safe Drinking Water Act, U.S.C. 300j-13. If so, the City will work with the appropriate organizations to address potential impacts to the areas to the MEP and revise the SWPPP accordingly.

Measurable Goals:	Timeline / Implementation Schedule:
• Implement the recommendations of the Wellhead Protection Plan once developed.	• Upon development of a Wellhead Protect Plan
• Determine areas within the source water protection area for surface water intakes identified in the source water assessments conducted by the Mn Dept. of Health under the federal Safe Drinking Water Act, U.S.C. 300j-13.	• According to MDH schedule
• Coordinate with appropriate organizations and revise SWPPP accordingly.	• Upon development of a Wellhead Protection Plan or according to the MDH schedule for source water protection areas.

Specific Components & Notes (optional):

- Cooperate with adjacent municipalities or organizations to protect other MDH identified high or moderate vulnerable areas to when they are found to overlap the City's jurisdictional boundary. Currently there are no areas that have been identified with high or medium vulnerability.

Responsible Party	Responsible Department
Name: Chad Adams	Dept. or Org.: Public Works
Title: City Administrator	Dept. Head: Steve Scherer
Phone: 763-473-4643	Phone: 763-473-4643
E-mail: chad.adams@ci.medina.mn.us	E-mail: steve.scherer@ci.medina.mn.us

Educational components related to this BMP (description or number – optional):
Audience: Citizens, well owners, cooperative agencies/organizations

Educational goal: To protect drinking water sources from contamination from stormwater runoff pollution

BMP Page

MS4 Name: City of Medina

Unique Identifying Number: 7-2

Permit Requirement Addressed by This BMP: Part IV.D.

BMP Title: Impaired Water(s) Review Process

BMP Description: The City of Medina will review all discharges from our MS4 system to impaired waters, as defined by the current USEPA approved 303(d) list. The steps taken during this review, included in this BMP, will be instigated by one or more of the following trigger event:

1. Extension of MS4 Permit coverage upon approval of the City's submittal materials and Application by the MPCA Commissioner
2. Release of a new 303(d) list of Impaired Waters by the MPCA that is approved by the USEPA.

In **Step 1**, the City will review the Impaired Waters List to determine whether there are any impaired waters located within five miles of the City's boundaries that receive discharge from the City's MS4. Such waters will be identified as impaired waters of concern. The City will depend on the 303(d) list of Impaired Waters to make this determination. Where the information in the list is insufficient, the City will contact the MPCA for further clarification.

In **Step 2**, the City will identify the location(s) of discharge(s) from the City's MS4 to the impaired waters of concern identified in Step 1. Discharges may include pipes, outlets, ditches, swales, street gutters, or other discrete conveyances for stormwater runoff. As part of Step 2, the City will also delineate the watershed area within the City's jurisdiction that discharges to each impaired water of concern identified in Step 1.

In **Step 3**, the City will prepare an impaired waters evaluation addressing the hydrology, land use, and other characteristics of each watershed area delineated in Step 2.

In **Step 4**, the City will prepare an impaired waters report. This report will address the results of the steps listed above along with a determination of whether changes to the City's SWPPP are warranted to reduce the impact from the City's MS4 stormwater discharge to each impaired water of concern.

In **Step 5**, the City will incorporate the changes identified in the impaired waters report into the City's SWPPP, as per the provisions of the MS4 General Permit regarding SWPPP modifications. The changes to the SWPPP will be reported in the subsequent Annual Report, along with a summary of the process (as listed above) that resulted in the changes.

Measurable Goals:	Timeline / Implementation Schedule:
Step 1: Completion of the City's determination whether there are impaired waters of concern	**Step 1:** Within 6 months of a trigger event
Step 2: A map showing the locations of discharges and delineated watershed areas.	**Step 2:** Within 6 months of a trigger event
Step 3: Completion of the impaired waters evaluation	**Step 3:** Within 9 months of a trigger event
Step 4: Completion of the impaired waters report	**Step 4:** Within 12 months of a trigger event
Step 5: Changes to the City's SWPPP	**Step 5:** With 18 months of a trigger event

Specific Components & Notes (optional):

The steps listed in this BMP will be executed in response to the listing of impaired waters. It is likely that these tasks will precede (perhaps by years) the initiation and completion of the TMDL Study and Waste Load Allocation for these impaired waters. The data, information, and understanding of the water quality problems and solutions for the impaired waters will be significantly less at the time of the preparation of these materials than when the TMDL Study and the Waste Load Allocation have been completed. For this reason, the level of analysis and the breadth of the response by the City will be significantly less for the preparation of these materials and modifications to the SWPPP at this time than at the time of the completion of the TMDL Study and the Waste Load Allocation. The City's analysis and response for this BMP will be based on data and information that are readily available at the time.

Responsible Party	Responsible Department
Name: Chad Adams	Dept. or Org.: Public Works
Title: City Administrator	Dept. Head: Steve Scherer
Phone: 763-473-4643	Phone: 763-473-4643
E-mail: chad.adams@ci.medina.mn.us	E-mail: steve.scherer@ci.medina.mn.us

Educational components related to this BMP (description or number – optional):

The City will make efforts to include information about the TMDL/Impaired Waters programs in its stormwater education materials for the public.

BMP Page

MS4 Name: City of Medina

Unique Identifying Number: 7-3

Minimum Control Measures Addressed by This BMP

	Public education & outreach		Construction site runoff controls
	Public participation & involvement		Post-construction storm water management
	Illicit discharge detection & elimination		Pollution prevention/Good housekeeping

BMP Title: Response to TMDL Waste Load Allocation

BMP Description: If a USEPA-approved TMDL is developed and the MPCA determines that the City is within the drainage area of the impaired water and covered by the TMDL Waste Load Allocation, the City will review the adequacy of the SWPPP to determine whether it meets the TMDL's Waste Load Allocation. If the City determines that the SWPPP does not meet the applicable requirements, schedules and objectives of the TMDL, the City will make appropriate modifications to the SWPPP.

Measurable Goals:	**Timeline / Implementation Schedule:**
Appropriate modifications to the SWPPP	Within 18 months after the TMDL Waste Load Allocation is approved by USEPA and the MPCA determines that the City is within the drainage area of the impaired water and covered by the TMDL Waste Load Allocation

Specific Components & Notes (optional):

The City will rely on information made available by the MPCA regarding the location, drainage areas, and Waste Load Allocations for TMDLs and impaired waters.

Responsible Party	**Responsible Department**
Name: Chad Adams	Dept. or Org.: Public Works
Title: City Administrator	Dept. Head: Steve Scherer
Phone: 763-473-4643	Phone: 763-473-4643
E-mail: chad.adams@ci.medina.mn.us	E-mail: steve.scherer@ci.medina.mn.us

Educational components related to this BMP (description or number – optional):

The City will make efforts to include information about the TMDL Waste Load Allocation and the TMDL/Impaired Waters programs in its stormwater education materials for the public.

BMP Page

MS4 Name: City of Medina

Unique Identifying Number: 7-4

Minimum Control Measures Addressed by This BMP

	Public education & outreach		Construction site runoff controls
	Public participation & involvement		Post-construction storm water management
	Illicit discharge detection & elimination		Pollution prevention/Good housekeeping

BMP Title: ORVW Assessment Wolsfeld Woods Scientific and Natural Area

BMP Description: A portion of the Wolsfeld Woods Scientific and Natural Area (SNA) is within the City of Medina and there are tributary areas within the City that drain to the SNA. This SNA is designated an "Outstanding Resource Value Water" or ORVW in Minnesota statute and is considered to be a water with Prohibited Discharge.

According to the Municipal Separate Storm Sewer System (MS4) General Permit the City must assess how the Storm Water Pollution Prevention Plan (SWPPP) can be reasonably modified to eliminate new and expanded discharges to ORVW.

To determine whether SWPPP modifications are necessary, Medina will prepare an assessment of its discharge to the ORVW by mapping the discharge points and the DNR minor subwatersheds discharging to the SNA. The City will map 1988, current, and 2020 proposed land uses in the drainage area for Wolsfeld Woods SNA. The maps will be used to prepare comparative spreadsheet tables of land use composition across the three time frames. The City will then associate annualized runoff model input values to each of the land use conditions. Values such as runoff coefficient, event mean concentrations for total phosphorus (TP) and total suspended solids (TSS), and average annual precipitation will be used to calculate annual loadings for water volume, TP, and TSS for each of the three timeframes. To the extent possible, loadings of other pollutants will be estimated based on those for the three primary pollutants.

The loadings will be calculated under two conditions:

1. With no BMPs assumed
2. With BMPs assumed where applicable

In the second condition the actual performance of individual BMPs will not be modeled. Rather, a generalized performance metric will be established based on standard practice in place at the time a particular area developed. This standard practice (whether it be NURP, or Walker or some other sizing criteria) will be applied to the simple spreadsheet model as a uniform reduction.

If the assessment shows that a new and expanded discharge has occurred or that one will occur due to Medina's 2020 land use plan, then the City will review their existing SWPPP to determine the extent to which their existing BMPs mitigate the expanded

loading and, if necessary, propose SWPPP modifications to eliminate the expanded loading. The SWPPP modifications will be a BMP-based, qualitative response, which may include ordinance modifications, zoning changes, or other types of structural and non-structural BMPs.

The assessment and proposed SWPPP modifications will be made available for public comment during Medina's 2009 annual MS4 public comment period and annual MS4 meeting. Subsequent to their annual public comment period and annual meeting, the assessment, proposed SWPPP modifications and public comments will be submitted with Medina's annual report.

Measurable Goals:	**Timeline / Implementation Schedule:**
• Map the discharge points and the DNR minor subwatersheds discharging in whole or in part to the SNA. • Provide a narrative estimate of the percent impervious cover for the 1998, current and 2020 proposed land use. • Provide an assessment of the 1988, current and 2020 proposed land use to determine if an increase in discharge has occurred. • If the City determines that an increase in discharge has or will result, they will make a reasonable attempt to modify their SWPPP to eliminate the discharge. • Public notice the assessment results and any proposed SWPPP modifications. • Submit the results of the assessment and any public comments with the 2009 annual report.	• Within 90 days of extension of coverage - Map the discharge points and the DNR minor subwatersheds discharging in whole or in part to the SNA. • With 90 days of extension of coverage - Provide a narrative estimate of the percent impervious cover for the 1998, current and 2020 proposed land use. • May 2009 - Provide an assessment of the 1988, current and 2020 proposed land use to determine if an increase in discharge has occurred. • May 2009 - If the City determines that an increase in discharge has or will result they will make a reasonable attempt to modify their SWPPP to eliminate the discharge. • April 2009 - Public notice the assessment results and any proposed SWPPP modifications. • June 30th, 2009 - Submit the results of the assessment and any public comments with the annual report.

Specific Components & Notes (optional):

Responsible Party	**Responsible Department**
Name: Chad Adams	Dept. or Org.: Public Works
Title: City Administrator	Dept. Head: Steve Scherer
Phone: 763-473-4643	Phone: 763-473-4643
E-mail: chad.adams@ci.medina.mn.us	E-mail: steve.scherer@ci.medina.mn.us

Educational components related to this BMP (description or number – optional):

BMP Page

MS4 Name: City of Medina

Unique Identifying Number: 8-1

Minimum Control Measures Addressed by This BMP

	Public education & outreach		Construction site runoff controls
	Public participation & involvement	X	Post-construction storm water management
	Illicit discharge detection & elimination		Pollution prevention/Good housekeeping

BMP Title: Stormwater Retrofit and Erosion Control Projects

BMP Description: The City of Medina where feasible will implement retrofit projects within the Lake Independence Watershed, which may consist of the construction of rain gardens, filtration basins and ravine/gulley repair.

Measurable Goals:	**Timeline / Implementation Schedule:**
• Number of project identified • Number of projects completed • Pounds phosphorous load reduced	• 2009 - Assessment of potential projects • 2010 - 2011 - Complete projects as funding becomes available

Specific Components & Notes (optional):

Responsible Party	**Responsible Department**
Name: Chad Adams	Dept. or Org.: Public Works
Title: City Administrator	Dept. Head: Steve Scherer
Phone: 763-473-4643	Phone: 763-473-4643
E-mail: chad.adams@ci.medina.mn.us	E-mail: steve.scherer@ci.medina.mn.us

Educational components related to this BMP (description or number – optional):

BMP Page

MS4 Name: City of Medina

Unique Identifying Number: 8-2

Minimum Control Measures Addressed by This BMP

	Public education & outreach		Construction site runoff controls
	Public participation & involvement	X	Post-construction storm water management
	Illicit discharge detection & elimination		Pollution prevention/Good housekeeping

BMP Title: Shoreline Restoration

BMP Description: The City of Medina Lake Independence shoreline restoration program provides up to 75% funding to qualifying Lake Independence property owners for the purposes of restoring their shoreline and providing natural buffers.

- Shoreline stabilization - eliminates erosion
- Buffer establishment - filters runoff and promotes goose removal

Measurable Goals:	Timeline / Implementation Schedule:
• Number of grants given • Number of projects completed	• 2008 - 2009 - Provide a cost-share grant to interested landowners along Lake Independence • 2009 -2010 - Restore shorelines

Specific Components & Notes (optional):

Responsible Party	Responsible Department
Name: Chad Adams	Dept. or Org.: Public Works
Title: City Administrator	Dept. Head: Steve Scherer
Phone: 763-473-4643	Phone: 763-473-4643
E-mail: chad.adams@ci.medina.mn.us	E-mail: steve.scherer@ci.medina.mn.us

Educational components related to this BMP (description or number – optional):

BMP Page

MS4 Name: City of Medina

Unique Identifying Number: 8-3

Minimum Control Measures Addressed by This BMP

	Public education & outreach		Construction site runoff controls
	Public participation & involvement	X	Post-construction storm water management
	Illicit discharge detection & elimination		Pollution prevention/Good housekeeping

BMP Title: Individual Sewage Treatment System (ISTS) Compliance Program

BMP Description: The City has adopted a program to complete an MPCA sewage system compliance inspection for all areas within the Lake Independence Watershed.

1. Inspect properties not sold or newly constructed within the last ten years
2. Prioritize non-compliant systems for remediation
3. Repair or replace non-compliant systems
4. Monitor pumping operations to make sure systems are pumped on a three year interval

Measurable Goals:	**Timeline / Implementation Schedule:**
• Number of inspection records received • Number of systems repaired or replaced • Number of systems pumped	2008 - Request inspection records for all properties not newly constructed or sold within the last ten years 2009 - Prioritize non-compliant systems for remediation 2010 - Repair or Replace non-compliant systems 2010 - 2012 - Monitor pumping operations to make sure systems are pumped on a three year interval

Specific Components & Notes (optional):

Responsible Party	**Responsible Department**
Name: Chad Adams	Dept. or Org.: Public Works
Title: City Administrator	Dept. Head: Steve Scherer
Phone: 763-473-4643	Phone: 763-473-4643
E-mail: chad.adams@ci.medina.mn.us	E-mail: steve.scherer@ci.medina.mn.us

Educational components related to this BMP (description or number – optional):

BMP Page

MS4 Name: City of Medina

Unique Identifying Number: 8-4

Minimum Control Measures Addressed by This BMP

	Public education & outreach		Construction site runoff controls
	Public participation & involvement	X	Post-construction storm water management
	Illicit discharge detection & elimination		Pollution prevention/Good housekeeping

BMP Title: Wetland Buffer Ordinance

BMP Description: The City has recently adopted a new wetland buffer ordinance, which requires the establishment of buffers around wetlands when doing a project with wetlands. The City will quantify the number of buffers that are established to determine an estimate of yearly phosphorous reduction.

Measurable Goals:

- Number of projects requiring wetland buffers
- Acres of wetland buffer established
- Pounds phosphorous load reduced

Timeline / Implementation Schedule:

2008 - Wetland buffer ordinance adopted
2009 - 2011 - Program ongoing, update as needed.

Specific Components & Notes (optional):

Responsible Party	Responsible Department
Name: Chad Adams	Dept. or Org.: Public Works
Title: City Administrator	Dept. Head: Steve Scherer
Phone: 763-473-4643	Phone: 763-473-4643
E-mail: chad.adams@ci.medina.mn.us	E-mail: steve.scherer@ci.medina.mn.us

Educational components related to this BMP (description or number – optional):

BMP Page

MS4 Name: City of Medina

Unique Identifying Number: 8-5

Minimum Control Measures Addressed by This BMP

	Public education & outreach		Construction site runoff controls
	Public participation & involvement	X	Post-construction storm water management
	Illicit discharge detection & elimination		Pollution prevention/Good housekeeping

BMP Title: Yard Waste Disposal Site

BMP Description: The City currently provides a location for all residents within the City of Medina to dispose of their yard waste. This program will be advertised to residents within the Lake Independence neighborhood to promote the disposal of leaves at the City facility.

Measurable Goals:	**Timeline / Implementation Schedule:**
• Neighborhood where material collected from • Quantity of material collected	• 2009-2011 - Ongoing, review and update as needed

Specific Components & Notes (optional):

Responsible Party	**Responsible Department**
Name: Chad Adams	Dept. or Org.: Public Works
Title: City Administrator	Dept. Head: Steve Scherer
Phone: 763-473-4643	Phone: 763-473-4643
E-mail: chad.adams@ci.medina.mn.us	E-mail: steve.scherer@ci.medina.mn.us

Educational components related to this BMP (description or number – optional):

APPENDIX C
Watershed Rules and Standards

Pioneer-Sarah Creek
Watershed Management Commission

Rules and Standards

Adopted: March 4, 2015

Effective: June 1, 2015

PIONEER-SARAH CREEK
WATERSHED MANAGEMENT COMMISSION
RULES AND STANDARDS

POLICY STATEMENT

The Pioneer-Sarah Creek Watershed Management Commission is a Joint Powers Association of the State under the Minnesota Watershed Act, and a watershed management organization as defined in the Metropolitan Surface Water Management Act. These acts provide the Commission with power to accomplish its statutory purpose: the conservation, protection, and management of water resources in the boundaries of the watershed through sound scientific principles. The Commission has adopted a water resources management plan pursuant to the Acts. These Rules implement the plan's principles and objectives.

Land alteration and utilization can affect the rate and volume and degrade the quality of surface water runoff. Sedimentation from ongoing erosion and construction activities can reduce hydraulic capacity of waterbodies and degrade water quality. Water quality problems already exist in many waterbodies in the watershed. Most of these waterbodies have been designated by the State of Minnesota as Impaired Waters, and do not meet state water quality standards.

Activities that increase the rate or volume of stormwater runoff will aggravate existing flooding problems and contribute to new ones. Activities that degrade runoff quality will cause quality problems in receiving water. Activities that fill floodplain or wetland areas will reduce flood storage and hydraulic capacity of waterbodies, and will degrade water quality by eliminating the filtering capacity of such areas.

These Rules and Standards protect the public health, welfare, and natural resources of the watershed by regulating the alteration of land and waters in the watershed to 1) reduce the severity and frequency of high water, 2) preserve floodplain and wetland storage capacity, 3) improve the chemical and physical quality of surface waters, 4) reduce sedimentation, 5) preserve the hydraulic and navigational capacities of waterbodies, 6) promote and preserve natural infiltration areas, and 7) preserve natural shoreline features. In addition to protecting natural resources, these Rules and Standards are intended to minimize future public expenditures on problems caused by land and water alterations.

RELATIONSHIP WITH MUNICIPALITIES AND COUNTY

The Commission recognizes that the control and determination of appropriate land use is the responsibility of the municipalities. The Commission will review projects involving land-disturbing activities in accordance with these Rules and Standards. The Commission intends to be active in the regulatory process to ensure that water resources are managed in accordance with its goals and policies.

The Commission desires to provide technical advice to the municipalities in the preparation of local stormwater management plans and the review of projects that may affect water resources prior to investment of significant public or private funds.

RULE A. DEFINITIONS

For the purposes of these Rules, unless the context otherwise requires, the following words and terms shall have the meanings set forth below. References in these Rules to specific sections of the Minnesota Statutes or Rules include amendments, revisions or recodifications of such sections. The words "shall" and "must" are mandatory; the word "may" is permissive.

100 Year Event. The rainfall depth with a 1 percent chance of occurring in a given year.

Abstraction. Removal of stormwater from runoff, by such methods as infiltration, evaporation, transpiration by vegetation, and capture and reuse, such as capturing runoff for use as irrigation water.

Agricultural Activity. The use of land for the production of agronomic, horticultural or silvicultural crops, including dairy animals, food animals, nursery stock, sod, fruits, vegetables, flowers, cover crops, grains, Christmas trees, and for grazing.

Alteration or Alter. When used in connection with public waters or wetlands, any activity that will change or diminish the course, current, or cross-section of public waters or wetlands.

Applicant. Any person or political subdivision that submits an application to the Commission for a project review under these Rules.

Best Management Practices (BMPs). Techniques proven to be effective in controlling runoff, erosion and sedimentation including those documented in the Minnesota Construction Site Erosion and Sediment Control Planning Handbook (BWSR 1988), Protecting Water Quality in Urban Areas (MPCA 2000), and the Minnesota Stormwater Manual (MPCA 2005) as revised.

Biofiltration. Using living material to capture and/or biologically degrade or process pollutants prior to discharging stormwater, such as directing runoff through a vegetated buffer or to a rain garden or vegetated basin with an underdrain.

Bioretention. A terrestrial-based (upland, as opposed to wetland) water quality and water quantity control process. Bioretention employs a simplistic, site-integrated design that provides opportunity for runoff infiltration, filtration, storage and water uptake by vegetation.

Buffer Strip. An area of natural, unmaintained, vegetated ground cover abutting or surrounding a watercourse or wetland.

BWSR. The Minnesota Board of Water and Soil Resources.

Commission. The Pioneer-Sarah Creek Watershed Management Commission.

Commissioners. The Board of Commissioners of the Pioneer-Sarah Creek Watershed Management Commission.

Compensatory Storage. Excavated volume of material below the floodplain elevation required to offset floodplain fill.

County. Hennepin County, Minnesota.

Dead Storage. The permanent pool volume of a water basin or the volume below the runout elevation of a water basin.

Detention Basin. Any natural or manmade depression for the temporary storage of runoff.

Development. Any proposal to subdivide land, any land-disturbing activity or creation of impervious surface.

Directly Connected Impervious Surface. Any hard surface (rooftop, driveway, sidewalk, roadway, etc.) from which runoff is not subject to loss beyond initial abstraction before being routed to the downstream collection and conveyance system.

Disturbance. See Land Disturbing Activity.

Drain or Drainage. Any method for removing or diverting water from waterbodies, including excavation of an open ditch, installation of subsurface drainage tile, filling, diking, or pumping.

Erosion. The wearing away of the ground surface as a result of wind, flowing water, ice movement, or land disturbing activities.

Erosion and Sediment Control Plan. A plan of BMPs or equivalent measures designed to control runoff and erosion and to retain or control sediment on land during the period of land disturbing activities in accordance with the standards set forth in these Rules.

Excavation. The artificial removal of soil or other earth material.

Fill. The deposit of soil or other material by artificial means.

Filtration. A process by which stormwater runoff is captured, temporarily stored, and routed through a filter bed to improve water quality and slow down stormwater runoff.

Floodplain. The area adjacent to a waterbody that is inundated during a 1% chance (100-year) flood, as defined by the FEMA Flood Insurance Study for the member City.

Impaired Water. A waterbody that does not meet state water quality standards and that has been included on the MPCA Section 303(d) list of Impaired Waters of the state.

Impervious Surface. A surface compacted or covered with material so as to be highly resistant to infiltration by runoff. Impervious surface shall include roads, driveways and parking areas, whether or not paved, sidewalks greater than 3 feet wide, patios, tennis and basketball courts, swimming pools, covered decks and other structures. Open decks with joints at least ¼ inch wide, areas beneath overhangs less than 2 feet wide, and sidewalks 3 feet or less wide shall not constitute impervious surfaces under these Rules.

Infiltration. The passage of water into the ground through the soil.

Infiltration Area. Natural or constructed depression located in permeable soils that capture, store and infiltrate the volume of stormwater runoff associated with a particular design event.

Interested Party. A person or political subdivision with an interest in the pending subject matter.

Land Disturbing Activity. Any change of the land surface to include removing vegetative cover, excavation, fill, grading, and the construction of any structure that may cause or contribute to erosion or the movement of sediment into waterbodies. The use of land for agricultural activities, or improvements such as mill an overlay or concrete rehabilitation projects that do not disturb the underlying soil, shall not constitute a land disturbing activity under these Rules.

Landlocked Basin. A basin that is 1 acre or more in size and does not have a natural outlet at or below the 1% chance (100-year) flood elevation as determined by the 1% chance (100-year), 10-day runoff event.

Low Floor. The finished surface of the lowest floor of a structure.

Member City. Any city wholly or partly within the Commission's boundary that has executed the Joint Powers Agreement.

MnDOT. The Minnesota Department of Transportation.

MPCA. The Minnesota Pollution Control Agency.

Municipality. Any city wholly or partly within the Commission's boundary.

NPDES. National Pollutant Discharge Elimination System.

NURP. The Nationwide Urban Runoff Program developed by the Environmental Protection Agency to study stormwater runoff from urban development.

Ordinary High Water Level (OHW). The elevation delineating the highest water level which has been maintained for a sufficient period of time to leave evidence upon the landscape,

commonly that point where the natural vegetation changes from predominantly aquatic to predominantly terrestrial. For watercourses, the OHW level is the elevation of the top of the bank of the channel. If an OHW has been established for a waterbody by the Minnesota Department of Natural Resources, that will constitute the OHW under this definition.

Owner. The owner of a parcel of land or the purchaser under a contract for deed.
Parcel. A parcel of land designated by plat, metes, and bounds, registered land survey, auditor's subdivision, or other accepted means and separated from other parcels or portions by its designation.

Person. Any individual, trustee, partnership, unincorporated association, limited liability company or corporation.

Political Subdivision. A municipality, county or other political division, agency or subdivision of the state.

Project. A space, parcel, or parcels of real property owned by one or more than one person which is being or is capable of being developed or redeveloped as a single project.

Public Health and General Welfare. Defined in Minnesota Statutes, Section 103D.011, Subdivisions 23 and 24.

Public Waters. Any waters as defined in Minnesota Statutes, Section 103G.005, Subdivision 15.

Public Waters Wetland. Any wetland as defined in Minnesota Statutes, Section 103G.005, Subdivision 15a.

Redevelopment. Any proposal to re-subdivide land, or any land-disturbing activity or addition of impervious surface to a developed site.

Runoff. Rainfall, snowmelt or irrigation water flowing over the ground surface.

Sediment. Soil or other surficial material transported by surface water as a product of erosion.

Sedimentation. The process or action of depositing sediment.

Shoreland Protection Zone. Land located within a floodplain or within 1,000 feet of the OHW of a public water or public waters wetland or 300 feet of a public waters watercourse.

Site. A space, parcel, or parcels of real property owned by one or more than one person which is being or is capable of being developed or redeveloped as a single project.

Standard. A required level of quantity, quality, or value.

Stormwater Management Plan. A plan for the permanent management and control of runoff prepared and implemented in accordance with the standards set forth in these Rules.

Structure. Anything manufactured, constructed or erected which is normally attached to or positioned on land, including portable structures, earthen structures, walks, roads, water and storage systems, drainage facilities and parking lots.

Subdivision or Subdivide. The separation of a parcel of land into two or more parcels.

TMDL. A Total Maximum Daily Load is the maximum amount of a pollutant that a waterbody can receive and still meet water quality standards. "TMDL" can also refer to a study that calculates that load, or to the allocation of that allowable load to its various sources. An Implementation Plan may be part of the TMDL study or it may be a separate document that sets forth the steps that will be taken to achieve the TMDL.

Volume Management. The retention and abstraction of a certain volume of stormwater runoff onsite through techniques such as infiltration, evapotranspiration, and capture and reuse.

Water Basin. An enclosed natural depression with definable banks capable of containing water that may be partly filled with public waters.

Waterbody. All water basins, watercourses and wetlands as defined in these Rules.

Watercourse. Any natural or improved stream, river, creek, ditch, channel, culvert, drain, gully, swale, or wash in which waters flow continuously or intermittently in a definite direction.

Water Resources Management Plan. The watershed management plan for the Commission adopted and implemented in accordance with Minnesota Statutes, Section 103B.231.

Watershed. Region draining to a specific watercourse or water basin.

Wetland. Land transitional between terrestrial and aquatic systems as defined in Minnesota Statutes, Section 103G.005, Subdivision 19.

Wetland Conservation Act (WCA). Minnesota Wetland Conservation Act of 1991 as amended.

RULE B. PROCEDURAL REQUIREMENTS

1. **APPLICATION REQUIRED**. Any person or political subdivision undertaking an activity for which a project review is required by these Rules shall first submit to the Commission a project review application, design data, plans, specifications, fees, and such other information and exhibits as may be required by these Rules. Applications shall be signed by the owner, or the owner's authorized agent, except for activities of a political subdivision which may be signed by either the owner or the general contractor. All project review applications must be authorized by the municipality where the proposed project is located.

2. **FORMS**. Project review applications shall be submitted on forms provided by the Commission. Forms are available at the Commission office or Web site.

3. **ACTION BY COMMISSION**. The Commission shall act within 60 days after receipt of a complete application, including all required information, exhibits and fees. If a state or federal law or court order requires a process to occur before the Commission acts on an application, or if an application requires prior approval of a state or federal agency, the deadline for the Commission to act is extended to 60 days after completion of the required process or the required prior approval is granted. The Commission may extend the initial 60-day period by providing written notice of the extension to the applicant. The extension may not exceed 60 days unless approved by the applicant.

4. **SUBMITTAL**. A complete project review application with all required information and exhibits shall be filed with the Commission at least 14 calendar days prior to the scheduled meeting date of the Commission. Late or incomplete submittals will be scheduled to a subsequent meeting date.

5. **CONDITIONS**. A project review may be approved subject to reasonable conditions to assure compliance with these Rules. The conditions may include a requirement that the applicant and owner enter into an agreement with the member city in a form acceptable to the Commission to a) specify responsibility for the construction and future maintenance of approved structures or facilities, b) document other continuing obligations of the applicant or owner, c) grant reasonable access to the proper authorities for inspection, monitoring and enforcement purposes, d) affirm that the Commission or other political subdivisions can require or perform necessary repairs or reconstruction of such structures or facilities, e) require indemnification of the Commission for claims arising from issuance of the approved project review or construction and use of the approved structures or facilities, and f) reimburse the reasonable costs incurred to enforce the agreement. Project reviews and agreements may be filed for record to provide notice of the conditions and continuing obligations.

6. **ISSUANCE OF PROJECT REVIEWS**. The Commission will issue a project review approval only after the applicant has satisfied all requirements of these Rules and paid all required fees.

7. **VALIDITY**. Issuance of a project review approval based on plans, specifications, or other data shall not prevent the Commission from thereafter requiring the correction of errors in the approved plans, specifications and data, or from preventing any activity being carried on thereunder in violation of these Rules.

8. **MODIFICATIONS**. The applicant shall not modify the approved activity or plans and specifications on file with the Commission without the prior approval of the Commission.

9. **INSPECTION AND MONITORING**. With permission of the property owner and under the authority of the member city, the Commission may perform such field inspections and monitoring of the approved activity as the Commission deems necessary to determine compliance with the conditions of the project review and these Rules. Any portion of the activity not in compliance shall be promptly corrected. In applying for a project review, the applicant consents to entry upon the land for field inspections and monitoring, or for performing any work necessary to bring the activity into compliance.

10. **SUSPENSION OR REVOCATION**. The Commission may suspend or revoke a project review approved under these Rules whenever the project review approval is issued in error or on the basis of incorrect information supplied, or in violation of any provision of these Rules, or if the preliminary and final project approvals received from the municipality or county are not consistent with the conditions of the approved project review.

11. **EXPIRATION OF COMMISSION APPROVALS.** An approved project review shall expire and become null and void if the approved activity is not commenced within one year from date of approval, or if the approved activity is suspended or abandoned for a period of one year from the date the activity originally commenced. With the approval of the affected member city, applicants may apply for an extension of that period if the city review process is extended beyond the usual review period. Before an activity delayed for one year or more can recommence, the project approval must be renewed. Any applicant may apply for an extension of time to commence the approved activity under an unexpired project review approval.

    An application for renewal or extension must be in writing, and state the reasons for the renewal or extension. Any plan changes and required fees must be included with the application. There must be no unpaid fees or other outstanding violations of the approval being renewed or extended. An application for extension must be received by the Commission at least 30 days prior to the approval's expiration. The Commission shall consider the application for renewal or extension on the basis of the Rules in effect on the date the application is being considered. The Commission may extend the time for commencing the approved activity for a period not exceeding one year upon finding that

circumstances beyond the control of the applicant have prevented action from being taken.

12. **SEVERABILITY**. If any provision of these Rules is adjudged unconstitutional or invalid by a court of competent jurisdiction, the remainder of these Rules shall not be affected thereby.

RULE C. GENERAL STANDARDS

1. **POLICY**. It is the policy of the Commission to protect the water resources of the watershed by requiring that all activities within the watershed comply with minimum standards for the protection of water quality and the environment.

2. **REGULATION.**

a) All land disturbing activities, whether requiring a project review under these Rules or otherwise, shall be undertaken in conformance with BMPs.

b) Project reviews are required of any land disturbing activity meeting the review thresholds set forth in Rule D Section 2.

c) In areas that drain to Impaired Waters, TMDL Implementation Plans may include site-specific requirements for any land-disturbing activities that are in addition to these rules and standards.

d) No person shall conduct land-disturbing activities without protecting adjacent property and waterbodies from erosion, sedimentation, flooding, or other damage.

e) Development shall be planned and conducted to minimize the extent of disturbed area, runoff velocities, and erosion potential, and to reduce and delay runoff volumes. Disturbed areas shall be stabilized and protected as soon as possible and facilities or methods used to retain sediment on-site.

f) Existing natural watercourses and vegetated soil surfaces shall be used to convey, store, filter, and retain runoff before discharge into public waters or a stormwater conveyance system.

g) Runoff from roof gutter systems shall discharge onto lawns or other pervious surfaces to promote infiltration where possible.

h) Use of fertilizers and pesticides in the shoreland protection zone shall be so done as to minimize runoff into public waters by the use of earth material, vegetation, or both. No phosphorus fertilizer shall be used unless a soil nutrient analysis shows a need for phosphorus or in the establishment of new turf.

i) When development density, topographic features, and soil and vegetation conditions are not sufficient to adequately handle runoff using natural features and vegetation, various types of constructed facilities such as diversions, settling basins, skimming

devices, dikes, waterways, and ponds may be used. The Commission encourages designs using surface drainage, vegetation and infiltration rather than buried pipes and man-made materials and facilities.

j) Whenever the Commission determines that any land disturbing activity has become a hazard to any person or endangers the property of another, adversely affects water quality or any waterbody, increases flooding, or otherwise violates these Rules, the Commission shall notify the member city where the problem occurs and the member city shall require the owner of the land upon which the land disturbing activity is located, or other person or agent in control of such land, to repair or eliminate such condition within the time period specified therein. The owner of the land upon which a land disturbing activity is located shall be responsible for the cleanup and any damages from sediment that has eroded from such land. The Commission may require the owner to submit a project review application under these Rules before undertaking any repairs or restoration.

RULE D. STORMWATER MANAGEMENT

1. POLICY. It is the policy of the Commission to control excessive rates and volumes of runoff by:

a) Requiring that peak runoff rates not exceed existing conditions or the capacity of downstream conveyance facilities or contribute to flooding or streambank erosion.

b) Managing subwatershed discharge rates and flood storage volumes to be consistent with the goals of the Commission's water resources management plan and the local water resources management plans.

c) Controlling runoff rates by the use of on-site or if feasible regional detention or infiltration facilities.

d) Reviewing stormwater management structures based on the 1% (100-year) critical storm event for the drainage area.

e) Routing runoff to water treatment ponds or other acceptable facilities before discharging into waterbodies.

f) Promoting the use of natural resources for storing runoff and improving water quality and other amenities where appropriate.

g) Promoting natural infiltration of runoff.

2. REGULATION. No person or political subdivision shall commence a land disturbing activity or the development or redevelopment of land for the following types of projects without first submitting to and obtaining approval of a project review from the Commission or the city in which the project is located that incorporates a stormwater management plan for the activity, development or redevelopment:

a) Plans of any land development or site development that disturbs more than 1 acre of land.

b) Linear projects that create one acre or more of new impervious surface must meet all Commission requirements for the net new impervious surface.

c) Plans of any land development or individual site development adjacent to or containing a lake, wetland, or a natural or altered watercourse as listed in the Hennepin County wetland inventory or the final inventory of Protected Waters and Wetlands for Hennepin County, as prepared by the DNR.

d) Any culvert installation or replacement, bridge construction, stream cross-section alteration, or activity requiring a DNR Waters Permit.

e) Plans for any land development or site development within the 1% chance (100-year) floodplain as defined by the Flood Insurance Study for the member city or the Commission's flood study.

f) Plans of any land development or site development regardless of size, if such review is requested by a member city.

g) Land disturbing activity that drains to more than one watershed, for that portion of the site draining into the Pioneer-Sarah Creek Watershed.

3. **CRITERIA**. Stormwater management plans shall comply with the following criteria regarding runoff rate restrictions, volume control requirements, and water quality requirements.

a) A hydrograph method based on sound hydrologic theory will be used to analyze runoff for the design or analysis of flows, volumes, water quality, and water levels.

b) *Runoff rates* for the proposed activity shall not exceed existing runoff rates for the 2-year, 10-year, and 100-year critical storm events and rainfall distribution for the project location as set forth in NOAA Atlas 14 Volume 8, published June 2013, or its successor, using the online NOAA Precipitation Frequency Data Server or a similar data source. Applicant must document the location and event depths used. If an approved local water management plan requires more restrictive rate control, then the more restrictive rate shall govern. Runoff rates may be restricted to less than the existing rates when necessary for the public health and general welfare of the watershed.

i) If detention basins are used to control rate of runoff they shall be designed to provide:

(1) An outlet structure to control the 2-year, 10-year, and 100-year critical storm events to predevelopment runoff rates. Said outlet structure will be required to control critical storm events to less than predevelopment runoff rates if downstream facilities have insufficient capacity to handle the increased flow.

(2) Alternative to (1), runoff may be directed to a downstream facility within the same hydrologic subwatershed that has sufficient capacity to provide the required rate control. This means that no rate control may be required for an individual development provided there is a regional facility designed and constructed to accommodate the flow from this property.

(3) An identified overflow spillway sufficiently stabilized to convey a 1% (100-year) critical storm event.

(4) A normal water elevation above the OHW of adjacent waterbodies.

(5) Access for future maintenance.

(6) An outlet skimmer to prevent migration of floatables and oils for at least the two year storm event.

(7) The low floor elevation shall be at minimum two feet above the critical event 100-year elevation and at minimum one foot above the emergency overflow elevation of nearby waterbodies and stormwater ponds.

ii) Regional detention basins may be used to manage peak flow rates and meet water quality objectives when feasible.

iii) Analysis of flood levels, storage volumes and flow rates for waterbodies and detention basins shall be based on the range of rainfall and snow melt duration producing the critical flood levels and discharges, whichever is most critical.

iv) Landlocked water basins may be provided with outlets that:

(1) Retain a hydrologic regime complying with floodplain and wetland alterations.

(2) Provide sufficient storage below the outlet run-out elevation to retain back-to-back 100-year, 24-hour rainfalls and runoff above the highest anticipated groundwater elevation and prevent damage to property adjacent to the basin.

(3) Do not create adverse downstream flooding or water quality conditions.

c) Stormwater runoff volume must be *infiltrated/abstracted* onsite in the amount equivalent to one point one inch (1.1”) of runoff generated from new impervious surface.

i) Applicant must minimize the creation of new impervious surface, reduce existing impervious surfaces where possible, and minimize the amount of directly connected impervious surface.

ii) When using infiltration for volume reduction, runoff must be infiltrated within 48 hours. Infiltration volumes and facility sizes shall be calculated based on the measured infiltration rate determined by a double-ring infiltrometer test(s) conducted to the requirements of ASTM Standard D3385 at the proposed bottom elevation of the infiltration area. Other testing methods may be used with the approval of the Commission’s Engineer. The measured infiltration rate shall be divided by the appropriate correction factor selected from the Minnesota

Stormwater Manual. This site investigation must be conducted by a licensed soil scientist or engineer.

iii) A post-construction percolation test must be performed on each infiltration practice and must demonstrate that the constructed infiltration rate meets or exceeds the design infiltration rate prior to project acceptance by the city.

iv) Infiltration areas will be limited to the horizontal areas subject to prolonged wetting.

v) Areas of permanent pools tend to lose infiltration capacity over time and will not be accepted as an infiltration practice.

vi) Stormwater runoff must be pretreated to remove solids before discharging to infiltration areas to maintain the long term viability of the infiltration areas.

vii) Design and placement of infiltration BMPs shall be done in accordance with the Minnesota Department of Health guidance "Evaluating Proposed Stormwater Infiltration Projects in Vulnerable Wellhead Protection Areas," as amended.

viii) Constructed bioretention and infiltration practices such as rain gardens, infiltration trenches, and infiltration benches shall not be used in:

(1) Fueling and vehicle maintenance areas;

(2) Areas with less than 3 feet separation from the bottom of the infiltration system to the elevation of seasonal high groundwater;

(3) Areas with runoff from industrial, commercial and institutional parking lots and roads and residential arterial roads with less than 5 feet separation distance from the bottom of the infiltration system to the elevation of seasonal high groundwater;

(4) Areas within 400 feet of a community water well, within 100 feet of a private well, or within a delineated 1-year time of travel zone in a wellhead protection area;

(5) Sites documented to contain contaminated soils or groundwater.

ix) Credit towards compliance with the abstraction requirement in (c) may be achieved by:

(1) Meeting post construction soil quality and amendment depth requirements. Areas that will be subjected to clearing, grading, or compaction that will not be covered by impervious surface, incorporated into a drainage facility, or engineered as structural fill or slope may be included in the credit calculation if they meet post construction soil quality and amendment depth requirements. Soil amendment areas become part of the site's storm drainage system, and must be protected by a utility and drainage easement and be included in the site's utility maintenance agreement. The applicant may compute a credit of 0.5 inches over the soil amendment area and apply that toward the abstraction volume requirement.

(a) A minimum 8-inch depth of compost amended soil or imported topsoil shall be placed in all areas of the project site being considered for the abstraction credit. Before the soil is placed, the subsoil must be scarified (loosened) at least 4 inches deep, with some incorporation of the amended soil into the existing subsoil to avoid stratified layers.

(b) Soil amendment may be achieved by either mixing 2 inches of approved compost into the 8 inches of soil depth, or by mixing a custom-calculated amount of compost to achieve 8 inches of uncompacted soil depth with a minimum organic content of five percent.

(c) The amended areas must pass a 12-inch probe test during the site final inspection, in accordance with the Commission's testing procedure. Once amended, soil areas must be protected from recompaction.

(2) Preserving undisturbed forest or grassland conservation areas. Conservation areas must remain undisturbed during construction and must be protected by a permanent conservation easement prescribing allowable uses and activities on the parcel and preventing future development. A long-term vegetation management plan describing methods of maintaining the conservation area in a natural vegetative condition must be submitted with the stormwater management plan. The applicant may compute a credit of 0.5 inches over the conservation area and apply that toward the abstraction volume requirement.

(3) Providing wetland buffers in excess of minimum requirements. Areas eligible for credit must meet all wetland buffer requirements, must be monumented and shown on the construction plans. The applicant may compute a credit of 0.5 inches over the excess buffer area and apply that toward the abstraction volume requirement.

(4) Disconnecting impervious surface by redirecting runoff across a pervious surface or into an engineered bioinfiltration facility. Impervious disconnection must be designed to prevent any reconnection of runoff with the storm drain system. The applicant may subtract the disconnected impervious surface area from the total impervious surface area used to compute the required abstraction volume.

x) Alternative to (c), runoff may be directed to a downstream facility within the same hydrologic subwatershed that has sufficient capacity to provide the required volume management. This means that no volume management may be required for an individual development provided there is a regional facility designed and constructed to accommodate the volume from this property.

d) Where infiltration is not advisable or infeasible due to site conditions, *biofiltration* must be provided for that part of the abstraction volume that is not abstracted by other BMPs. Where biofiltration is infeasible, at a minimum filtration through a medium that incorporates organic material, iron fillings, or other material to reduce soluble phosphorus must be provided.

e) There shall be *no net increase in total phosphorus (TP) or total suspended solids (TSS)* from pre-development land cover to post-development land cove. Pre-development land cover is defined as the predominant land cover over the previous 10 years. The TP and TSS export coefficients to be used to calculate predevelopment and post-development land use loadings are set forth in Commission project review guidance.

i) Full infiltration of one point one (1.1) inches of runoff from all impervious surface will satisfy (e).

ii) If it is not feasible to achieve the full 1.1 inch infiltration requirement, a combination of BMPs may be used to achieve the no-net-increase requirement.

iii) If permanent sedimentation and water quality ponds are used they shall be designed to the Wet Pond Design Standards set forth on Appendix A to these Rules and provide:

(1) Water quality features consistent with NURP criteria and best management practices.

(2) A permanent wet pool with dead storage of at least the runoff from a 2.5-inch storm event.

iv) Alternative to (e), runoff may be directed to a downstream facility within the same hydrologic subwatershed that has sufficient capacity to provide the required treatment. This means that no treatment may be required for an individual development provided there is a regional facility designed and constructed to accommodate the flow from this property.

4. WAIVERS.

a) The Commission may waive the on-site runoff rate, volume and water quality control design criteria as noted above, if a municipality has an off-site stormwater facility that provides equivalent control and treatment of runoff that conforms to Commission standards.

b) The design criteria for infiltration may be waived for sites with total impervious surface of less than one acre if infiltration BMPs have been incorporated to the maximum extent possible.

5. EXHIBITS. The following exhibits shall accompany the project review application (one set full size, one set reduced to a maximum size of 11" x 17", and one electronic set in pdf format). All plans must be signed by a licensed professional engineer registered in Minnesota.

a) Property lines and delineation of lands under ownership of the applicant.

b) Delineation of the subwatershed contributing runoff from off-site, proposed and existing subwatersheds on-site, emergency overflows and watercourses.

c) Proposed and existing stormwater facilities location, alignment and elevation.

d) Delineation of existing on-site wetland, marsh, shoreland and floodplain areas.

e) Where infiltration or filtration is used as a stormwater management practice, identification, description, results of double-ring infiltrometer tests, and permeability and approximate delineation of site soils and seasonal high groundwater elevation in both existing and proposed as-developed condition.

f) Existing and proposed ordinary high and 1% chance (100-year) water elevations on-site.

g) Existing and proposed site contour elevations at 2-foot intervals, referenced to NAVD (1988 datum). If NAVD 1988 is not used, applicant must specify the datum used and the appropriate conversion factor.

h) Construction plans and specifications of all proposed stormwater management facilities, including design details for outlet controls.

i) Runoff volume and rate analysis for the 2-year, 10-year, and 100-year critical storm events, existing and proposed.

j) Pre-construction and post-construction annual runoff volume (ac-ft), annual total phosphorus (lbs/yr), and annual total suspended solids (lb/yr).

k) All hydrologic, water quality and hydraulic computations made in designing the proposed stormwater management facilities.

l) A narrative describing the pre-and post-construction drainage conditions and the post-construction BMPs incorporated in the plans.

m) Applications requesting a soil management credit must include a Soil Management Plan (SMP) that shall include an 11” x 17” or larger site map indicating areas where soils will be amended, and calculations for soil volumes to be stockpiled and amounts and specifications of amendment or topsoil to be imported to achieve specified minimum organic matter content.

n) Delineation of any ponding, flowage or drainage easements, or other property interests, to be dedicated for stormwater management purposes.

6. **MAINTENANCE**. All stormwater management structures and facilities shall be maintained in perpetuity to assure that the structures and facilities function as originally designed. The owner of any water quality treatment device if not a governmental unit shall provide to the member city, in a form acceptable to the Commission, a recordable agreement detailing an operations and maintenance plan that assures that the structure(s) will be operated and maintained as designed.

7. **EASEMENTS**. The member city shall obtain from the applicant, in form acceptable to the Commission, recordable temporary and perpetual easements for ponding, flowage and drainage purposes over hydrologic features such as waterbodies, wetlands, buffers, floodplain and stormwater basins and other permanent BMPs. The easements shall include the right of reasonable access for inspection, monitoring, maintenance and enforcement purposes.

8. **COVENANTS**. The Commission may require as a condition of project review approval that the member city shall require that the land be subjected to restrictive covenants or a conservation easement, in form acceptable to the Commission, to prevent the future expansion of impervious surface and the loss of infiltration capacity.

RULE E. EROSION AND SEDIMENT CONTROL

1. **POLICY**. It is the policy of the Commission to control runoff and erosion and to retain or control sediment on land during land disturbing activities by requiring the preparation and implementation of erosion and sediment control plans.

2. **REGULATION**. No person or political subdivision shall commence a land disturbing activity or the development or redevelopment of land for which a project review is required under Rule D without first submitting to and obtaining approval of a project review from the Commission that incorporates an erosion and sediment control plan for the activity, development or redevelopment.

3. **CRITERIA**. Erosion and sediment control plans shall comply with the following criteria:

   a) Erosion and sediment control measures shall be consistent with best management practices as demonstrated in the most current version of the MPCA manual "Protecting Water Quality in Urban Areas," and shall be sufficient to retain sediment on-site.

   b) Erosion and sediment controls shall meet the standards for the General Permit Authorization to Discharge Storm Water Associated with Construction Activity Under the National Pollutant Discharge Elimination System/State Disposal System Permit Program Permit MN R100001 (NPDES General Construction Permit) issued by the Minnesota Pollution Control Agency, except where more specific requirements are required.

   c) All erosion and sediment controls shall be installed before commencing the land disturbing activity, and shall not be removed until completion.

   d) The activity shall be phased when possible to minimize disturbed areas subject to erosion at any one time.

4. **EXHIBITS**. The following exhibits shall accompany the project review application (one set full size, one set reduced to a maximum size of 11" x 17", and one electronic set in pdf format). Erosion and sediment control plans must be prepared by a qualified professional.

   a) An existing and proposed topographic map showing contours on and adjacent to the land, property lines, all hydrologic features, the proposed land disturbing activities, and the locations of all runoff, erosion and sediment controls and soil stabilization measures.

b) Plans and specifications for all proposed runoff, erosion and sediment controls, and temporary and permanent soil stabilization measures.

c) Detailed schedules for implementation of the land disturbing activity, the erosion and sediment controls, and soil stabilization measures.

d) Detailed description of the methods to be employed for monitoring, maintaining and removing the erosion and sediment controls, and soil stabilization measures.

e) Soil borings if requested by the Commission.

5. **MAINTENANCE**. The project review applicant shall be responsible for proper operation and maintenance of all erosion and sediment controls and soil stabilization measures, in conformance with best management practices and the NPDES permit. The project review applicant shall, at a minimum, inspect and maintain all erosion and sediment controls and soil stabilization measures daily during construction, weekly thereafter, and after every rainfall event exceeding 0.5 inches, until vegetative cover is established.

RULE F. FLOODPLAIN ALTERATION

1. **POLICY**. It is the policy of the Commission to prevent and control flooding damage by:

a) Preserving existing water storage capacity below the 100-year critical flood elevation on all waterbodies in the watershed to minimize the frequency and severity of high water.

b) Minimizing development in the floodplain that will unduly restrict flood flows or aggravate known high water problems.

c) Requiring compensatory storage for floodplain fill.

2. **REGULATION**. No person or political subdivision shall alter or fill land below the 100-year critical flood elevation of any public waters watercourse, public waters wetland, or other wetland without first obtaining an approved project review from the Commission.

3. **CRITERIA**.

a) Floodplain alteration or filling shall not cause a net decrease in flood storage capacity below the projected 1% (100-year) critical flood elevation or alter the timing of flooding unless it is shown that the proposed alteration or filling, together with the alteration or filling of all other land on the affected reach of the waterbody to the same degree of encroachment as proposed by the applicant, will not cause high water or aggravate flooding on other land and will not unduly restrict flood flows.

b) All new structures shall be constructed with the low floor at the elevation required in the municipality's ordinance, however, in no case shall the low floor be less than two feet above the regulatory elevation.

4. **EXHIBITS**. The following exhibits shall accompany the project review` application (one set full size, one set reduced to a maximum size of 11" x 17", and one electronic set in pdf format):

a) Site plan showing boundary lines, delineation and existing elevation contours of the work area, ordinary high water level, and 1% (100-year) critical flood elevation. All elevations shall be referenced to the NAVD 1988 datum. If NAVD 1988 is not used, applicant must specify the datum used and the appropriate conversion factor.

b) Grading plan showing any proposed elevation changes.

c) Preliminary plat of any proposed subdivision.

d) Determination by a registered professional engineer of the 100-year critical flood elevation before and after the proposed activity.

e) Computation of the change in flood storage capacity as a result of the proposed alteration or fill.

f) Erosion and sediment control plan which complies with these Rules.

g) Soil boring logs and report if available.

5. **EXCEPTIONS**. If a municipality has adopted a floodplain ordinance that prescribes an allowable degree of floodplain encroachment, the applicable ordinance shall govern the allowable degree of encroachment and no project review will be required under this Floodplain Alteration Rule.

RULE G. WETLAND ALTERATION

1. **POLICY**. It is the policy of the Commission to preserve and protect wetlands for their water quality, stormwater storage, habitat, aesthetic, and other attributes by:

a) Achieving no net loss in the quantity, quality and biological diversity of wetlands in the watershed.

b) Increasing the quantity, quality and biological diversity of wetlands in the watershed by restoring or enhancing diminished or drained wetlands.

c) Enforcing mitigation of direct or indirect impacts from activities that destroy or diminish the quantity, quality and biological diversity of watershed wetlands.

d) Replacing affected wetlands where sequencing demonstrates that avoidance is not feasible.

2. **REGULATION**. No person or political subdivision shall drain, fill, excavate or otherwise alter a wetland without first obtaining the approval of a wetland replacement plan from the local government unit with jurisdiction over the activity. Mitigation of wetland impacts will be considered in the following sequence: 1) mitigated by enhancing the

impacted wetland; 2) mitigated within the subcatchment of the impacted wetland; 3) mitigated in the drainage area of the impacted wetland; 4) mitigated in the watershed of the impacted wetland; 5) mitigated through purchase of wetland bank credits.

3. CRITERIA.

a) Any drainage, filling, excavation or other alteration of a wetland shall be conducted in compliance with Minnesota Statutes, section 103G.245, the Wetland Conservation Act, and regulations adopted thereunder.

b) A wetland may be used for stormwater storage and treatment only if pre-treatment is provided and the use will not adversely affect the function and public value of the wetland as determined by the local government unit.

c) Other activities which would change the character of a wetland shall not diminish the quantity, quality or biological diversity of the wetland.

4. LOCAL GOVERNMENT UNIT. The Commission will serve as the local government unit (LGU) for administration of the Wetland Conservation Act (WCA) for those cities that have designated the Commission to serve in that capacity. If a member city has not designated the Commission as the LGU for the administration of the WCA, they shall be responsible for administering the WCA. MnDOT serves as the LGU on its right of way.

RULE H. BRIDGE AND CULVERT CROSSINGS

1. POLICY. It is the policy of the Commission to maintain channel profile stability and conveyance capacity by regulating crossings of watercourses for driveways, roads and utilities.

2. REGULATION. No person or political subdivision shall construct or improve a road, driveway or utility crossing across any public waters watercourse or county ditch without first submitting to the Commission and receiving approval of a project review.

3. CRITERIA. Crossings shall:

a) Retain adequate hydraulic capacity to pass the 100-year flow and maintain the 100-year flow profile, if available.

b) Mimic the existing base flow (1-year, 2-year) conditions.

c) Not adversely affect water quality.

d) Represent the "minimal impact" solution to a specific need with respect to all reasonable alternatives.

e) Allow for future erosion, scour, and sedimentation maintenance considerations.

f) If the project proposes changing the FEMA FIS profile,, a FEMA map revision must be obtained.

g) If the project requires a DNR Work in Public Waters permit, the conditions of that permit must be satisfied.

4. **EXHIBITS**. The following exhibits shall accompany the project review application (one set full size, one set reduced to a maximum size of 11" x 17", and one electronic set in pdf format):

a) Construction plans and specifications.

b) Analysis prepared by a registered professional engineer showing the effect of the project on hydraulic capacity and water quality.

c) An erosion and sediment control plan that complies with these Rules.

5. **MAINTENANCE**.

a) The maintenance, reconstruction and stabilization of any public crossing shall be the responsibility of the political subdivision with jurisdiction over the crossing.

b) The maintenance, reconstruction and stabilization of any private crossing shall be the responsibility of the owner of the crossing.

c) If a crossing over any public waters watercourse is determined by the Commission to be causing significant erosion, the Commission may notify the member city where said crossing is located and the member city may order the owner of the crossing to make necessary repairs or modifications to the crossing and outlet channel.

RULE I. BUFFER STRIPS

1. **POLICY**. It is the policy of the Commission to maintain the water quality and ecological functions provided by watercourses and wetlands by requiring the development of vegetated buffers around watercourses, lakes and wetlands where development and redevelopment occurs, and to encourage the installation of vegetated buffers around all watercourses and wetlands. Vegetative buffers reduce the impact of surrounding development and land use on watercourse, lake and wetland functions by stabilizing soil to prevent erosion, filtering sediment from runoff, and moderating water level fluctuations during storms. Buffers provide essential habitat for wildlife. Requiring buffers recognizes that watercourse, lake and wetland quality and function are related to the surrounding upland.

2. **REGULATION**. No person or political subdivision shall commence a land disturbing activity or the development or redevelopment of land for which a project review is required under Rule D on land that contains or is adjacent to a watercourse, lake or wetland

without first submitting to and obtaining approval of a project review from the Commission that incorporates a vegetated buffer strip between the development or redevelopment and the watercourse or wetland.

3. GENERAL PROVISIONS.

a) This Rule shall apply to all lands containing or abutting watercourses, lakes or wetlands that are subject to a project review under these Rules. Watercourses, lakes and wetlands shall be subject to the requirements established herein, and other applicable federal, state and local ordinances and regulations. If a municipality has a buffer strip requirement that has been reviewed and approved by the Commission, the municipal regulation shall have precedence over the Commission's Rules.

b) An applicant shall determine whether any watercourse, lake or wetland exists, and shall delineate the boundary for any wetland on the land. An applicant shall not be required to delineate wetlands on adjacent property, but must review available information to estimate the wetland boundary.

c) Documentation identifying the presence of any watercourse, lake or wetland on the applicant’s land, including wetland delineation and buffer strip vegetation evaluation, must be provided to the Commission with a project review application.

d) Wetland and buffer strip identifications and delineations shall be prepared in accordance with state and federal regulations.

4. CRITERIA. The following standards apply to all lands that contain or abut a watercourse, lake or wetland:

a) BMPs shall be followed to avoid erosion and sedimentation during land disturbing activities.

b) When a buffer strip is required the applicant shall, as a condition to issuance of an approved project review:

i) Submit to the member city, in a form acceptable to the Commission, a recordable conservation easement for protection of approved buffer strips. The easement shall describe the boundaries of the watercourse or wetland and buffer strips, identify the monuments and monument locations, and prohibit any of the alterations set forth in Paragraph 5(e) below and the removal of the buffer strip monuments within the buffer strip or the watercourse or wetland.

ii) Submit to the member city, in a form acceptable to the Commission, an executed buffer maintenance plan and agreement for the first two growing seasons following establishment, and providing an escrow or an alternate surety to assure successful vegetation establishment.

iii) Install the wetland monumentation required by Paragraph 7 below.

c) All open areas within the buffer strip shall be seeded or planted in accordance with Paragraph 8 below. All seeding or planting shall be completed prior to removal of any erosion and sediment control measures. If construction is completed after the end of the growing season, erosion and sediment control measures shall be left in place and all disturbed areas shall be mulched for protection over the winter season.

5. BUFFER STRIPS.

a) A buffer strip shall be maintained around the perimeter of all watercourses, lakes or wetlands. The buffer strip provisions of this Rule shall not apply to any parcel of record as of the date of this Rule until such parcel is developed or redeveloped or unless required by a previous project review. The Commission does, however, strongly encourage the installation of buffer strips on all parcels in the watershed.

b) Buffer strips on watercourses, lakes, and wetlands shall be an average 25 feet wide and a minimum of 10 feet wide. It is recommended that all structures have a minimum 15 foot setback from the buffer strip.

c) Buffer strips shall apply whether or not the watercourse or wetland is on the same parcel as a proposed development.

d) Buffer areas disturbed by grading operations must be finish graded to a slope of 6:1 or less or an increase in width of five (5) feet for each one (1) foot decrease in horizontal width (i.e., a 25 required foot buffer width at a 5:1 slope must be 30 feet wide, 4:1 must be 35 feet wide, and 3:1 must be 40 feet wide.)

e) Buffer strip vegetation shall be established and maintained in accordance with Paragraph 8 below. Buffer strips shall be identified within each parcel by permanent monumentation in accordance with Paragraph 7 below.

f) Subject to Paragraph 5(g) below, alterations including building, storage, paving, mowing, plowing, introduction of noxious vegetation, cutting, dredging, filling, mining, dumping, grazing livestock, agricultural production, yard waste disposal or fertilizer application, are prohibited within any buffer strip. Noxious vegetation shall be removed to meet state standards. Alterations would not include plantings that enhance the natural vegetation or selective clearing or pruning of trees or vegetation that are dead, diseased or pose similar hazards.

g) The following activities shall be permitted within any buffer strip, and shall not constitute prohibited alterations under Paragraph 5(f) above:

   i) Use and maintenance of an unimproved access strip through the buffer, not more than 20 feet in width, for recreational access to the watercourse, lake or wetland and the exercise of riparian rights.

   ii) Placement, maintenance, repair or replacement of utility and drainage systems that exist on creation of the buffer strip or are required to comply with any subdivision approval or building permit obtained from the municipality or county,

so long as any adverse impacts of utility or drainage systems on the function of the buffer strip have been avoided or minimized to the extent possible.

iii) Construction, maintenance, repair, reconstruction, or replacement of existing and future public roads crossing the buffer strip, so long as any adverse impacts of the road on the function of the buffer strip have been avoided or minimized to the extent possible.

6. ALTERNATE WETLAND PROTECTION METHODS.

a) Should application of the buffer standards in Paragraph 5 above render a parcel of record as of the date of this Rule unbuildable based on current city ordinances, the Watershed engineer may allow alternative methods to protect the wetland. Such methods must include a buffer strip no less than ten feet wide, supplemented by redirection of drainage to a wider area of buffer, or to a Best Management Practice such as a rain garden or vegetated swale.

b) The use of alternative wetland protection methods will be evaluated as part of the review of a stormwater management plan under these Rules. Alternative wetland protection methods must be in keeping with the spirit and intent of this Rule.

7. MONUMENTATION. A monument shall be required at each parcel line where it crosses a buffer strip and shall have a maximum spacing of 200 feet along the edge of the buffer strip. Additional monuments shall be placed as necessary to accurately define the edge of the buffer strip. A monument shall consist of a post and a buffer strip sign meeting Commission standards. The signs shall include warnings about mowing, disturbing or developing the buffer strip.

8. VEGETATION.

a) Where acceptable natural vegetation exists in buffer strip areas, the retention of such vegetation in an undisturbed state is required unless an applicant receives approval to replace such vegetation. A buffer strip has acceptable natural vegetation if it:

i) Has a continuous, dense layer of native vegetation that has been uncultivated or unbroken for at least 5 consecutive years; or

ii) Has an overstory of native trees and/or shrubs that has been uncultivated or unbroken for at least 5 consecutive years; or

iii) Contains a mixture of the plant communities described in Subparagraphs 8(a)(i) and (ii) above that has been uncultivated or unbroken for at least 5 years.

b) Notwithstanding the performance standards set forth in Paragraph 8(a), the Commission may determine existing buffer strip vegetation to be unacceptable if:

i) It contains undesirable plant species including but not limited to common buckthorn, reed canary grass, or species on the Minnesota State Noxious Weeds List; or

ii) It has topography that tends to channelize the flow of runoff; or

iii) For some other reason it is unlikely to retain nutrients and sediment.

iv) Where buffer strips are not vegetated or have been cultivated or otherwise disturbed within 5 years of the project review application, such areas shall be replanted and maintained with native vegetation. The buffer strip plantings must be identified on the project review application. Acceptable buffer strip design and planting methods are detailed in the reference document "Restoring and Managing Native Wetland and Upland Vegetation" (Jacobson 2006, prepared for BWSR and MnDOT).

c) Buffer strip vegetation shall be established and maintained in accordance with the requirements found in this Paragraph. During the first two full growing seasons, the owner must replant any buffer strip vegetation that does not survive. The owner shall be responsible for reseeding and/or replanting if the buffer strip changes at any time through human intervention or activities. At a minimum the buffer strip must be maintained as a "no mow" area.

9. ENCROACHMENT.

a) Buffer strips must be kept free of all materials, equipment and structures, including fences and play equipment. Buffer strips must not be grazed, cropped, logged or mown except as approved by the Commission. The topography of the buffer strips shall not be altered by any means, including paving, plowing, cutting, dredging, filling, mining, or dumping.

b) Variances.

i) Only variances meeting the standards and criteria set forth in Rule K shall be granted.

ii) Variances shall not be granted that would circumvent the intent and purposes of this Rule.

RULE J. FEES

1. POLICY. The Commission finds that it is in the public interest to require applicants to pay the cost of administering and reviewing project review applications, and inspecting approved activities to assure compliance with these Rules, rather than using the Commission's annual administrative levy for such purposes. The Commission shall by resolution establish a schedule of fees that may be amended from time to time to reflect the cost of providing each service.

2. APPLICATION. Each application for the issuance, transfer or renewal of a project review recommendation under these Rules shall be accompanied by an application fee to defray the cost of processing the application.

3. **REVIEW**. A project review applicant under these Rules shall pay a fee for the cost of the review and analysis of the proposed activity, including services of engineering, legal, and other consultants. The review fee shall be payable upon the submission of the project review application.

4. **WETLAND MITIGATION PLAN**. A project review applicant under these rules shall pay a fee for the cost of the review and analysis of a proposed activity involving a wetland mitigation plan in a municipality where the Commission is the LGU. The fee is to cover the costs of engineering, legal, and other consultants and shall be payable upon the submission of the project review application. Should the cost of said wetland mitigation plan review exceed the review fee, the application shall deposit such additional sums as are needed to pay such costs. Failure to pay such costs is grounds to deny the application or suspend review.

5. **WETLAND MITIGATION PLAN MONITORING**. A project review applicant under these rules in a municipality where the Commission is the LGU shall deposit an escrow to cover the cost of Commission monitoring and annual monitoring plan review for the five-year period. If the escrow amount is insufficient to cover the costs the Commission may require additional funds from the applicant.

6. **WETLAND MITIGATION SECURITY DEPOSIT**. A project review applicant under these rules in a municipality where the Commission is the LGU shall provide a security to assure that the replacement plan is followed. The amount of the security shall be calculated on a case-by-case basis based on the estimated cost of construction, follow up and contingency. The security may also include an amount determined by the Commission to be sufficient to protect the public in the event the replacement plan does not succeed.

7. **DEPOSITS**. The Commission will maintain an accounting for all deposits made under this Rule. No interest will be paid to applicants for funds held in deposit.

RULE K. VARIANCES

1. **WHEN AUTHORIZED**. The Commission may grant variances from the literal provisions of these Rules. A variance shall only be granted when in harmony with the general purpose and intent of the Rules in cases where strict enforcement of the Rules will cause practical difficulties or particular hardship, and when the terms of the variance are consistent with the Commission's water resources management plan and Minnesota Statutes, chapter 103D.

2. **HARDSHIP**. "Hardship" as used in connection with the granting of a variance means the land in question cannot be put to a reasonable use if used under the conditions allowed by these Rules; the plight of the applicant is due to circumstances unique to the land and

not created by the applicant; and the variance, if granted, will not adversely affect the essential character of the locality and other adjacent land. Economic considerations alone shall not constitute a hardship if a reasonable use for the land exists under the terms of these Rules. Conditions may be imposed in the granting of a variance to insure compliance and to protect adjacent land and the public health and general welfare of the Commission.

3. **PROCEDURE**. An application for a variance shall describe the practical difficulty or particular hardship claimed as the basis for the variance. The application shall be accompanied with such surveys, plans, data and other information as may be required by the Commission to consider the application.

4. **VIOLATION**. A violation of any condition imposed in the granting of a variance shall be a violation of these Rules and shall automatically terminate the variance.

RULE L. ENFORCEMENT

1. **ADMINISTRATION**. These Rules shall be administered by the Commission. The Commission shall consider applications required under these Rules and determine whether such applications should be approved, approved with conditions, or denied. Such determination shall be communicated to the member city in which the project lies and to the applicant.

2. **IMPLEMENTATION BY MEMBER CITIES**. It shall be the duty of each city to enforce and implement such determinations by the Commission under the various permitting processes and regulations of the city. Each city shall make such amendments to its official controls, regulations, and permitting processes as are necessary to provide it with the authority to enforce and implement the determinations of the Commission.

3. **FAILURE BY CITY TO IMPLEMENT**. Upon a determination by the Commission that a city has not enforced or implemented a decision of the Commission in the administration of these Rules, the Commission shall notify the city of such determination and direct that appropriate action be taken by the city. If the city does not take such action, the Commission may take such legal steps as are available to it to effect such enforcement or implementation.

RULE M. AMENDMENT OF THESE RULES

1. **AMENDMENT.** These rules may be amended from time to time by the Commission. Proposed amendments shall be reviewed by the member cities prior to adoption unless the Commission determines that said amendment is of a minor or technical nature. Minor or technical amendments include recodifying or streamlining the rules, clarifying

policies, or other actions that do not adversely affect a member city or impact the Commission's or member cities' ability to meet their water management plan goals.

2. **PROCEDURE.** Proposed major amendments to these rules shall be first considered by the Commission and then forwarded to the member cities for a 45-day comment period. Following that comment period, the Commission shall consider the proposed amendment and the comments received for approval. All amendments shall be made by resolution.

PIONEER-SARAH CREEK WATERSHED MANAGEMENT COMMISSION
RULES APPENDIX A
WET POND DESIGN STANDARDS

Permanent Pool Depth	Average 4', maximum 10'
Permanent Pond Surface Area	Greater of 2% of watershed's impervious area and 1% of the watershed
Permanent Pool Length to Width Ratio	3:1 or greater with an irregularly shaped shoreline
Side Slopes	10:1 for 10-foot bench centered on the normal water elevation and between 3:1 and 20:1 elsewhere
Side Slope Stabilization	Native seed with mix 33-261 (MnDOT 310), 34-271 (BWSR W2) or equivalent between NWL and HWL, provide 10' buffer where possible with mix 35-221 (MnDOT 330 (dry)) or mix 35-241 (MnDOT 350 (mesic))
Floatable Removal	Skimming device discharging at no greater than 0.5 fps during the 2-year event or a submerged outlet with a minimum 0.5 feet from the normal water level to the crown of the outlet pipe
Sediment Accumulation Area	Provide maintenance pads to remove sediment deltas at inlets
Permanent Pool Volume	A 4-foot mean depth and equal to 2.5-inch rain over the watershed
Source	Protecting Water Quality in Urban Areas (MPCA 2000)

SUMMARY

Pioneer-Sarah Creek Watershed Management Commission
Management Rules and Standards*

	Standard	Purpose	Applicability
Project Reviews Required	A Stormwater Management Plan consistent with all applicable management rules and standards* must be reviewed and approved prior to commencement of land disturbing activities.	To control excessive rates and volumes of runoff; manage subwatershed discharge rates and flood storage volumes; improve water quality; protect water resources; and promote natural infiltration of runoff.	All development or redevelopment projects of the following types: • Projects disturbing more than one acre of land • Projects within the 100-year floodplain • Projects adjacent to or within a lake, wetland, or watercourse • Any land disturbing activity requested by a member city to be reviewed regardless of project size • Linear projects creating more than one acre of new impervious surface
Rate Control	Peak runoff rates may not exceed existing rates for the 2-year, 10-year, and 100-year critical storm event; or the capacity of downstream conveyance facilities; or contribute to flooding	To control excessive rates and volumes of runoff; manage subwatershed discharge rates and flood storage volumes	All projects disturbing more than one acre of land. Redevelopment projects disturbing less than 50 percent of the site must meet the requirement only for the disturbed area.
Volume Manage-ment	1.1 inch of impervious surface runoff must be abstracted on site within 48 hours	To control excessive rates and volumes of runoff; manage discharge rates and flood storage volumes; protect stream channels from erosion; and promote natural infiltration of runoff.	All projects disturbing more than one acre of land. Redevelopment projects disturbing less than 50 percent of the site must meet the requirement only for the disturbed area.
Erosion and Sediment Control	Erosion control plan using Best Management Practices (BMPs) and consistent with the NPDES General Construction Permit is required	To control erosion and sediment so as to protect conveyance systems and water quality	All projects requiring a project review
Floodplain Alteration	Compensating storage is required to mitigate floodplain fill	To prevent and control flooding damage	All development or redevelopment projects within the 100-year floodplain regardless of project size
Water Quality	No net increase in total phosphorus and total suspended sediment annual load	To protect water quality	All projects disturbing more than one acre of land. Redevelopment projects disturbing less than 50 percent of the site must meet the requirement only for the disturbed area.
Buffer Strips	Vegetated buffer strips average 25 foot, minimum 10 foot wide adjacent to lakes, wetlands and other watercourses	To protect water quality; reduce erosion and sedimentation; reduce pollutants from runoff and debris; and provide habitat	All projects requiring a project review that contain or abut a wetland or watercourse
Wetland	Wetlands may not be drained, filled, excavated, or otherwise altered without an approved wetland replacement plan from the local government unit (LGU) with jurisdiction	To preserve and protect wetlands for their water quality, stormwater storage, habitat, aesthetic, and other attributes	All land disturbing activity impacting a wetland as defined by the Wetland Conservation Act (WCA)

*Important Note: Approved TMDL Implementation Plans may have additional site-specific requirements.

Elm Creek
Watershed Management Commission

Rules and Standards

Adopted: October 8, 2014

Effective: January 1, 2015

Revised: October 14, 2015

ELM CREEK
WATERSHED MANAGEMENT COMMISSION
RULES AND STANDARDS

POLICY STATEMENT

The Elm Creek Watershed Management Commission is a Joint Powers Association of the State under the Minnesota Watershed Act, and a watershed management organization as defined in the Metropolitan Surface Water Management Act. These acts provide the Commission with power to accomplish its statutory purpose: the conservation, protection, and management of water resources in the boundaries of the watershed through sound scientific principles. The Commission has adopted a water resources management plan pursuant to the Acts. These Rules implement the plan's principles and objectives.

Land alteration and utilization can affect the rate and volume and degrade the quality of surface water runoff. Sedimentation from ongoing erosion and construction activities can reduce hydraulic capacity of waterbodies and degrade water quality. Water quality problems already exist in many waterbodies in the watershed. Most of these waterbodies have been designated by the State of Minnesota as Impaired Waters, and do not meet state water quality standards.

Activities that increase the rate or volume of stormwater runoff will aggravate existing flooding problems and contribute to new ones. Activities that degrade runoff quality will cause quality problems in receiving water. Activities that fill floodplain or wetland areas will reduce flood storage and hydraulic capacity of waterbodies, and will degrade water quality by eliminating the filtering capacity of such areas.

These Rules and Standards protect the public health, welfare, and natural resources of the watershed by regulating the alteration of land and waters in the watershed to 1) reduce the severity and frequency of high water, 2) preserve floodplain and wetland storage capacity, 3) improve the chemical and physical quality of surface waters, 4) reduce sedimentation, 5) preserve the hydraulic and navigational capacities of waterbodies, 6) promote and preserve natural infiltration areas, and 7) preserve natural shoreline features. In addition to protecting natural resources, these Rules and Standards are intended to minimize future public expenditures on problems caused by land and water alterations.

RELATIONSHIP WITH MUNICIPALITIES AND COUNTY

The Commission recognizes that the control and determination of appropriate land use is the responsibility of the municipalities. The Commission will review projects involving land-disturbing activities in accordance with these Rules and Standards. The Commission intends to be active in the regulatory process to ensure that water resources are managed in accordance with its goals and policies.

The Commission desires to provide technical advice to the municipalities in the preparation of local stormwater management plans and the review of projects that may affect water resources prior to investment of significant public or private funds.

RULE A. DEFINITIONS

For the purposes of these Rules, unless the context otherwise requires, the following words and terms shall have the meanings set forth below. References in these Rules to specific sections of the Minnesota Statutes or Rules include amendments, revisions or recodifications of such sections. The words "shall" and "must" are mandatory; the word "may" is permissive.

100 Year Event. The rainfall depth with a 1 percent chance of occurring in a given year.

Abstraction. Removal of stormwater from runoff, by such methods as infiltration, evaporation, transpiration by vegetation, and capture and reuse, such as capturing runoff for use as irrigation water.

Agricultural Activity. The use of land for the production of agronomic, horticultural or silvicultural crops, including dairy animals, food animals, nursery stock, sod, fruits, vegetables, flowers, cover crops, grains, Christmas trees, and for grazing.

Alteration or Alter. When used in connection with public waters or wetlands, any activity that will change or diminish the course, current, or cross-section of public waters or wetlands.

Applicant. Any person or political subdivision that submits an application to the Commission for a project review under these Rules.

Best Management Practices (BMPs). Techniques proven to be effective in controlling runoff, erosion and sedimentation including those documented in the Minnesota Construction Site Erosion and Sediment Control Planning Handbook (BWSR 1988), Protecting Water Quality in Urban Areas (MPCA 2000), and the Minnesota Stormwater Manual (MPCA 2005) as revised.

Biofiltration. Using living material to capture and/or biologically degrade or process pollutants prior to discharging stormwater, such as directing runoff through a vegetated buffer or to a rain garden or vegetated basin with an underdrain.

Bioretention. A terrestrial-based (upland, as opposed to wetland) water quality and water quantity control process. Bioretention employs a simplistic, site-integrated design that provides opportunity for runoff infiltration, filtration, storage and water uptake by vegetation.

Buffer Strip. An area of natural, unmaintained, vegetated ground cover abutting or surrounding a watercourse or wetland.

BWSR. The Minnesota Board of Water and Soil Resources.

Commission. The Elm Creek Watershed Management Commission.

Commissioners. The Board of Commissioners of the Elm Creek Watershed Management Commission.

Compensatory Storage. Excavated volume of material below the floodplain elevation required to offset floodplain fill.

County. Hennepin County, Minnesota.

Dead Storage. The permanent pool volume of a water basin or the volume below the runout elevation of a water basin.

Detention Basin. Any natural or manmade depression for the temporary storage of runoff.

Development. Any proposal to subdivide land, any land-disturbing activity or creation of impervious surface.

Directly Connected Impervious Surface. Any hard surface (rooftop, driveway, sidewalk, roadway, etc.) from which runoff is not subject to loss beyond initial abstraction before being routed to the downstream collection and conveyance system.

Disturbance. See Land Disturbing Activity.

Drain or Drainage. Any method for removing or diverting water from waterbodies, including excavation of an open ditch, installation of subsurface drainage tile, filling, diking, or pumping.

Erosion. The wearing away of the ground surface as a result of wind, flowing water, ice movement, or land disturbing activities.

Erosion and Sediment Control Plan. A plan of BMPs or equivalent measures designed to control runoff and erosion and to retain or control sediment on land during the period of land disturbing activities in accordance with the standards set forth in these Rules.

Excavation. The artificial removal of soil or other earth material.

Fill. The deposit of soil or other material by artificial means.

Filtration. A process by which stormwater runoff is captured, temporarily stored, and routed through a filter bed to improve water quality and slow down stormwater runoff.

Floodplain. The area adjacent to a waterbody that is inundated during a 1% chance (100-year) flood as defined by the FEMA Flood Insurance Study for the member city or the Commission's flood study.

Impaired Water. A waterbody that does not meet state water quality standards and that has been included on the MPCA Section 303(d) list of Impaired Waters of the state.

Impervious Surface. A surface compacted or covered with material so as to be highly resistant to infiltration by runoff. Impervious surface shall include roads, driveways and parking areas,

whether or not paved, sidewalks greater than 3 feet wide, patios, tennis and basketball courts, swimming pools, covered decks and other structures. Open decks with joints at least ¼ inch wide, areas beneath overhangs less than 2 feet wide, and sidewalks 3 feet or less wide shall not constitute impervious surfaces under these Rules.

Infiltration. The passage of water into the ground through the soil.

Infiltration Area. Natural or constructed depression located in permeable soils that capture, store and infiltrate the volume of stormwater runoff associated with a particular design event.

Interested Party. A person or political subdivision with an interest in the pending subject matter.

Land Disturbing Activity. Any change of the land surface to include removing vegetative cover, excavation, fill, grading, and the construction of any structure that may cause or contribute to erosion or the movement of sediment into waterbodies. The use of land for agricultural activities, or improvements such as mill and overlay or concrete rehabilitation projects that do not disturb the underlying soil shall not constitute a land disturbing activity under these Rules.

Landlocked Basin. A basin that is 1 acre or more in size and does not have a natural outlet at or below the 1% chance (100-year) flood elevation as determined by the 1% chance (100-year), 10-day runoff event.

Low Floor. The finished surface of the lowest floor of a structure.

Member City. Any city wholly or partly within the Commission's boundary that has executed the Joint Powers Agreement.

MnDOT. The Minnesota Department of Transportation.

MPCA. The Minnesota Pollution Control Agency.

Municipality. Any city wholly or partly within the Commission's boundary.

NPDES. National Pollutant Discharge Elimination System.

NURP. The Nationwide Urban Runoff Program developed by the Environmental Protection Agency to study stormwater runoff from urban development.

Ordinary High Water Level (OHW). The elevation delineating the highest water level which has been maintained for a sufficient period of time to leave evidence upon the landscape, commonly that point where the natural vegetation changes from predominantly aquatic to predominantly terrestrial. For watercourses, the OHW level is the elevation of the top of the bank of the channel. An OHW established for a waterbody by the Minnesota Department of Natural Resources will constitute the OHW under this definition.

Owner. The owner of a parcel of land or the purchaser under a contract for deed.

Parcel. A parcel of land designated by plat, metes, and bounds, registered land survey, auditor's subdivision, or other accepted means and separated from other parcels or portions by its designation.

Person. Any individual, trustee, partnership, unincorporated association, limited liability company or corporation.

Political Subdivision. A municipality, county or other political division, agency or subdivision of the state.

Project. A space, parcel, or parcels of real property owned by one or more than one person which is being or is capable of being developed or redeveloped as a single project.

Public Health and General Welfare. Defined in Minnesota Statutes, Section 103D.011, Subdivisions 23 and 24.

Public Waters. Any waters as defined in Minnesota Statutes, Section 103G.005, Subdivision 15.

Public Waters Wetland. Any wetland as defined in Minnesota Statutes, Section 103G.005, Subdivision 15a.

Redevelopment. Any proposal to re-subdivide land, or any land-disturbing activity or addition of impervious surface to a developed site.

Runoff. Rainfall, snowmelt or irrigation water flowing over the ground surface.

Sediment. Soil or other surficial material transported by surface water as a product of erosion.

Sedimentation. The process or action of depositing sediment.

Shoreland Protection Zone. Land located within a floodplain or within 1,000 feet of the OHW of a public water or public waters wetland or 300 feet of a public waters watercourse.

Site. A space, parcel, or parcels of real property owned by one or more than one person which is being or is capable of being developed or redeveloped as a single project.

Standard. A required level of quantity, quality, or value.

Stormwater Management Plan. A plan for the permanent management and control of runoff prepared and implemented in accordance with the standards set forth in these Rules.

Structure. Anything manufactured, constructed or erected which is normally attached to or positioned on land, including portable structures, earthen structures, walls, roads, water and storage systems, drainage facilities and parking lots.

Subdivision or Subdivide. The separation of a parcel of land into two or more parcels.

TMDL. A Total Maximum Daily Load is the maximum amount of a pollutant that a waterbody can receive and still meet water quality standards. "TMDL" can also refer to a study that calculates that load, or to the allocation of that allowable load to its various sources. An Implementation Plan may be part of the TMDL study or it may be a separate document that sets forth the steps that will be taken to achieve the TMDL.

Volume Management. The retention and abstraction of a certain volume of stormwater runoff onsite through techniques such as infiltration, evapotranspiration, and capture and reuse.

Water Basin. An enclosed natural depression with definable banks capable of containing water that may be partly filled with public waters.

Waterbody. All water basins, watercourses and wetlands as defined in these Rules.

Watercourse. Any natural or improved stream, river, creek, ditch, channel, culvert, drain, gully, swale, or wash in which waters flow continuously or intermittently in a definite direction.

Water Resources Management Plan. The watershed management plan for the Commission adopted and implemented in accordance with Minnesota Statutes, Section 103B.231.

Watershed. Region draining to a specific watercourse or water basin.

Wetland. Land transitional between terrestrial and aquatic systems as defined in Minnesota Statutes, Section 103G.005, Subdivision 19.

Wetland Conservation Act (WCA). Minnesota Wetland Conservation Act of 1991 as amended.

RULE B. PROCEDURAL REQUIREMENTS

1. **APPLICATION REQUIRED**. Any person or political subdivision undertaking an activity for which a project review is required by these Rules shall first submit to the Commission a project review application, design data, plans, specifications, fees, and such other information and exhibits as may be required by these Rules. Applications shall be signed by the owner, or the owner's authorized agent, except for activities of a political subdivision which may be signed by either the owner or the general contractor. All project review applications must be authorized by the municipality where the proposed project is located.

2. **FORMS**. Project review applications shall be submitted on forms provided by the Commission. Forms are available at the Commission office or Web site.

3. **ACTION BY COMMISSION**. The Commission shall act within 60 days after receipt of a complete application, including all required information, exhibits and fees. If a state or federal law or court order requires a process to occur before the Commission acts on an application, or if an application requires prior approval of a state or federal agency, the deadline for the Commission to act is extended to 60 days after completion of the required process or the required prior approval is granted. The Commission may extend the initial 60-day period by providing written notice of the extension to the applicant. The extension may not exceed 60 days unless approved by the applicant.

4. **SUBMITTAL**. A complete project review application with all required information and exhibits shall be filed with the Commission at least 14 calendar days prior to the scheduled meeting date of the Commission. Late or incomplete submittals will be scheduled to a subsequent meeting date.

5. **CONDITIONS**. A project review may be approved subject to reasonable conditions to assure compliance with these Rules. The conditions may include a requirement that the applicant and owner enter into an agreement with the member city in a form acceptable to the Commission to a) specify responsibility for the construction and future maintenance of approved structures or facilities, b) document other continuing obligations of the applicant or owner, c) grant reasonable access to the proper authorities for inspection, monitoring and enforcement purposes, d) affirm that the Commission or other political subdivisions can require or perform necessary repairs or reconstruction of such structures or facilities, e) require indemnification of the Commission for claims arising from issuance of the approved project review or construction and use of the approved structures or facilities, and f) reimburse the reasonable costs incurred to enforce the agreement. Project reviews and agreements may be filed for record to provide notice of the conditions and continuing obligations.

6. **ISSUANCE OF PROJECT REVIEWS**. The Commission will issue a project review approval only after the applicant has satisfied all requirements of these Rules and paid all required fees.

7. **VALIDITY**. Issuance of a project review approval based on plans, specifications, or other data shall not prevent the Commission from thereafter requiring the correction of errors in the approved plans, specifications and data, or from preventing any activity being carried on thereunder in violation of these Rules.

8. **MODIFICATIONS**. The applicant shall not modify the approved activity or plans and specifications on file with the Commission without the prior approval of the Commission.

9. **INSPECTION AND MONITORING**. With permission of the property owner and under the authority of the member city, the Commission may perform such field inspections and monitoring of the approved activity as the Commission deems necessary to determine compliance with the conditions of the project review and these Rules. Any portion of the activity not in compliance shall be promptly corrected. In applying for a project review, the applicant consents to entry upon the land for field inspections and monitoring, or for performing any work necessary to bring the activity into compliance.

10. **SUSPENSION OR REVOCATION**. The Commission may suspend or revoke a project review approved under these Rules whenever the project review approval is issued in error or on the basis of incorrect information supplied, or in violation of any provision of these Rules, or if the preliminary and final project approvals received from the municipality or county are not consistent with the conditions of the approved project review.

11. **EXPIRATION OF COMMISSION APPROVALS.** An approved project review shall expire and become null and void if the approved activity is not commenced within one year from date of approval, or if the approved activity is suspended or abandoned for a period of one year from the date the activity originally commenced. With the approval of the affected member city, applicants may apply for an extension of that period if the city review process is extended beyond the usual review period. Before an activity delayed for one year or more can recommence, the project approval must be renewed. Any applicant may apply for an extension of time to commence the approved activity under an unexpired project review approval.

    An application for renewal or extension must be in writing, and state the reasons for the renewal or extension. Any plan changes and required fees must be included with the application. There must be no unpaid fees or other outstanding violations of the approval being renewed or extended. An application for extension must be received by the Commission at least 30 days prior to the approval's expiration. The Commission shall consider the application for renewal or extension on the basis of the Rules in effect on the date the application is being considered. The Commission may extend the time for commencing the approved activity for a period not exceeding one year upon finding that circumstances beyond the control of the applicant have prevented action from being taken.

12. SEVERABILITY. If any provision of these Rules is adjudged unconstitutional or invalid by a court of competent jurisdiction, the remainder of these Rules shall not be affected thereby.

RULE C. GENERAL STANDARDS

1. POLICY. It is the policy of the Commission to protect the water resources of the watershed by requiring that all activities within the watershed comply with minimum standards for the protection of water quality and the environment.

2. REGULATION.

a) All land disturbing activities, whether requiring a project review under these Rules or otherwise, shall be undertaken in conformance with BMPs.

b) Project reviews are required of any land disturbing activity meeting the review thresholds set forth in Rule D Section 2.

c) In areas that drain to Impaired Waters, TMDL Implementation Plans may include site-specific requirements for any land-disturbing activities that are in addition to these rules and standards.

d) No person shall conduct land-disturbing activities without protecting adjacent property and waterbodies from erosion, sedimentation, flooding, or other damage.

e) Development shall be planned and conducted to minimize the extent of disturbed area, runoff velocities, and erosion potential, and to reduce and delay runoff volumes. Disturbed areas shall be stabilized and protected as soon as possible and facilities or methods used to retain sediment on-site.

f) Existing natural watercourses and vegetated soil surfaces shall be used to convey, store, filter, and retain runoff before discharge into public waters or a stormwater conveyance system.

g) Runoff from roof gutter systems shall discharge onto lawns or other pervious surfaces to promote infiltration where possible.

h) Use of fertilizers and pesticides in the shoreland protection zone shall be so done as to minimize runoff into public waters by the use of earth material, vegetation, or both. No phosphorus fertilizer shall be used unless a soil nutrient analysis shows a need for phosphorus or in the establishment of new turf.

i) When development density, topographic features, and soil and vegetation conditions are not sufficient to adequately handle runoff using natural features and vegetation, various types of constructed facilities such as diversions, settling basins, skimming devices, dikes, waterways, and ponds may be used. The Commission encourages designs using surface drainage, vegetation and infiltration rather than buried pipes and man-made materials and facilities.

j) Whenever the Commission determines that any land disturbing activity has become a hazard to any person or endangers the property of another, adversely affects water quality or any waterbody, increases flooding, or otherwise violates these Rules, the Commission shall notify the member city where the problem occurs and the member city shall require the owner of the land upon which the land disturbing activity is located, or other person or agent in control of such land, to repair or eliminate such condition within the time period specified therein. The owner of the land upon which a land disturbing activity is located shall be responsible for the cleanup and any damages from sediment that has eroded from such land. The Commission may require the owner to submit a project review application under these Rules before undertaking any repairs or restoration.

RULE D. STORMWATER MANAGEMENT

1. POLICY. It is the policy of the Commission to control excessive rates and volumes of runoff by:

a) Requiring that peak runoff rates not exceed existing conditions or the capacity of downstream conveyance facilities or contribute to flooding or streambank erosion.

b) Managing subwatershed discharge rates and flood storage volumes to be consistent with the goals of the Commission's water resources management plan and the local water resources management plans.

c) Controlling runoff rates by the use of on-site or if feasible regional detention or infiltration facilities.

d) Reviewing stormwater management structures based on the 1% (100-year) critical storm event for the drainage area.

e) Routing runoff to water treatment ponds or other acceptable facilities before discharging into waterbodies.

f) Promoting the use of natural resources for storing runoff and improving water quality and other amenities where appropriate.

g) Promoting natural infiltration of runoff.

2. REGULATION. No person or political subdivision shall commence a land disturbing activity or the development or redevelopment of land for the following types of projects without first submitting to and obtaining approval of a project review from the Commission or the city in which the project is located that incorporates a stormwater management plan for the activity, development or redevelopment:

a) Plans of any land development or site development that disturbs more than 1 acre of land.

b) Linear projects that create one acre or more of new impervious surface must meet all Commission requirements for the net new impervious surface. Sidewalks and trails that

do not exceed twelve feet (12’0”) in width, are not constructed with other improvements, and have a minimum of five feet (5’0”) of vegetated buffer on both sides are exempt from Commission requirements

c) Plans of any land development or individual site development adjacent to or containing a lake, wetland, or a natural or altered watercourse as listed in the Hennepin County wetland inventory or the final inventory of Protected Waters and Wetlands for Hennepin County, as prepared by the DNR.

d) Any culvert installation or replacement, bridge construction, stream cross-section alteration, or activity requiring a DNR Waters Permit on Elm, Rush, North Fork Rush, or Diamond Creeks or their tributaries.

e) Plans for any land development or site development within the 1% chance (100-year) floodplain as defined by the Flood Insurance Study for the member city or the Commission’s flood study.

f) Plans of any land development or site development regardless of size, if such review is requested by a member city.

g) Land disturbing activity that drains to more than one watershed, for that portion of the site draining into the Elm Creek Watershed.

3. **CRITERIA**. Stormwater management plans shall comply with the following criteria regarding runoff rate restrictions, volume control requirements, and water quality requirements.

a) A hydrograph method based on sound hydrologic theory will be used to analyze runoff for the design or analysis of flows, volumes, water quality, and water levels.

b) *Runoff rates* for the proposed activity shall not exceed existing runoff rates for the 2-year, 10-year, and 100-year critical storm events and rainfall distribution for the project location as set forth in NOAA Atlas 14 Volume 8, published June 2013, or its successor, using the online NOAA Precipitation Frequency Data Server or a similar data source. Applicant must document the location and event depths used. If an approved local water management plan requires more restrictive rate control, then the more restrictive rate shall govern. Runoff rates may be restricted to less than the existing rates when necessary for the public health and general welfare of the watershed.

i) If detention basins are used to control rate of runoff they shall be designed to provide:

(1) An outlet structure to control the 2-year, 10-year, and 100-year critical storm events to predevelopment runoff rates. Said outlet structure will be required to control critical storm events to less than predevelopment runoff rates if downstream facilities have insufficient capacity to handle the increased flow.

(2) Alternative to (1), runoff may be directed to a downstream facility within the same hydrologic subwatershed that has sufficient capacity to provide the required rate control. This means that no rate control may be required for an

individual development provided there is a regional facility designed and constructed to accommodate the flow from this property.

(3) An identified overflow spillway sufficiently stabilized to convey a 1% (100-year) critical storm event.

(4) A normal water elevation above the OHW of adjacent waterbodies.

(5) Access for future maintenance.

(6) An outlet skimmer to prevent migration of floatables and oils for at least the two year storm event.

(7) The low floor elevation shall be at minimum two feet above the critical event 100-year elevation and at minimum one foot above the emergency overflow elevation of nearby waterbodies and stormwater ponds.

ii) Regional detention basins may be used to manage peak flow rates and meet water quality objectives when feasible.

iii) Analysis of flood levels, storage volumes and flow rates for waterbodies and detention basins shall be based on the range of rainfall and snow melt duration producing the critical flood levels and discharges, whichever is most critical.

iv) Landlocked water basins may be provided with outlets that:

(1) Retain a hydrologic regime complying with floodplain and wetland alterations.

(2) Provide sufficient storage below the outlet run-out elevation to retain back-to-back 100-year, 24-hour rainfalls and runoff above the highest anticipated groundwater elevation and prevent damage to property adjacent to the basin.

(3) Do not create adverse downstream flooding or water quality conditions.

c) Stormwater runoff volume must be *infiltrated/abstracted* onsite in the amount equivalent to one point one inch (1.1”) of runoff generated from new impervious surface.

i) Applicant must minimize the creation of new impervious surface, reduce existing impervious surfaces where possible, and minimize the amount of directly connected impervious surface.

ii) When using infiltration for volume reduction, runoff must be infiltrated within 48 hours. Infiltration volumes and facility sizes shall be calculated based on the measured infiltration rate determined by a double-ring infiltrometer test(s) conducted to the requirements of ASTM Standard D3385 at the proposed bottom elevation of the infiltration area. Other testing methods may be used with the approval of the Commission’s Engineer. The measured infiltration rate shall be divided by the appropriate correction factor selected from the Minnesota Stormwater Manual. This site investigation must be conducted by a licensed soil scientist or engineer.

iii) A post-construction percolation test must be performed on each infiltration practice and must demonstrate that the constructed infiltration rate meets or exceeds the design infiltration rate prior to project acceptance by the city.

iv) Infiltration areas will be limited to the horizontal areas subject to prolonged wetting.

v) Areas of permanent pools tend to lose infiltration capacity over time and will not be accepted as an infiltration practice.

vi) Stormwater runoff must be pretreated to remove solids before discharging to infiltration areas to maintain the long term viability of the infiltration areas.

vii) Design and placement of infiltration BMPs shall be done in accordance with the Minnesota Department of Health guidance "Evaluating Proposed Stormwater Infiltration Projects in Vulnerable Wellhead Protection Areas," as amended.

viii) Constructed bioretention and infiltration practices such as rain gardens, infiltration trenches, and infiltration benches shall not be used in:

(1) Fueling and vehicle maintenance areas;

(2) Areas with less than 3 feet separation from the bottom of the infiltration system to the elevation of seasonal high groundwater;

(3) Areas with runoff from industrial, commercial and institutional parking lots and roads and residential arterial roads with less than 5 feet separation distance from the bottom of the infiltration system to the elevation of seasonal high groundwater;

(4) Areas within 400 feet of a community water well, within 100 feet of a private well, or within a delineated 1-year time of travel zone in a wellhead protection area;

(5) Sites documented to contain contaminated soils or groundwater.

ix) Credit towards compliance with the abstraction requirement in (c) may be achieved by:

(1) Meeting post construction soil quality and amendment depth requirements. Areas that will be subjected to clearing, grading, or compaction that will not be covered by impervious surface, incorporated into a drainage facility, or engineered as structural fill or slope may be included in the credit calculation if they meet post construction soil quality and amendment depth requirements. Soil amendment areas become part of the site's storm drainage system, and must be protected by a utility and drainage easement and be included in the site's utility maintenance agreement. The applicant may compute a credit of 0.5 inches over the soil amendment area and apply that toward the abstraction volume requirement.

(a) A minimum 8-inch depth of compost amended soil or imported topsoil shall be placed in all areas of the project site being considered for the abstraction

credit. Before the soil is placed, the subsoil must be scarified (loosened) at least 4 inches deep, with some incorporation of the amended soil into the existing subsoil to avoid stratified layers.

(b) Soil amendment may be achieved by either mixing 2 inches of approved compost into the 8 inches of soil depth, or by mixing a custom-calculated amount of compost to achieve 8 inches of uncompacted soil depth with a minimum organic content of five percent.

(c) The amended areas must pass a 12-inch probe test during the site final inspection, in accordance with the Commission's testing procedure. Once amended, soil areas must be protected from recompaction.

(2) Preserving undisturbed forest or grassland conservation areas. Conservation areas must remain undisturbed during construction and must be protected by a permanent conservation easement prescribing allowable uses and activities on the parcel and preventing future development. A long-term vegetation management plan describing methods of maintaining the conservation area in a natural vegetative condition must be submitted with the stormwater management plan. The applicant may compute a credit of 0.5 inches over the conservation area and apply that toward the abstraction volume requirement.

(3) Providing wetland buffers in excess of minimum requirements. Areas eligible for credit must meet all wetland buffer requirements, must be monumented and shown on the construction plans. The applicant may compute a credit of 0.5 inches over the excess buffer area and apply that toward the abstraction volume requirement.

(4) Disconnecting impervious surface by redirecting runoff across a pervious surface or into an engineered bioinfiltration facility. Impervious disconnection must be designed to prevent any reconnection of runoff with the storm drain system. The applicant may subtract the disconnected impervious surface area from the total impervious surface area used to compute the required abstraction volume.

x) Alternative to (c), runoff may be directed to a downstream facility within the same hydrologic subwatershed that has sufficient capacity to provide the required volume management. This means that no volume management may be required for an individual development provided there is a regional facility designed and constructed to accommodate the volume from this property.

d) Where infiltration is not advisable or infeasible due to site conditions, *biofiltration* must be provided for that part of the abstraction volume that is not abstracted by other BMPs. Where biofiltration is infeasible, at a minimum filtration through a medium that incorporates organic material, iron fillings, or other material to reduce soluble phosphorus must be provided.

e) There shall be *no net increase in total phosphorus (TP) or total suspended solids (TSS)* from pre-development land cover to post-development land cove. Pre-development land cover is defined as the predominant land cover over the previous 10 years. The TP

and TSS export coefficients to be used to calculate predevelopment and post-development land use loadings are set forth in Commission project review guidance.

i) Full infiltration of one point one (1.1) inches of runoff from all impervious surface will satisfy (e).

ii) If it is not feasible to achieve the full 1.1 inch infiltration requirement, a combination of BMPs may be used to achieve the no-net-increase requirement.

iii) If permanent sedimentation and water quality ponds are used they shall be designed to the Wet Pond Design Standards set forth on Appendix A to these Rules and provide:

(1) Water quality features consistent with NURP criteria and best management practices.

(2) A permanent wet pool with dead storage of at least the runoff from a 2.5-inch storm event.

iv) Alternative to (e), runoff may be directed to a downstream facility within the same hydrologic subwatershed that has sufficient capacity to provide the required treatment. This means that no treatment may be required for an individual development provided there is a regional facility designed and constructed to accommodate the flow from this property.

4. WAIVERS.

a) The Commission may waive the on-site runoff rate, volume and water quality control design criteria as noted above, if a municipality has an off-site stormwater facility that provides equivalent control and treatment of runoff that conforms to Commission standards.

b) The design criteria for infiltration may be waived for sites with total impervious surface of less than one acre if infiltration BMPs have been incorporated to the maximum extent possible.

5. EXHIBITS. The following exhibits shall accompany the project review application (one set full size, one set reduced to a maximum size of 11" x 17", and one electronic set in pdf format). All plans must be signed by a licensed professional engineer registered in Minnesota.

a) Property lines and delineation of lands under ownership of the applicant.

b) Delineation of the subwatershed contributing runoff from off-site, proposed and existing subwatersheds on-site, emergency overflows and watercourses.

c) Proposed and existing stormwater facilities location, alignment and elevation.

d) Delineation of existing on-site wetland, marsh, shoreland and floodplain areas.

e) Where infiltration or filtration is used as a stormwater management practice, identification, description, results of double-ring infiltrometer tests, and permeability and approximate delineation of site soils and seasonal high groundwater elevation in both existing and proposed as-developed condition.

f) Existing and proposed ordinary high and 1% chance (100-year) water elevations on-site.

g) Existing and proposed site contour elevations at 2-foot intervals, referenced to NAVD (1988 datum). If NAVD 1988 is not used, applicant must specify the datum used and the appropriate conversion factor.

h) Construction plans and specifications of all proposed stormwater management facilities, including design details for outlet controls.

i) Runoff volume and rate analysis for the 2-year, 10-year, and 100-year critical storm events, existing and proposed.

j) Pre-construction and post-construction annual runoff volume (ac-ft), annual total phosphorus (lbs/yr), and annual total suspended solids (lb/yr).

k) All hydrologic, water quality and hydraulic computations made in designing the proposed stormwater management facilities.

l) A narrative describing the pre-and post-construction drainage conditions and the post-construction BMPs incorporated in the plans.

m) Applications requesting a soil management credit must include a Soil Management Plan (SMP) that shall include an 11” x 17” or larger site map indicating areas where soils will be amended, and calculations for soil volumes to be stockpiled and amounts and specifications of amendment or topsoil to be imported to achieve specified minimum organic matter content.

n) Delineation of any ponding, flowage or drainage easements, or other property interests, to be dedicated for stormwater management purposes.

6. **MAINTENANCE**. All stormwater management structures and facilities shall be maintained in perpetuity to assure that the structures and facilities function as originally designed. The owner of any water quality treatment device if not a governmental unit shall provide to the member city, in a form acceptable to the Commission, a recordable agreement detailing an operations and maintenance plan that assures that the structure(s) will be operated and maintained as designed.

7. **EASEMENTS**. The member city shall obtain from the applicant, in form acceptable to the Commission, recordable temporary and perpetual easements for ponding, flowage and drainage purposes over hydrologic features such as waterbodies, wetlands, buffers, floodplain, and stormwater basins and other permanent BMPs. The easements shall include the right of reasonable access for inspection, monitoring, maintenance and enforcement purposes.

8. **COVENANTS**. The Commission may require as a condition of project review approval that the member city shall require that the land be subjected to restrictive covenants or a conservation easement, in form acceptable to the Commission, to prevent the future expansion of impervious surface and the loss of infiltration capacity.

RULE E. EROSION AND SEDIMENT CONTROL

1. **POLICY**. It is the policy of the Commission to control runoff and erosion and to retain or control sediment on land during land disturbing activities by requiring the preparation and implementation of erosion and sediment control plans.

2. **REGULATION**. No person or political subdivision shall commence a land disturbing activity or the development or redevelopment of land for which a project review is required under Rule D without first submitting to and obtaining approval of a project review from the Commission that incorporates an erosion and sediment control plan for the activity, development or redevelopment.

3. **CRITERIA**. Erosion and sediment control plans shall comply with the following criteria:

   a) Erosion and sediment control measures shall be consistent with best management practices as demonstrated in the most current version of the MPCA manual "Protecting Water Quality in Urban Areas," and shall be sufficient to retain sediment on-site.

   b) Erosion and sediment controls shall meet the standards for the General Permit Authorization to Discharge Storm Water Associated with Construction Activity Under the National Pollutant Discharge Elimination System/State Disposal System Permit Program Permit MN R100001 (NPDES General Construction Permit) issued by the Minnesota Pollution Control Agency, except where more specific requirements are required.

   c) All erosion and sediment controls shall be installed before commencing the land disturbing activity, and shall not be removed until completion.

   d) The activity shall be phased when possible to minimize disturbed areas subject to erosion at any one time.

4. **EXHIBITS**. The following exhibits shall accompany the project review application (one set full size, one set reduced to a maximum size of 11" x 17", and one electronic set in pdf format). Erosion and sediment control plans must be prepared by a qualified professional.

   a) An existing and proposed topographic map showing contours on and adjacent to the land, property lines, all hydrologic features, the proposed land disturbing activities, and the locations of all runoff, erosion and sediment controls and soil stabilization measures.

   b) Plans and specifications for all proposed runoff, erosion and sediment controls, and temporary and permanent soil stabilization measures.

c) Detailed schedules for implementation of the land disturbing activity, the erosion and sediment controls, and soil stabilization measures.

d) Detailed description of the methods to be employed for monitoring, maintaining and removing the erosion and sediment controls, and soil stabilization measures.

e) Soil borings if requested by the Commission.

5. **MAINTENANCE**. The project review applicant shall be responsible for proper operation and maintenance of all erosion and sediment controls and soil stabilization measures, in conformance with best management practices and the NPDES permit. The project review applicant shall, at a minimum, inspect and maintain all erosion and sediment controls and soil stabilization measures daily during construction, weekly thereafter, and after every rainfall event exceeding 0.5 inches, until vegetative cover is established.

RULE F. FLOODPLAIN ALTERATION

1. **POLICY**. It is the policy of the Commission to prevent and control flooding damage by:

a) Preserving existing water storage capacity below the 100-year critical flood elevation on all waterbodies in the watershed to minimize the frequency and severity of high water.

b) Minimizing development in the floodplain that will unduly restrict flood flows or aggravate known high water problems.

c) Requiring compensatory storage for floodplain fill.

2. **REGULATION**. No person or political subdivision shall alter or fill land below the 100-year critical flood elevation of any public waters watercourse, public waters wetland, or other wetland without first obtaining an approved project review from the Commission.

3. **CRITERIA**.

a) Floodplain alteration or filling shall not cause a net decrease in flood storage capacity below the projected 1% (100-year) critical flood elevation or alter the timing of flooding unless it is shown that the proposed alteration or filling, together with the alteration or filling of all other land on the affected reach of the waterbody to the same degree of encroachment as proposed by the applicant, will not cause high water or aggravate flooding on other land and will not unduly restrict flood flows.

b) All new structures shall be constructed with the low floor at the elevation required in the municipality's ordinance, however, in no case shall the low floor be less than two feet above the regulatory elevation.

4. **EXHIBITS**. The following exhibits shall accompany the project review` application (one set full size, one set reduced to a maximum size of 11" x 17", and one electronic set in pdf format):

a) Site plan showing boundary lines, delineation and existing elevation contours of the work area, ordinary high water level, and 1% (100-year) critical flood elevation. All elevations shall be referenced to the NAVD 1988 datum. If NAVD 1988 is not used, applicant must specify the datum used and the appropriate conversion factor.

b) Grading plan showing any proposed elevation changes.

c) Preliminary plat of any proposed subdivision.

d) Determination by a registered professional engineer of the 100-year critical flood elevation before and after the proposed activity.

e) Computation of the change in flood storage capacity as a result of the proposed alteration or fill.

f) Erosion and sediment control plan which complies with these Rules.

g) Soil boring logs and report if available.

5. **EXCEPTIONS**. If a municipality has adopted a floodplain ordinance that prescribes an allowable degree of floodplain encroachment, the applicable ordinance shall govern the allowable degree of encroachment and no project review will be required under this Floodplain Alteration Rule.

RULE G. WETLAND ALTERATION

1. **POLICY**. It is the policy of the Commission to preserve and protect wetlands for their water quality, stormwater storage, habitat, aesthetic, and other attributes by:

a) Achieving no net loss in the quantity, quality and biological diversity of wetlands in the watershed.

b) Increasing the quantity, quality and biological diversity of wetlands in the watershed by restoring or enhancing diminished or drained wetlands.

c) Enforcing mitigation of direct or indirect impacts from activities that destroy or diminish the quantity, quality and biological diversity of watershed wetlands.

d) Replacing affected wetlands where sequencing demonstrates that avoidance is not feasible.

2. **REGULATION**. No person or political subdivision shall drain, fill, excavate or otherwise alter a wetland without first obtaining the approval of a wetland replacement plan from the local government unit with jurisdiction over the activity. Mitigation of wetland impacts will be considered in the following sequence: 1) mitigated by enhancing the impacted wetland; 2) mitigated within the subcatchment of the impacted wetland; 3)

mitigated in the drainage area of the impacted wetland; 4) mitigated in the watershed of the impacted wetland; 5) mitigated through purchase of wetland bank credits.

3. CRITERIA.

a) Any drainage, filling, excavation or other alteration of a wetland shall be conducted in compliance with Minnesota Statutes, section 103G.245, the Wetland Conservation Act, and regulations adopted thereunder.

b) A wetland may be used for stormwater storage and treatment only if pre-treatment is provided and the use will not adversely affect the function and public value of the wetland as determined by the local government unit.

c) Other activities which would change the character of a wetland shall not diminish the quantity, quality or biological diversity of the wetland.

4. LOCAL GOVERNMENT UNIT. The Commission will serve as the local government unit (LGU) for administration of the Wetland Conservation Act (WCA) for those cities that have designated the Commission to serve in that capacity. If a member city has not designated the Commission as the LGU for the administration of the WCA, they shall be responsible for administering the WCA. MnDOT serves as the LGU on its right of way.

RULE H. BRIDGE AND CULVERT CROSSINGS

1. POLICY. It is the policy of the Commission to maintain channel profile stability and conveyance capacity by regulating crossings of watercourses for driveways, roads and utilities.

2. REGULATION. No person or political subdivision shall construct or improve a road, driveway or utility crossing across any public waters watercourse or county ditch without first submitting to the Commission and receiving approval of a project review.

3. CRITERIA. Crossings shall:

a) Retain adequate hydraulic capacity to pass the 100-year flow and maintain the 100-year flow profile, if available.

b) Mimic the existing base flow (1-year, 2-year) conditions.

c) Not adversely affect water quality.

d) Represent the "minimal impact" solution to a specific need with respect to all reasonable alternatives.

e) Allow for future erosion, scour, and sedimentation maintenance considerations.

f) If the project proposes changing the FEMA FIS profile, a FEMA map revision must be obtained.

g) If the project requires a DNR Work in Public Waters permit, the conditions of that permit must be satisfied.

4. **EXHIBITS**. The following exhibits shall accompany the project review application (one set full size, one set reduced to a maximum size of 11" x 17", and one electronic set in pdf format):

a) Construction plans and specifications.

b) Analysis prepared by a registered professional engineer showing the effect of the project on hydraulic capacity and water quality.

c) An erosion and sediment control plan that complies with these Rules.

5. **MAINTENANCE**.

a) The maintenance, reconstruction and stabilization of any public crossing shall be the responsibility of the political subdivision with jurisdiction over the crossing.

b) The maintenance, reconstruction and stabilization of any private crossing shall be the responsibility of the owner of the crossing.

c) If a crossing over any public waters watercourse is determined by the Commission to be causing significant erosion, the Commission may notify the member city where said crossing is located and the member city may order the owner of the crossing to make necessary repairs or modifications to the crossing and outlet channel.

RULE I. BUFFER STRIPS

1. **POLICY**. It is the policy of the Commission to maintain the water quality and ecological functions provided by watercourses, lakes and wetlands by requiring the development of vegetated buffers around watercourses, lakes and wetlands where development and redevelopment occurs, and to encourage the installation of vegetated buffers around all watercourses and wetlands. Vegetative buffers reduce the impact of surrounding development and land use on watercourse, lake and wetland functions by stabilizing soil to prevent erosion, filtering sediment from runoff, and moderating water level fluctuations during storms. Buffers provide essential habitat for wildlife. Requiring buffers recognizes that watercourse, lake and wetland quality and function are related to the surrounding upland.

2. **REGULATION**. No person or political subdivision shall commence a land disturbing activity or the development or redevelopment of land for which a project review is required under Rule D on land that contains or is adjacent to a watercourse, lake or wetland without first submitting to and obtaining approval of a project review from the Commission that incorporates a vegetated buffer strip between the development or redevelopment and the watercourse or wetland.

3. GENERAL PROVISIONS.

a) This Rule shall apply to all lands containing or abutting watercourses, lakes or wetlands that are subject to a project review under these Rules. Watercourses, lakes and wetlands shall be subject to the requirements established herein, and other applicable federal, state and local ordinances and regulations. If a municipality has a buffer strip requirement that has been reviewed and approved by the Commission, the municipal regulation shall have precedence over the Commission's Rules.

b) An applicant shall determine whether any watercourse, lake or wetland exists, and shall delineate the boundary for any wetland on the land. An applicant shall not be required to delineate wetlands on adjacent property, but must review available information to estimate the wetland boundary.

c) Documentation identifying the presence of any watercourse, lake or wetland on the applicant's land, including wetland delineation and buffer strip vegetation evaluation, must be provided to the Commission with a project review application.

d) Wetland and buffer strip identifications and delineations shall be prepared in accordance with state and federal regulations.

4. CRITERIA. The following standards apply to all lands that contain or abut a watercourse, lake or wetland:

a) BMPs shall be followed to avoid erosion and sedimentation during land disturbing activities.

b) When a buffer strip is required the applicant shall, as a condition to issuance of an approved project review:

i) Submit to the member city, in a form acceptable to the Commission, a recordable conservation easement for protection of approved buffer strips. The easement shall describe the boundaries of the watercourse or wetland and buffer strips, identify the monuments and monument locations, and prohibit any of the alterations set forth in Paragraph 5(e) below and the removal of the buffer strip monuments within the buffer strip or the watercourse or wetland.

ii) Submit to the member city, in a form acceptable to the Commission, an executed buffer maintenance plan and agreement for the first two growing seasons following establishment, and providing an escrow or an alternate surety to assure successful vegetation establishment.

iii) Install the wetland monumentation required by Paragraph 7 below.

c) All open areas within the buffer strip shall be seeded or planted in accordance with Paragraph 8 below. All seeding or planting shall be completed prior to removal of any erosion and sediment control measures. If construction is completed after the end of

the growing season, erosion and sediment control measures shall be left in place and all disturbed areas shall be mulched for protection over the winter season.

5. BUFFER STRIPS.

a) A buffer strip shall be maintained around the perimeter of all watercourses, lakes or wetlands. The buffer strip provisions of this Rule shall not apply to any parcel of record as of the date of this Rule until such parcel is developed or redeveloped or unless required by a previous project review. The Commission does, however, strongly encourage the installation of buffer strips on all parcels in the watershed.

b) Buffer strips on Elm Creek, Rush Creek, North Fork Rush Creek, and Diamond Creek shall be an average of 50 feet wide and a minimum of 25 feet wide, measured from the top of bank. Buffer strips on other watercourses, lakes, and wetlands shall be an average 25 feet wide and a minimum of 10 feet wide. It is recommended that all structures have a minimum 15 foot setback from the buffer strip.

c) Buffer strips shall apply whether or not the watercourse or wetland is on the same parcel as a proposed development.

d) Buffer areas disturbed by grading operations must be finish graded to a slope of 6:1 or less or an increase in width of five (5) feet for each one (1) foot decrease in horizontal width (i.e., a 25 required foot buffer width at a 5:1 slope must be 30 feet wide, 4:1 must be 35 feet wide, and 3:1 must be 40 feet wide.)

e) Buffer strip vegetation shall be established and maintained in accordance with Paragraph 8 below. Buffer strips shall be identified within each parcel by permanent monumentation in accordance with Paragraph 7 below.

f) Subject to Paragraph 5(g) below, alterations including building, storage, paving, mowing, plowing, introduction of noxious vegetation, cutting, dredging, filling, mining, dumping, grazing livestock, agricultural production, yard waste disposal or fertilizer application, are prohibited within any buffer strip. Noxious vegetation shall be removed to meet state standards. Alterations would not include plantings that enhance the natural vegetation or selective clearing or pruning of trees or vegetation that are dead, diseased or pose similar hazards.

g) The following activities shall be permitted within any buffer strip, and shall not constitute prohibited alterations under Paragraph 5(f) above:

    i) Use and maintenance of an unimproved access strip through the buffer, not more than 20 feet in width, for recreational access to the watercourse, lake or wetland and the exercise of riparian rights.

    ii) Placement, maintenance, repair or replacement of utility and drainage systems that exist on creation of the buffer strip or are required to comply with any subdivision approval or building permit obtained from the municipality or county, so long as any adverse impacts of utility or drainage systems on the function of the buffer strip have been avoided or minimized to the extent possible.

iii) Construction, maintenance, repair, reconstruction, or replacement of existing and future public roads crossing the buffer strip, so long as any adverse impacts of the road on the function of the buffer strip have been avoided or minimized to the extent possible.

6. ALTERNATE WETLAND PROTECTION METHODS.

a) Should application of the buffer standards in Paragraph 5 above render a parcel of record as of the date of this Rule unbuildable based on current city ordinances, the Watershed engineer may allow alternative methods to protect the wetland. Such methods must include a buffer strip no less than ten feet wide, supplemented by redirection of drainage to a wider area of buffer, or to a Best Management Practice such as a rain garden or vegetated swale.

b) The use of alternative wetland protection methods will be evaluated as part of the review of a stormwater management plan under these Rules. Alternative wetland protection methods must be in keeping with the spirit and intent of this Rule.

7. MONUMENTATION. A monument shall be required at each parcel line where it crosses a buffer strip and shall have a maximum spacing of 200 feet along the edge of the buffer strip. Additional monuments shall be placed as necessary to accurately define the edge of the buffer strip. A monument shall consist of a post and a buffer strip sign meeting Commission standards. The signs shall include warnings about mowing, disturbing or developing the buffer strip.

8. VEGETATION.

a) Where acceptable natural vegetation exists in buffer strip areas, the retention of such vegetation in an undisturbed state is required unless an applicant receives approval to replace such vegetation. A buffer strip has acceptable natural vegetation if it:

i) Has a continuous, dense layer of native vegetation that has been uncultivated or unbroken for at least 5 consecutive years; or

ii) Has an overstory of native trees and/or shrubs that has been uncultivated or unbroken for at least 5 consecutive years; or

iii) Contains a mixture of the plant communities described in Subparagraphs 8(a)(i) and (ii) above that has been uncultivated or unbroken for at least 5 years.

b) Notwithstanding the performance standards set forth in Paragraph 8(a), the Commission may determine existing buffer strip vegetation to be unacceptable if:

i) It contains undesirable plant species including but not limited to common buckthorn, reed canary grass, or species on the Minnesota State Noxious Weeds List; or

ii) It has topography that tends to channelize the flow of runoff; or

iii) For some other reason it is unlikely to retain nutrients and sediment.

iv) Where buffer strips are not vegetated or have been cultivated or otherwise disturbed within 5 years of the project review application, such areas shall be replanted and maintained with native vegetation. The buffer strip plantings must be identified on the project review application. Acceptable buffer strip design and planting methods are detailed in the reference document "Restoring and Managing Native Wetland and Upland Vegetation" (Jacobson 2006, prepared for BWSR and MnDOT).

c) Buffer strip vegetation shall be established and maintained in accordance with the requirements found in this Paragraph. During the first two full growing seasons, the owner must replant any buffer strip vegetation that does not survive. The owner shall be responsible for reseeding and/or replanting if the buffer strip changes at any time through human intervention or activities. At a minimum the buffer strip must be maintained as a "no mow" area.

9. ENCROACHMENT.

a) Buffer strips must be kept free of all materials, equipment and structures, including fences and play equipment. Buffer strips must not be grazed, cropped, logged or mown except as approved by the Commission. The topography of the buffer strips shall not be altered by any means, including paving, plowing, cutting, dredging, filling, mining, or dumping.

b) Variances.

i) Only variances meeting the standards and criteria set forth in Rule K shall be granted.

ii) Variances shall not be granted that would circumvent the intent and purposes of this Rule.

RULE J. FEES

1. POLICY. The Commission finds that it is in the public interest to require applicants to pay the cost of administering and reviewing project review applications, and inspecting approved activities to assure compliance with these Rules, rather than using the Commission's annual administrative levy for such purposes. The Commission shall by resolution establish a schedule of fees that may be amended from time to time to reflect the cost of providing each service.

2. APPLICATION. Each application for the issuance, transfer or renewal of a project review recommendation under these Rules shall be accompanied by an application fee to defray the cost of processing the application.

3. REVIEW. A project review applicant under these Rules shall pay a fee for the cost of the review and analysis of the proposed activity, including services of engineering, legal, and

other consultants. The review fee shall be payable upon the submission of the project review application.

4. **WETLAND MITIGATION PLAN**. A project review applicant under these rules shall pay a fee for the cost of the review and analysis of a proposed activity involving a wetland mitigation plan in a municipality where the Commission is the LGU. The fee is to cover the costs of engineering, legal, and other consultants, and shall be payable upon the submission of the project review application. Should the cost of said wetland mitigation plan review exceed the review fee, the application shall deposit such additional sums as are needed to pay such costs. Failure to pay such costs is grounds to deny the application or suspend review.

5. **WETLAND MITIGATION PLAN MONITORING**. A project review applicant under these rules in a municipality where the Commission is the LGU shall deposit an escrow to cover the cost of Commission monitoring and annual monitoring plan review for the five-year period. If the escrow amount is insufficient to cover the costs the Commission may require additional funds from the applicant.

6. **WETLAND MITIGATION SECURITY DEPOSIT**. A project review applicant under these rules in a municipality where the Commission is the LGU shall provide a security to assure that the replacement plan is followed. The amount of the security shall be calculated on a case-by-case basis based on the estimated cost of construction, follow up and contingency. The security may also include an amount determined by the Commission to be sufficient to protect the public in the event the replacement plan does not succeed.

7. **DEPOSITS**. The Commission will maintain an accounting for all deposits made under this Rule. No interest will be paid to applicants for funds held in deposit.

RULE K. VARIANCES

1. **WHEN AUTHORIZED**. The Commission may grant variances from the literal provisions of these Rules. A variance shall only be granted when in harmony with the general purpose and intent of the Rules in cases where strict enforcement of the Rules will cause practical difficulties or particular hardship, and when the terms of the variance are consistent with the Commission's water resources management plan and Minnesota Statutes, chapter 103D.

2. **HARDSHIP**. "Hardship" as used in connection with the granting of a variance means the land in question cannot be put to a reasonable use if used under the conditions allowed by these Rules; the plight of the applicant is due to circumstances unique to the land and not created by the applicant; and the variance, if granted, will not adversely affect the essential character of the locality and other adjacent land. Economic considerations alone shall not constitute a hardship if a reasonable use for the land exists under the terms of these Rules. Conditions may be imposed in the granting of a variance to insure

compliance and to protect adjacent land and the public health and general welfare of the Commission.

3. **PROCEDURE**. An application for a variance shall describe the practical difficulty or particular hardship claimed as the basis for the variance. The application shall be accompanied with such surveys, plans, data and other information as may be required by the Commission to consider the application.

4. **VIOLATION**. A violation of any condition imposed in the granting of a variance shall be a violation of these Rules and shall automatically terminate the variance.

RULE L. ENFORCEMENT

1. **ADMINISTRATION**. These Rules shall be administered by the Commission. The Commission shall consider applications required under these Rules and determine whether such applications should be approved, approved with conditions, or denied. Such determination shall be communicated to the member city in which the project lies and to the applicant.

2. **IMPLEMENTATION BY MEMBER CITIES**. It shall be the duty of each city to enforce and implement such determinations by the Commission under the various permitting processes and regulations of the city. Each city shall make such amendments to its official controls, regulations, and permitting processes as are necessary to provide it with the authority to enforce and implement the determinations of the Commission.

3. **FAILURE BY CITY TO IMPLEMENT**. Upon a determination by the Commission that a city has not enforced or implemented a decision of the Commission in the administration of these Rules, the Commission shall notify the city of such determination and direct that appropriate action be taken by the city. If the city does not take such action, the Commission may take such legal steps as are available to it to effect such enforcement or implementation.

RULE M. AMENDMENT OF THESE RULES

1. **AMENDMENT.** These rules may be amended from time to time by the Commission. Proposed amendments shall be reviewed by the member cities prior to adoption unless the Commission determines that said amendment is of a minor or technical nature. Minor or technical amendments include recodifying or streamlining the rules, clarifying policies, or other actions that do not adversely affect a member city or impact the Commission's or member cities' ability to meet their water management plan goals.

2. **PROCEDURE.** Proposed major amendments to these rules shall be first considered by the Commission and then forwarded to the member cities for a 45-day comment period. Following that comment period, the Commission shall consider the proposed amendment and the comments received for approval. All amendments shall be made by resolution.

ELM CREEK WATERSHED MANAGEMENT COMMISSION
RULES APPENDIX A
WET POND DESIGN STANDARDS

Permanent Pool Depth	Average 4', maximum 10'
Permanent Pond Surface Area	Greater of 2% of watershed's impervious area and 1% of the watershed
Permanent Pool Length to Width Ratio	3:1 or greater with an irregularly shaped shoreline
Side Slopes	10:1 for 10-foot bench centered on the normal water elevation and between 3:1 and 20:1 elsewhere
Side Slope Stabilization	Native seed with mix 33-261 (MnDOT 310), 34-271 (BWSR W2) or equivalent between NWL and HWL, provide 10' buffer where possible with mix 35-221 (MnDOT 330 (dry)) or mix 35-241 (MnDOT 350 (mesic))
Floatable Removal	Skimming device discharging at no greater than 0.5 fps during the 2-year event or a submerged outlet with a minimum 0.5 feet from the normal water level to the crown of the outlet pipe
Sediment Accumulation Area	Provide maintenance pads to remove sediment deltas at inlets
Permanent Pool Volume	A 4-foot mean depth and equal to 2.5-inch rain over the watershed
Source	Protecting Water Quality in Urban Areas (MPCA 2000)

SUMMARY

Elm Creek Watershed Management Commission
Management Rules and Standards*

	Standard	Purpose	Applicability
Project Reviews Required	A Stormwater Management Plan consistent with all applicable management rules and standards* must be reviewed and approved prior to commencement of land disturbing activities.	To control excessive rates and volumes of runoff; manage subwatershed discharge rates and flood storage volumes; improve water quality; protect water resources; and promote natural infiltration of runoff.	All development or redevelopment projects of the following types: • Projects disturbing more than one acre of land • Projects within the 100-year floodplain • Projects adjacent to or within a lake, wetland, or watercourse • Any land disturbing activity requested by a member city to be reviewed regardless of project size • Linear projects creating more than one acre of new impervious surface
Rate Control	Peak runoff rates may not exceed existing rates for the 2-year, 10-year, and 100-year critical storm event; or the capacity of downstream conveyance facilities; or contribute to flooding	To control excessive rates and volumes of runoff; manage subwatershed discharge rates and flood storage volumes	All projects disturbing more than one acre of land. Redevelopment projects disturbing less than 50 percent of the site must meet the requirement only for the disturbed area.
Volume Manage-ment	1.1 inch of impervious surface runoff must be abstracted on site within 48 hours	To control excessive rates and volumes of runoff; manage discharge rates and flood storage volumes; protect stream channels from erosion; and promote natural infiltration of runoff.	All projects disturbing more than one acre of land. Redevelopment projects disturbing less than 50 percent of the site must meet the requirement only for the disturbed area.
Erosion and Sediment Control	Erosion control plan using Best Management Practices (BMPs) and consistent with the NPDES General Construction Permit is required	To control erosion and sediment so as to protect conveyance systems and water quality	All projects requiring a project review
Floodplain Alteration	Compensating storage is required to mitigate floodplain fill	To prevent and control flooding damage	All development or redevelopment projects within the 100-year floodplain regardless of project size
Water Quality	No net increase in total phosphorus and total suspended sediment annual load	To protect water quality	All projects disturbing more than one acre of land. Redevelopment projects disturbing less than 50 percent of the site must meet the requirement only for the disturbed area.
Buffer Strips	Vegetated buffer strips average 50 foot, minimum 25 foot wide adjacent to Elm, Diamond, Rush, and North Fork Rush Creeks; average 25 foot, minimum 10 foot wide adjacent to lakes, wetlands and other watercourses	To protect water quality; reduce erosion and sedimentation; reduce pollutants from runoff and debris; and provide habitat	All projects requiring a project review that contain or abut a wetland or watercourse
Wetland	Wetlands may not be drained, filled, excavated, or otherwise altered without an approved wetland replacement plan from the local government unit (LGU) with jurisdiction	To preserve and protect wetlands for their water quality, stormwater storage, habitat, aesthetic, and other attributes	All land disturbing activity impacting a wetland as defined by the Wetland Conservation Act (WCA)

*Important Note: Approved TMDL Implementation Plans may have additional site-specific requirements.

July 2015

MINNEHAHA CREEK WATERSHED DISTRICT
BOARD OF MANAGERS

REVISIONS
PURSUANT TO MINNESOTA STATUTES §103D.341

Adopted May 26, 2011
Effective June 1, 2011

ENFORCEMENT RULE

1. INVESTIGATION OF NONCOMPLIANCE. District staff may enter and inspect a property in the watershed to determine whether a violation of one or more District rules, a permit or an order exists or whether land-disturbing activities have been undertaken in violation of District permitting requirements.

2. ADMINISTRATIVE COMPLIANCE ORDER. Upon finding a probable violation and failure of the property owner to apply or permittee to take necessary corrective steps, the District may immediately issue a compliance order. A District compliance order may require a property owner to apply for an after-the-fact permit and/or effect corrective or restorative actions. A District compliance order may require that land-disturbing activities on the property cease.

(a) The Board of Managers has delegated authority to issue compliance orders to District staff.

3. BOARD HEARING. A compliance order issued by the District will include notice of or be followed by a notice to the property owner and/or permittee of a hearing before the Board of Managers. After notice and hearing, the Board of Managers may determine that the noncompliance or violation has been corrected and rescind the compliance order. If the Board of Managers determines that the noncompliance or violation has not been corrected, it may extend the compliance order or issue a new order finding a party in violation of a District compliance order, rule, permit or other order and directing the party to take action to correct or mitigate the effects of the violation or restore the site.

4. DISTRICT COURT ACTION. The Board of Managers may seek judicial enforcement of an order and recovery of associated legal costs and fees, as provided by Minnesota Statutes chapter 103D, through a civil or criminal action pursuant to Minnesota Statutes section 103D.545 and 103D.551.

5. LIABILITY FOR ENFORCEMENT COSTS. The permittee or owner of a property that is the subject of District enforcement efforts will be liable for associated costs incurred by the District, including but not limited to the costs of inspection and monitoring of compliance, engineering and other technical analysis, legal fees and costs, and administrative expenses.

MINNEHAHA CREEK WATERSHED DISTRICT
BOARD OF MANAGERS

REVISIONS
PURSUANT TO MINNESOTA STATUTES §103D.341

Adopted April 24, 2014
Effective June 6, 2014

EROSION CONTROL RULE

1. POLICY. It is the policy of the Board of Managers to require preparation and implementation of erosion control plans for land-disturbing activities, in order to limit erosion from wind and water; reduce flow volumes and velocities of stormwater moving off site; reduce sedimentation into water bodies; and protect soil stability during and after site disturbance. These measures should reflect the following principles:

(a) Minimize, in area and duration, exposed soil and unstable soil conditions.

(b) Minimize disturbance of natural soil cover and vegetation.

(c) Protect receiving water bodies, wetlands and storm sewer inlets.

(d) Retain sediments from disturbed properties on site.

(e) Minimize unintentional off-site sediment transport on trucks and equipment.

(f) Minimize work in and adjacent to water bodies and wetlands.

(g) Maintain stable slopes.

(h) Avoid steep slopes and the need for high cuts and fills.

(i) Minimize disturbance to the surrounding soils, root systems and trunks of trees and vegetation adjacent to site activity that are intended to be left standing.

(j) Prevent and/or mitigate the compaction of site soils.

2. PERMIT REQUIREMENT. Unless specifically exempted by section 3, Exemptions, of this rule, land-disturbing activity shall require a permit incorporating an erosion control plan approved by the District and shall be conducted in accordance with that plan. Applicants must provide a financial assurance pursuant to the District's Financial Assurance Rule. A Fast-Track permit may be issued for routine erosion control projects on a finding that the application:

(a) Complies with the submission requirements of section 4, Permit Application, of this rule;

(b) Includes an erosion control plan that:

(1) Complies with section 5, Erosion Control Plan, of this rule; and

(2) Provides for maintenance and inspection in accordance with sections 9, Maintenance, and 10, Notification and Inspection, of this rule.

Any request for a variance from a requirement of this rule must be decided by the Board of Managers.

3. EXEMPTIONS. The following land-disturbing activity shall not be subject to the requirements of this rule:

(a) Activity that:

(1) disturbs an area of less than 5,000 square feet; and

(2) involves the grading, excavating, filling or storing on site of less than 50 cubic yards of soil or earth material.

(b) Agricultural activity.

(c) Emergency activity immediately necessary to protect life or prevent substantial physical harm to person or property, provided that erosion control measures, including any necessary remedial action, are implemented as soon as possible.

(d) Activity otherwise subject to this rule, where the District has entered into a written agreement with the municipality where the activity takes place providing that the District will not exercise erosion control permitting authority within the city under the circumstances in question.

4. PERMIT APPLICATION. A written application for an erosion control permit shall be submitted by the owner of a site or an authorized representative. The application shall contain the following:

(a) Site address.

(b) Property owner's name, address and telephone number.

(c) Names, addresses, telephone numbers and responsibilities of all contractors, subcontractors and other persons who will engage in the land-disturbing activities.

(d) Name, address and telephone number of a single individual responsible for overseeing implementation of the erosion control plan on site.

(e) Documentation of all applicable federal, state, county, municipal or township applications for the proposed action or a statement that uch approval is not required.

(f) Application date.

(g) Signature of each property owner with a certification that he or she understands that the proposed activity must be conducted in compliance with this rule and the approved erosion control plan, and that the application is complete and accurate to the best of his or her belief.

When a property owner is not a natural person, the application shall bear a signature of one authorized to act on the owner's behalf and documentation of the signatory's authority.

(h) An erosion control plan as described at section 5, Erosion Control Plan, of this rule.

(i) A soils engineering report as described at section 6, Soils Engineering and Geology Reports, of this rule, if requested by the District.

(j) A geological report as described at section 6, Soils Engineering and Geology Reports, of this rule, if requested by the District.

(k) A copy of the NPDES permit number for projects that require an NPDES permit from the Minnesota Pollution Control Agency.

(l) An erosion control inspection plan in accordance with section 10, Notification and Inspection, of this rule for all projects disturbing ¼ acre or greater.

5. EROSION CONTROL PLAN. The erosion control plan is a stand-alone document that shall include the following:

(a) Site plans for existing and final proposed conditions drawn to appropriate scale. The plans shall contain:

(1) The site location in relation to surrounding roads, steep slopes, other significant geographic features, buildings and other significant structures.

(2) Existing and final grades, and the direction of flow for all pre- and post-construction runoff from the site.

(3) Site property lines.

(4) Identification and location of all existing and planned underground utilities, to be concentrated in corridors where safe, practical and feasible.

(5) Identification of all receiving waterbodies and/or stormwater conveyance systems to which the site discharges. Specification of the Impaired or Special Management waters status of each receiving waterbody or conveyance system.

(6) Identification and location of all onsite water features and facilities, including any lake, stream or wetland; any natural or artificial water diversion or detention area; any surface or subsurface drainage facility or stormwater conveyance; and any storm sewer catch basin.

(7) Location of all trees and vegetation on site, with identification of that which is intended to be retained. Installation of protective fencing so as to exclude all fill and equipment from the drip line or critical root zone, whichever is greater, of all vegetation to be retained.

(8) Location of buildings and structures on site.

(9) Proposed grading or other land-disturbing activity including areas of grubbing, clearing, tree removal, grading, excavation, fill and other disturbance; areas of soil or earth material storage; quantities of soil or earth material to be removed, placed, stored or otherwise moved on site; and delineated limits of disturbance.

(10) Locations of proposed runoff control, erosion prevention, sediment control and temporary and permanent soil stabilization measures, including, but not limited to: inlet protection, perimeter control, temporary and permanent soil stabilization, concrete wash areas, slope breaks, energy dissipation, rock construction entrance, silt curtains.

(11) Detail showing the location of all areas where compaction is to be prevented and/or mitigated. These areas shall be protected from construction vehicle traffic where practical and feasible. These areas include but are not limited to: filtration and infiltration stormwater facilities and areas that are proposed to be permanently landscaped as greenspace.

(12) The location of all onsite, existing and proposed stormwater management facilities, including, but not limited to: infiltration basins, bio-filtration basins, stormwater ponds, porous pavers, underground storage and swales.

(13) Location of any MCWD-regulated buffers on site (existing or to be established).

(b) Plans and specifications must be provided showing all proposed runoff control, erosion prevention, sediment control and temporary and permanent soil stabilization measures, in accordance with the following criteria:

(1) Plans and specifications shall conform to the provisions of "Stormwater Compliance Assistance Toolkit for Small Construction Operators" and/or the "2005 MN Stormwater Manual." (Minnesota Pollution Control Agency, 2004)

(2) All erosion and sedimentation controls proposed for compliance with this rule shall be in place before any land-disturbing activity commences.

(3) Plans shall provide that stockpiles of soil or other materials subject to erosion by wind or water shall be covered, vegetated, enclosed, fenced on the downgradient side or otherwise effectively protected from erosion in accordance with the amount of time the material will be on site and the manner of its proposed use.

(4) Silt fence shall conform to Sections 3886.1 and 3886.2, Standard Specifications for Construction, Minnesota Department of Transportation (2000 ed.), as it may be amended.

(5) Plans shall provide that all fabric fences used for erosion and sedimentation control and all other temporary controls shall not be removed until the District has determined that the site has been permanently re-stabilized and shall be removed within 30 days thereafter.

(6) Plans shall provide for permanent stabilization of all areas subject to land disturbance, retention of native topsoil on site wherever practical and feasible, and specify at least six inches of topsoil or organic matter be spread and incorporated into the underlying soil during final site treatment wherever topsoil has been removed.

(7) A detailed schedule indicating dates and sequence of land-alteration activities: implementation, maintenance and removal of erosion and sedimentation-control measures, and permanent site-stabilization measures.

(c) The District may waive specific submittal requirements of this section at the request of an applicant proposing to landscape an improved property upon a finding by the District that such requirements are not needed to assess the characteristics of the property and the adequacy of proposed control measures,

6. SOILS ENGINEERING AND GEOLOGY REPORTS. On a determination that the condition of the soils is unknown or unclear and that additional information is required to find that an applicant's proposed activity will meet the standards and purposes of this rule, the District may require soil borings or other site investigation to be conducted and may require submission of a soils engineering or geology report. The report shall include the following as requested by the District:

(a) Data and information obtained from the requested site investigation.

(b) A description of the types, composition, permeability, stability, erodibility and distribution of existing soils on site.

(c) A description of site geology.

(d) Conclusions and revisions, if any, to the proposed land-disturbing activity at the site or the erosion control plan, including revisions of plans and specifications.

7. ADDITIONAL INFORMATION. The District may require any additional information or data, as it finds relevant and necessary to evaluate and act on an application.

8. FINANCIAL ASSURANCE. The District may require the applicant to file a bond or other financial assurance in accordance with the Financial Assurance Rule. The assurance must be in the form of a performance bond, a letter of credit or a cash escrow. The assurance shall be maintained until:

(a) Final site stabilization and removal of erosion and sedimentation controls, as determined by the District, and the payment of all fees and amounts due to the District;

(b) Forty-five (45) days after written notification to the District under paragraph 10(b)(5), if the District has failed to respond in writing; or

(c) Such earlier time as the District may advise the applicant in writing.

9. MAINTENANCE. The permittee shall be responsible at all times for the maintenance and proper operation of all erosion and sediment control management practices. On any property on which land-disturbing activity has occurred pursuant to a permit issued under this rule, the permittee shall, at a minimum, maintain and repair all disturbed surfaces and all erosion and sediment control management practices and soil stabilization measures every day work is performed on the site. Specific maintenance requirements are as follows:

(a) All exposed soil areas must be stabilized as soon as possible to limit soil erosion but in no case later than 14 days after the construction activity in that portion of the site has temporarily or permanently ceased.

(b) The normal wetted perimeter of any temporary or permanent drainage ditch or swale that drains water from the site, or diverts water around a site must be stabilized. Stabilization must be completed within 24 hours of connecting to a surface water. Portions of the ditch that are under construction must be stabilized within 24 hours after the construction activity in that portion has ceased.

(c) Sediment control practices must minimize sediment from entering surface waters, including curb and gutter systems and storm sewer inlets.

(d) Sediment control practices must be established on all downgradient perimeters before any upgradient land-disturbing activities begin. These practices shall remain in place until the District has determined that the site soils have been permanently stabilized.

(e) The timing of the installation of sediment control practices may be adjusted to accommodate short-term activities such as clearing or grubbing or passage of vehicles. Any short-term activity must be completed as soon as possible and the sediment control practices must be installed immediately after the activity is completed. However, sediment control practices must be installed before the next precipitation event even if the activity is not completed.

(f) All storm drain inlets must be protected by BMPs determined by the District to be appropriate, during construction until all sources with potential for discharging to the inlet have been stabilized.

(g) Pipe outlets must be provided with temporary or permanent energy dissipation within 24 hours of connection to a surface water.

(h) In order to maintain sheet flow and minimize rills and gullies, there shall be no unbroken slope length of greater than 30 feet for slopes with a grade of 3:1 or steeper.

(i) Temporary stockpiles must have effective sediment controls in place to prevent discharge to surface waters including stormwater conveyances such as curb and gutter.

(j) Vehicle tracking of sediment from the construction site must be minimized by BMPs such as rock construction entrances, wash racks or equivalent practices. Street sweeping must be used if such BMPs are not adequate to prevent sediment from being tracked off site.

(k) During construction of an infiltration or biofiltration system, rigorous prevention and sediment controls must be used to prevent the discharge of sediment into the infiltration/biofiltration area. Infiltration/biofiltration areas must not be excavated to final grade until the contributing drainage area(s) has been constructed and finally stabilized.

(l) Dewatering or basin draining (e.g. pumped discharges, trench/ditch cuts for drainage) related to the construction activity that may have turbid or sediment laden discharge water must be discharged to a temporary or permanent sedimentation basin on the site whenever possible. If water cannot be discharged to a sedimentation basin prior to entering the surface water, it must be treated with the appropriate BMPs, such that the discharge does not adversely affect the receiving water or downstream landowners.

(m) If determined to be compacted by the District, site soils shall be decompacted to a depth of 18 inches and organic matter shall be incorporated before revegetation. Decompaction shall be

accomplished solely by incorporation of organic matter within the drip line or critical root zone of trees or within 10 feet of underground utilities.

(n) Inlet protection devices and all perimeter control shall be maintained once sediment accumulates to a depth 1/3 of the designed capacity.

10. NOTIFICATION AND INSPECTION.

(a) INSPECTION:

(1) The individual identified as being responsible for implementing the erosion control plan must routinely inspect the construction site once every seven days during active construction and within 24 hours after a rainfall event greater than 0.5 inches in 24 hours.

(2) All inspections and maintenance conducted during construction must be recorded in writing and these records must be retained with the erosion control plan and made available at the District's request within 24 hours. Records of each inspection and maintenance activity shall include:

(i) Date and time of inspections;

(ii) Name of person conduction inspections;

(iii) Findings of inspections, including recommendations for corrective actions;

(iv) Corrective actions taken (including dates, times and party completing maintenance activities); and

(v) Date and amount of all rainfall events greater than 0.5 inches in 24 hours.

(b) NOTIFICATION. The applicant or its authorized agent shall notify the District in writing at the following points (large public projects may request alternative notification through use of on an onsite written log of the following points):

(1) On completing installation of perimeter erosion and sedimentation controls.

(2) On completing land-disturbing activities and putting into place measures for final soil stabilization and revegetation.

(3) Prior to any site dewatering.

(4) When the site has been permanently stabilized and re-vegetated.

(5) When all temporary erosion and sedimentation controls have been removed from the site.

MINNEHAHA CREEK WATERSHED DISTRICT
BOARD OF MANAGERS

REVISIONS
PURSUANT TO MINNESOTA STATUTES §103D.341

Adopted May 26, 2011
Effective June 1, 2011

FINANCIAL ASSURANCES RULE

1. POLICY. It is the policy of the Board of Managers to:

(a) conserve the water resources of the District by assuring compliance with the District's rules in the performance of activities within the watershed; and

(b) require a financial assurance to be submitted with a permit application, conditioned on adequate performance of the authorized activities and compliance with District rules as an effective means to conserve the water resources of the District.

2. FINANCIAL ASSURANCE REQUIREMENT.

(a) A financial assurance instrument (performance bond, letter of credit, cash escrow deposit or other assurance) may be required as a condition of issuance of a permit under the District rules.

(b) A financial assurance will not be required of any agency of the United States or of any governmental unit or political subdivision of the state of Minnesota.

3. FINANCIAL ASSURANCE CRITERIA. The required amount and duration of financial assurances will be set by the Board of Managers by resolution and subject to periodic review and revision in consideration of the following criteria, which apply to all financial assurances required by the District rules. (The current schedule of financial assurance amounts and durations may be obtained from the District office or website: www.minnehahacreek.org.)

(a) Required amounts and durations of financial assurances will be set to ensure against potential liabilities to the District, including but not limited to:

(1) Application, field inspection, monitoring, consultant services and related fees authorized under Minn. Stat. § 103D.345;

(2) The cost of implementing and maintaining protective measures required by the permit; and

(3) The cost of remedying damage resulting from permit noncompliance or for which the permittee otherwise is responsible.

(b) The financial assurance instrument shall be in a form acceptable to the District. A commercial assurance must be issued by a surety licensed and doing business in Minnesota. (Templates may be obtained from the District office or website, www.minnehahacreek.org.)

(c) The financial assurance shall be issued in favor of the District and conditioned upon the applicant's performance of the activities authorized in the permit in compliance with the terms and conditions of the relevant permit(s) and all applicable laws, including the District rules, and payment when due of any fees or other charges authorized by law, including the District rules. The financial assurance shall state that in the event the conditions of the financial assurance are not met, the District may make a claim against it. In the event that the District makes a claim against a financial assurance, the District may require the full amount to be restored within 45 days.

(d) The financial assurance instrument shall contain a provision stating that it will not be canceled without at least thirty (30) days prior written notice to the District by the surety.

(e) Financial assurances shall be required of and submitted by the permit applicant, but the surety principal may be the landowner or the individual or entity undertaking the proposed activity.

(f) When a cash escrow is to be provided to fulfill District financial assurance requirements, the permittee/escrow provider will be required as a condition of permit issuance, transfer or renewal to enter into a cash escrow agreement with the District. Permit approval may be revoked for failure to comply with this requirement.

4. FINANCIAL ASSURANCE RELEASE.

(a) For a financial assurance covering a single project, on written notification of project completion, the District may inspect the project. If the project has been completed in accordance with the terms of the permit and District rules and there is no outstanding balance owed to the District for unpaid permit fees, the District will release the financial assurance. Final inspection compliance includes, but is not limited to, confirmation that the site has been vegetated and stabilized to prevent erosion and sedimentation in accordance with District rules and stormwater management features have been constructed or installed and are functioning as designed. If the District does not inspect the project and make a determination of the project's compliance with the above criteria within 45 days of District receipt of written notification of project completion, the financial assurance will become immediately eligible for release.

(1) The District may return a portion of a financial assurance submitted to assure performance if the District finds that the entire amount is no longer required to ensure compliance with the permit conditions and District rules. Specific District

rules may include additional criteria under which partial return of a performance assurance may be authorized.

(b) A financial assurance submitted to satisfy the financial assurance requirement for more than one permit will be released by the District on written request of the principal if the conditions listed in either of the following paragraphs are met:

(1) Pursuant to an inspection by the District of the final project covered by the assurance, the District determines that the project has been completed in accordance with the terms of the permit and District rules and there is no outstanding balance owed to the District for unpaid permit fees. If the District does not inspect the project and make a determination of the project's compliance with the above criteria within 45 days of District receipt of written notification of final project completion, the financial assurance will be immediately eligible for release.

(2) The applicant submits a new financial assurance in a form and amount satisfactory to the District.

MINNEHAHA CREEK WATERSHED DISTRICT
BOARD OF MANAGERS

REVISIONS
PURSUANT TO MINNESOTA STATUTES §103D.341

Adopted May 26, 2011
Effective June 1, 2011

PERMIT FEES RULE

1. FINDINGS. The Board of Managers finds that:

(a) public awareness of and compliance with the permitting process will be served by a policy of charging a minimal permit application fee. By encouraging applicants to seek permits for potential projects, the public benefits by reduced inspection and enforcement costs;

(b) it is in the public interest that large-scale development projects and activities in sensitive locations be inspected by District staff to provide the Board of Managers sufficient information to evaluate compliance with District rules and applicable law; and

(c) from time to time persons perform work requiring a permit from the District without a permit, and persons perform work in violation of an issued District permit. The Board finds that its costs of engineering, inspection and analysis in such cases exceed those where the applicant has complied with District requirements. The Board further concludes that watershed property owners subject to the District's annual tax levy should not pay costs incurred because of a failure to meet District requirements. Therefore, the Board adopts a rule charging fees to the responsible persons in such cases.

2. FEES.

(a) The District will charge applicants an initial permit processing fee in accordance with a schedule set, and revised from time to time, by resolution of the Board of Managers to account for the expected processing and initial inspection costs based on the type and extent of the proposed activities and the applicable rule requirements. A permit application will not be deemed complete and will not be acted on by the District until the permit processing fee is paid. A current fee schedule may be obtained from the District web site at www.minnehahacreek.org.

(b) Beyond the initial permit processing fee, permit applicants will be charged the District's actual costs of administering and enforcing permits, as well as the actual costs of field inspections or investigations of the area affected by a proposed activity, analysis of the proposed activity, and engineering and other technical analysis, legal fees and costs and administrative expenses, as well as any monitoring of permitted activities required.

Applicants and permittees will be invoiced for all costs described by this paragraph incurred by the District beyond the permit processing fee.

(c) In accordance with section 5 of the Enforcement Rule, permittees will be liable for enforcement costs incurred by the District, including but not limited to the costs of inspection and monitoring of compliance, engineering and other technical analysis, legal fees and costs, and administrative expenses. Applicants and permittees will be invoiced for all costs described by this paragraph incurred by the District.

(d) An invoice issued in accordance with the provisions of this rule must be paid within thirty (30) days from the receipt. Failure to pay a District permitting-fees invoice will constitute a failure to comply with District permit-application requirements or a violation of the terms of an issued permit, and the Board of Managers may deny a permit application or revoke a permit based on nonpayment of fees.

3. RECOVERY OF FEE. The fees provided for in this rule may be recovered by the District by any legal action authorized by law.

4. GOVERNMENTAL AGENCIES EXEMPT. No permit fee will be charged to any agency of the United States or any governmental unit in the State of Minnesota.

MINNEHAHA CREEK WATERSHED DISTRICT
BOARD OF MANAGERS

REVISIONS
PURSUANT TO MINNESOTA STATUTES § 103D.341

Adopted April 24, 2014
Effective June 6, 2014

PROCEDURAL REQUIREMENTS RULE

1. APPLICATION REQUIRED. Any person undertaking an activity for which a permit is required by these rules shall first submit a permit application to the District. The application must include all exhibits required by applicable District rules. All permit applications must bear the original signature of the landowner. (Applications signed electronically in accordance with protocols published by the District will be accepted.)

(a) Applicants are encouraged to submit preliminary plans early in the project-development process for nonbinding, informal review for conformity with District policies and rules;

(b) An interested person may intervene in a permit proceeding by filing a written request to intervene with the District before the final decision on the application. The request shall state the nature of the person's interest and a copy shall be hand-delivered to the applicant or received at the applicant's address stated in the application before the time of the final decision. An intervener shall have the rights of a party in the proceeding before the District.

(c) A permit applicant consents to entry and inspection of the subject parcel by the District and its authorized agents at reasonable times as necessary to evaluate the permit application or determine compliance with the requirements of a District permit or rule.

2. FORMS. Only permit applications using the applicable District form(s) will be accepted. A request for a variance or exception from any District rule provision(s) must be submitted on the District variance or exception form. District application forms are available from the Permits section of the District web site (www.minnehahacreek.org). Permit applications sent by mail must be addressed to:

Minnehaha Creek Watershed District
15320 Minnetonka Blvd.
Deephaven, MN 55345
Attn: Permitting

3. FEES. District permit fees are set forth in the District Permit Fees Rule. A permit application is incomplete and will not be processed by the District until the applicable fees are paid. Failure to timely pay fees is grounds for permit revocation.

4. ACTION ON PERMIT APPLICATION. Permit decisions will be made by the Board of Managers except as delegated to staff by written resolution. The Board will review a staff permit decision on the applicant's request. Variance requests will be acted on by the Board pursuant to the Variances and Exceptions Rule. The District may approve or deny an application and may impose reasonable conditions on approval. Conditions may include, as otherwise consistent with the rules, requirements for financial assurances, maintenance agreements and declarations and may require that these documents be properly executed or recorded before permit issuance.

The District may reconsider and revoke a permit if it finds that a material error or misrepresentation was made in the application and that the correct information was available at the time of the application. The District may suspend or revoke a permit if preliminary or final subdivision approvals received from the relevant municipality or county are not consistent with the conditions of the permit.

In the event of a material change from approved plans or specifications after conditional or final District approval of an application, a permittee must submit information necessary for the District to reevaluate compliance with District rules.

5. CONFORMITY WITH MUNICIPAL PLAN. The District will review applications for permits involving land development only after the applicant demonstrates that the plan has received preliminary approval from each municipality in which development is to take place. The requirement of preliminary municipal approval shall mean: (a) Preliminary plat approval if required for the development; or (b) if plat approval is not required, approval by the municipal planning commission or a written statement from the responsible municipal official that the development meets municipal approval requirements.

6. NOTIFICATION. Persons applying for a District permit must supply a certified list of property owners and mailing labels for each property within 600 feet of the parcel on which the proposed project is to occur. Certified lists may be obtained from county property information services. At the request of the applicant and at the applicant's expense, the District will supply the mailing list and labels. District staff will send notice of the proposed project to the individuals on the mailing list for the applicant at the applicant's expense. A copy of the list will be retained with the application at the District office. The application will not be deemed complete and will not be processed until the list has been submitted to the District or the applicant has requested the applicable list and labels from the District. Notification is not required for a Fast Track permit under the Erosion Control, Floodplain Alteration, Dredging and Shoreline & Streambank Stabilization rules.

7. ALTERNATIVE NOTIFICATION. The District, on written request, may approve alternative notification for any of the following projects:

(a) A linear project, including but not limited to a road, sidewalk or trail, one-half mile or more in length.

(b) A project on a parcel or contiguous parcels with an area of 100 acres or more, where no more than five percent of the area will be disturbed, provided the disturbed area does not include a wetland.

(c) A project where the applicant proposes to combine notification under this rule with notification required under the approval procedures of another governmental body. The applicant must demonstrate that an alternative means of notification will provide adequate notice to residents near the proposed activity.

8. TIME FOR SUBMITTAL. A complete permit application which includes all required exhibits shall be received by the District at least 21 full days prior to the scheduled meeting date of the Board of Managers. Late submittals or submittals with incomplete exhibits will be scheduled to a subsequent meeting date.

9. PERMIT RENEWALS AND TRANSFERS. A permit is valid for one year from the date the applicant is advised in writing that the District has approved the permit unless the permit is suspended or revoked, except that the general permit established under the Appropriations Rule does not expire and a property owner continues to qualify for coverage under the general permit as long as the applicable criteria are met. The valid period of a permit is not extended while the applicant complies with conditions precedent to actual issuance of the permit. To renew or transfer a permit, the permittee must notify the District in writing, prior to the permit expiration date, of the reason for the renewal or transfer request. The District may impose different or additional conditions on a renewal or deny the renewal in the event of a material change in circumstances. On the first renewal, a permit will not be subject to additional or different requirements solely because of a change in District rules. New or revised rule requirements will not be imposed on renewal of a permit where the permittee has made substantial progress toward completion of the permitted work . A transfer shall be approved unless the District finds that the proposed transferee has not demonstrated the ability to perform the authorized work in accordance with the conditions of the permit, in which case the Board may impose conditions on or deny the transfer. Permit transfer does not extend the permit term.

10. BASIS FOR DECISIONS. All interpretations of these rules and permit decisions under these rules will incorporate and be consistent with District purposes set forth in Minnesota Statutes sections 103B.201 and 103D.201.

MINNEHAHA CREEK WATERSHED DISTRICT
BOARD OF MANAGERS

REVISIONS
PURSUANT TO MINNESOTA STATUTES §103D.341

Adopted May 26, 2011
Effective June 1, 2011

VARIANCES AND EXCEPTIONS RULE

1. VARIANCES AUTHORIZED. The Board of Managers may hear requests for variances from strict compliance with provisions of the District rules.

2. STANDARD. To grant a variance, the Board of Managers must determine, based on a showing by the applicant:

(a) that because of special conditions inherent to the property, which do not apply generally to other land or structures in the District, strict compliance with a provision of a District rule will cause undue hardship to the applicant or property owner;

(b) that the hardship was not created by the landowner, the landowner's agent or representative, or a contractor. Economic hardship is not grounds for issuing a variance;

(c) that granting such variance will not merely serve as a convenience to the applicant,

(d) that there is no feasible and prudent alternative to the proposed activity requiring the variance; and

(e) that granting the variance will not impair or be contrary to the intent of these rules.

3. TERM. A variance or exception will remain valid only as long as the underlying permit remains valid.

4. VIOLATION. A violation of any condition of approval of a permit subject to a variance shall constitute grounds for termination of the variance.

5. EXCEPTIONS. The Board of Managers may grant an exception from a provision of these rules requiring a particular treatment or management method, or setting forth a design specification of such a method, on a determination that the proposed application, with such further conditions as the Board may impose, will achieve a greater degree of water resource protection than would strict compliance with the provision.

6. SUPERMAJORITY REQUIREMENT. A variance or exception must be approved by a two-thirds majority of managers voting.

MINNEHAHA CREEK WATERSHED DISTRICT
BOARD OF MANAGERS

REVISIONS
PURSUANT TO MINNESOTA STATUTES § 103D.341

Adopted April 24, 2014
Effective June 6, 2014

STORMWATER MANAGEMENT RULE

1. POLICY. It is the policy of the Board of Managers to:

(a) Promote abstraction of precipitation and stormwater runoff where feasible for the purposes of improving water quality, increasing groundwater recharge, reducing flooding, and promoting the health of native and designed plant communities and landscapes;

(b) Preserve, maintain and improve the aesthetic, physical, chemical and biological composition of surface waters and groundwater within the District;

(c) Limit or reduce stormwater runoff from drainage within the watershed to decrease the negative effects of land-disturbing activities on surface water quality and flooding;

(d) Protect and maintain existing groundwater flow, promote groundwater recharge and improve groundwater quality and aquifer protection;

(e) Promote the preservation and use of native vegetation for the purpose of stormwater runoff abstraction and pollutant load reduction;

(f) Promote nondegradation of water quality from new development and improvement in water quality from redevelopment; and

(g) Promote the management of stormwater on site for the purposes of providing local groundwater recharge and maintaining natural hydrology.

2. REGULATION. No one may create new or replace existing impervious surface or change the contours of a parcel of land in a way that affects the direction, peak rate, volume, or water quality of runoff flows from the parcel or subdivide a parcel of one acre or more in size into three or more lots without first submitting a stormwater management plan to the District and securing a permit from the District approving the plan. New development is subject to sections 3 and 7-11 below (see Table 2). Redevelopment is subject to sections 3-5 and 7-11 below (see Tables 3 and 4). Subdivision of land is subject to section 3-5 and 7-11, as applicable. Linear Transportation Projects are subject to sections 3 and 6-11 below (see Table 5).

Activity subject to this rule on adjacent sites under common or related ownership shall be considered in the aggregate, and the requirements applicable to the activity under this rule will be

determined with respect to all development that has occurred on a site, or on adjacent sites under common or related ownership, since the date this rule took effect (January 2005).

The following activities are exempt from this rule:

(a) SINGLE FAMILY HOMES: Construction or reconstruction of a single- family home.

(b) NEW DEVELOPMENT: New development for a residential, commercial, industrial or institutional use (see Table 2):

(1) that will result in less than 20 percent impervious surface over the site; or

(2) on a site of less than one acre.

(c) REDEVELOPMENT: Redevelopment for a residential, commercial, industrial or institutional use (see Table 3):

(1) on a site that is less than five acres in size that will result in at least a ten percent reduction in impervious surface; or

(2) on a site of five acres or greater where the proposed activity disturbs less than 40 percent of the site and results in at least a ten percent reduction in impervious surface.

(d) LINEAR TRANSPORTATION PROJECTS: Construction of a new or reconstruction of an existing road, trail, sidewalk, utility, or other linear transportation project (see Table 5):

(1) that will create less than 10,000 square feet of new impervious surface; or

(2) for the construction of sidewalks and trails that will not exceed 12 feet in width and will be bordered on the downgradient side(s) by a pervious buffer averaging at least one-half the width of the sidewalk or trail.

3. STORMWATER MANAGEMENT PLAN GENERAL REQUIREMENTS. A stormwater management plan submitted to the District must meet the following requirements, subject to the provisions in sections 4-8:

(a) PHOSPHORUS CONTROL.

(1) NEW DEVELOPMENT/LINEAR TRANSPORTATION PROJECTS: Activity subject to this rule for new development or linear transportation projects shall result in no net increase in phosphorus loading from existing conditions, except that:

i. For a parcel in existing use for row crop agriculture or feedlot, new development shall result in no net increase in phosphorus loading from the site as modeled in meadow condition.

(2) REDEVELOPMENT: Phosphorus control must be provided in accordance with subsection 3(c)(2), where applicable.

(b) RATE CONTROL.

(1) Activity subject to this rule shall result in no net increase in the peak runoff rate for the 1-, 10- and 100-year design storms where stormwater discharges across the downgradient site boundary, compared to the rate for the site in its existing condition, except that:

i. For a parcel in use for row crop agriculture or feedlot, new development shall result in no net increase in the peak runoff rate from the site as modeled in meadow condition.

(2) Peak runoff rates for the 1-, 10- and 100-year design storms may not increase within a specific drainage area of the site so as to create or exacerbate drainage or erosion problems.

(c) VOLUME CONTROL.

(1) The stormwater management plan must provide for the abstraction of the first one inch of rainfall from the site's impervious surface. Credit toward compliance with the one inch volume control standard will be calculated by the applicant using industry accepted hydrologic models and Appendix A: Volume Abstraction Credit Schedule, following guidance provided in the Minnesota Pollution Control Agency's *Minnesota Stormwater Manual*.

(2) Where an applicant demonstrates that it is infeasible to meet the one inch abstraction requirement through use of volume control credits pursuant to subsection 3(c)(1), the stormwater management plan must provide for abstraction of runoff to the greatest extent feasible, and at least 0.5 inches, and phosphorus control in an amount equivalent to that which would be achieved through abstraction of one inch of rainfall from the site's impervious surfaces. To demonstrate infeasibility of providing abstraction pursuant to 3(c)(1), the applicant must submit a completed Abstraction Analysis containing at a minimum the following information:

i. A narrative that lists and explains the variables that limit the feasibility of providing one inch of volume control for runoff from the site's impervious surface. These variables may include but are not limited to unified soil classification, soil contamination, proximity to bedrock,

proximity to groundwater, proximity to existing utilities, spatial constraints, zoning requirements, and financial considerations.

ii. A narrative and conceptual plan(s) that describes and discusses how reasonable modifications to the size, scope, configuration or density of the project would influence the feasibility of providing one inch of volume control for runoff from the sites impervious surface.

iii. An explanation of efforts undertaken by the applicant to accommodate or remove the constraints that influence the feasibility of providing one inch of volume control for runoff from the site's impervious surface.

(3) The volume of runoff draining to a landlocked receiving area may not increase due to a project unless the applicant can demonstrate that any additional runoff volume from the project will be effectively abstracted. In addition, the applicant shall either own or have proper rights over the landlocked property receiving runoff from the project area. Back-to-back 100-year runoff events will be used to analyze holding capacity and high-water elevation for landlocked areas.

(d) BEST MANAGEMENT PRACTICES (BMPs).

(1) BMPs addressing the potential water resource impacts associated with the proposed activity must be incorporated to limit creation of impervious surface, maintain or enhance on-site infiltration and peak flow control and limit pollutant generation on and discharge from the site. BMPs may include site design, structural and non-structural practices.

(2) BMPs must be designed and installed in accordance with generally accepted design practices and guidance contained in the Minnesota Pollution Control Agency's *Minnesota Stormwater Manual* and its subsequent revisions.

(e) HIGH WATER ELEVATION.

(1) All applications shall provide at least two vertical feet of separation between low openings of structures and the 100-year high water elevations of stormwater BMPs and waterbodies.

4. REDEVELOPMENT REQUIREMENTS – DECREASE OR NO CHANGE IN IMPERVIOUS SURFACE. A stormwater management plan submitted to the District that proposes through redevelopment to decrease or result in no net increase in impervious surface must meet the following requirements (see Table 3):

(a) For sites that are one acre or less, Best Management Practices are required in accordance with subsection 3(d);

(b) For sites that are between one acre and five acres and the proposed activity disturbs less than 40 percent of the site, Best Management Practices are required in accordance with subsection 3(d);

(c) For sites that are between one acre and five acres and the proposed activity disturbs 40 percent or more of the site, the stormwater management plan must meet the volume control requirement in subsection 3(c) and the phosphorus control requirement in subsection 3(a)(2), where applicable;

(d) For sites that are greater than five acres and the proposed activity disturbs less than 40 percent of the site, Best Management Practices are required in accordance with subsection 3(d);

(e) For sites that are greater than five acres and the proposed activity disturbs 40 percent or more of the site, the stormwater management plan must meet the volume control requirement in subsection 3(c) and the phosphorus control requirement in subsection 3(a)(2), where applicable.

5. REDEVELOPMENT REQUIREMENTS – INCREASED IMPERVIOUS SURFACE. A stormwater management plan submitted to the District that proposes to increase impervious surface through redevelopment must meet the following requirements (see Table 4):

(a) For sites that are one acre or less, Best Management Practices are required in accordance with subsection 3(d);

(b) For sites that are greater than one acre and the proposed activity disturbs less than 40 percent of the site and results in an increase in impervious surface of less than 50 percent, the phosphorus control requirements of subsection 3 (a), rate control requirements of subsection 3(b) and volume control requirements of subsection 3(c) apply to the area of increased impervious surface;

(c) For sites that are greater than one acre and the proposed activity disturbs 40 percent or more of the site, or results in an increase in impervious surface of 50 percent or more, the phosphorus control requirements of subsection 3(a), rate control requirements of subsection 3(b), and volume control requirements of subsection 3(c) apply to the entire site.

6. LINEAR TRANSPORTATION PROJECT REQUIREMENTS (see Table 5).

(a) The construction of a new road, trail, sidewalk, utility, or other linear transportation project that will create 10,000 square feet or more of impervious surface must meet the phosphorus control requirements in accordance with subsection 3(a), rate control requirements in accordance with subsection 3(b) and volume control requirements in accordance with subsection 3(c);

(b) Linear Reconstruction Projects that will increase the impervious area within the project limits by between 10,000 square feet and one acre from existing conditions must meet the phosphorus control requirements in accordance with subsection 3(a) and rate control requirements in accordance with subsection 3(b) for the area of increased impervious surface;

(c) Linear Reconstruction Projects that will increase the impervious area within the project limits by one acre or more from existing conditions must meet the phosphorus control requirements in accordance with subsection 3(a), rate control requirements in accordance with subsection 3(b), and volume control requirements in accordance with subsection 3(c) for the area of increased impervious surface.

7. REGIONAL STORMWATER MANAGEMENT.

(a) An applicant may comply with this rule by providing equal or greater phosphorus control, rate control, or volume control through a regional or subwatershed plan approved by the District; such a plan must provide for an annual accounting to the District of treatment capacity created and utilized by projects or land-disturbing activities within the drainage and treatment area of the plan.

(b) District approval of a regional or subwatershed plan will be based on a determination that:

(1) the use of a regional facility in place of onsite stormwater management will not result in adverse impacts to local groundwater or natural resources located upstream of the regional facility, including, but not limited to, reduced water quality, altered wetland hydrology, changes to stream velocities or baseflow, erosion, or reduced groundwater recharge; and

(2) the plan incorporates onsite BMPs as necessary to mitigate impacts and provide local benefits not provided by the regional facility.

(c) Individual project sites utilizing a regional facility to meet phosphorus, rate, or volume control requirements must incorporate BMPs on the project site in accordance with subsection 3(d).

(d) The applicant, before commencing any land-altering activity, must demonstrate that it holds the legal rights necessary to discharge to the stormwater facility or facilities in the plan, and that the facility or facilities are subject to a maintenance document satisfying the requirements of section 11.

8. IMPACT ON DOWNSTREAM WATERBODIES.

(a) No new point source may discharge to a waterbody without pretreatment for sediment and nutrient removal. Pretreatment may be provided by non-structural means. An activity changing flow that discharges from an existing point source is not a new point source.

(b) No activity subject to this rule may alter a site in a manner that results in a(n):

(1) Increase in the bounce in water level for any downstream lake or wetland beyond the limits specified in Table 1 below based on management classification, during a rainfall event of critical duration with a return frequency of 1, 10, or 100 years.

(2) Increase in the duration of inundation for any downstream lake or wetland beyond the limits specified in Table 1 below based on management classification, during a precipitation event of critical duration with a return frequency of 1, 10, or 100 years.

(3) Change in the elevation of the runout control of any lake or wetland beyond the limits specified in Table 1 below based on management classification.

Table 1: Impacts on downstream waterbodies

Wetland Management Class/ Waterbody	**Permitted Bounce for 1-, 10-, and 100-Year Event**	**Inundation Period for 1-Year Event**	**Inundation Period for 10- and 100-Year Event**	**Runout Control Elevation**
Preserve	Existing	Existing	Existing	No change
Manage 1	Existing plus 0.5 feet	Existing plus 1 day	Existing plus 2 days	No change
Manage 2	Existing plus 1.0 feet	Existing plus 2 days	Existing plus 14 days	0 to 1.0 ft above existing runout
Manage 3	No limit	Existing plus 7 days	Existing plus 21 days	0 to 4.0 ft above existing runout
Lakes	Existing	N/A	N/A	No change

9. FINANCIAL ASSURANCE.

(a) A performance bond, letter of credit or other financial assurance, consistent with the District Financial Assurance Rule, may be required for any project that requires the installation of stormwater best management practices. The financial assurance shall be maintained until the stormwater best management practice has been constructed and stabilized in accordance with District rules and as shown on a set of as built drawings submitted to the District.

10. REQUIRED EXHIBITS.

(a) Plans certified by a professional engineer registered in the State of Minnesota and reflecting the following items shall accompany the permit application (one set of plans must be full size; one set must be reduced to a maximum size of 11" x 17"; provide electronic ArcGIS or CADD files when available):

(1) Property lines and delineation of lands under ownership of the applicant.

(2) Delineation of the subwatershed contributing runoff from off-site and proposed and existing subwatersheds on-site.

(3) Proposed and existing locations, alignments, and elevations of stormwater facilities.

(4) Delineation of existing on-site wetland, shoreland, and/or floodplain areas.

(5) Existing and proposed normal, and 100 year high water elevations on-site.

(6) Existing and proposed site contour elevations at two foot intervals, related to National Geodetic Vertical Datum (NGVD), 1929 datum.

(7) Construction plans and specifications for all proposed stormwater management facilities.

(8) Stormwater runoff volume and rate analyses for the 1-, 10- and 100- year design storms for existing and proposed conditions.

(9) All hydrologic, water quality, and hydraulic computations completed to design the proposed stormwater management facilities including runoff volume abstractions.

(10) Delineation of any flowage easements or other property interests dedicated to stormwater management purposes, including, but not limited to, county or judicial ditches.

(b) For applications proposing infiltration, a soil sampling plan and the resulting identification, description, permeability, and approximate delineation of site soils. Investigation methods shall include soil pits or hand augers. Borings at the location of the infiltration facility must extend at least five feet deeper than the proposed bottom elevation of the infiltration facility.

(c) For applications proposing tree preservation or planting, a site map showing existing trees larger than six inches in diameter, including species, diameter, and associated drip lines (canopy area). Tree map must designate trees to be removed and trees to be added.

(d) For applications proposing soil amendments, a soil amendment plan following guidance from the Minnesota Pollution Control Agency's *Minnesota Stormwater Manual*.

(e) For applications proposing capture and reuse, an operating plan and calculations that quantify the benefits of the proposed stormwater reuse system.

(f) Documentation indicating conformance with an existing municipal stormwater management plan. When a municipal plan does not exist, documentation that the municipality has reviewed the project.

(g) Documentation that the applicant has applied for a National Pollutant Discharge Elimination System (NPDES) Permit if required by the Minnesota Pollution Control Agency (MPCA).

(h) Abstraction analysis (if applicable) in accordance with subsection 3(c)(2).

(i) A declaration and maintenance agreement in conformance with section 11.

11. MAINTENANCE.

(a) All stormwater management structures and facilities must be designed for maintenance access and properly maintained in perpetuity to assure that they continue to function as designed. Permit applicants must provide a maintenance plan that identifies and protects the design, capacity and functionality of onsite and offsite stormwater management facilities; specifies the methods, schedule and responsible parties for maintenance; provides for the maintenance in perpetuity of the facility; and contains at a minimum the requirements in the District's standard maintenance declaration. The plan will be recorded on the deed in a form acceptable to the District. A public entity assuming the maintenance obligation may do so by filing with the District a document signed by an official with authority.

Table 2: Stormwater management requirements for new development

Site Size	Impervious Surface	Requirements
< 1 acre	N/A	None
≥ 1 acre	< 20% of site	None
	≥ 20% of site	Phosphorus Control, Rate Control, and Volume Control

Table 3: Stormwater management requirements for redevelopment resulting in a decrease or no change in impervious surface

Site Size	Site Disturbance	Impervious Surface Reduction	Requirements
≤ 1 acre	N/A	10% reduction in impervious surface	None
		0 - 9% reduction in impervious surface	Incorporate BMPs
> 1 acre - ≤ 5 acres	< 40% site disturbance	10% reduction in impervious surface	None
		0 - 9% reduction in impervious surface	Incorporate BMPs
	≥ 40% site disturbance	10% reduction in impervious surface	None
		0 - 9% reduction in impervious surface	Volume control required for site's impervious surface
> 5 acres	< 40% site disturbance	10% reduction in impervious surface	None
		0 - 9% reduction in impervious surface	Incorporate BMPs
	≥ 40% site disturbance	N/A	Volume control required for site's impervious surface

Table 4: Stormwater management requirements for redevelopment resulting in an increase in impervious surface

Site Size	Site Disturbance	Impervious Surface Increase	Requirements	Treatment Scope
≤ 1 acre	N/A	N/A	Incorporate BMPs	N/A
> 1 acre	< 40% site disturbance	< 50% increase in impervious surface	Phosphorus Control, Rate Control, and Volume Control	Additional impervious surface
		≥ 50% increase in impervious surface		Entire site's impervious surface
	≥ 40% site disturbance	N/A	Phosphorus Control, Rate Control, and Volume Control	Entire site's impervious surface

Table 5: Stormwater management requirements for linear transportation projects

Project Type	Impervious Surface Increase	Requirements	Treatment Scope
New Linear Transportation Project	< 10,000 square feet	None	N/A
	≥ 10,000 square feet	Phosphorus Control, Rate Control, and Volume Control	New impervious surface
Linear Reconstruction Project	< 10,000 square feet	None	N/A
	≥ 10,000 square feet and < 1 acre	Phosphorus Control and Rate Control	Additional impervious surface
	≥ 1 acre	Phosphorus Control, Rate Control, and Volume Control	Additional impervious surface

APPENDIX A:
MCWD Volume Abstraction Credit Schedule

Practice	Design Guidance	Credit	Calculation Methods
Surface Infiltration Basin	*Minnesota Stormwater Manual*	Volume provided	AV[1] = Volume below overflow elevation [2]
Underground Infiltration Trench	*Minnesota Stormwater Manual*	Void volume provided	AV = Volume below overflow elevation [2]
Preservation of tree(s)	Not Applicable	Percent interception by species	AV = % Interception [3] * tree canopy area [4] * 1 inch rainfall
Planting of New Tree(s)	Not Applicable	One-half percent interception by species [5]	AV = 0.5 * % Interception [3] * tree canopy area [4] * 1 inch rainfall
Soil Amendment(s)	*Minnesota Stormwater Manual*	0.5-inch credit over the area of soil amendment area [6]	AV = 0.5/12 * area of soil amendment
Capture and Reuse of Stormwater	Submit pump design plans and hydrologic calculations	Volume capacity to capture and reuse runoff from a 1-inch rainfall event	Submit operating plan and calculations for reuse system to document annual volume reuse during dry, wet, and average years
Enhancement of Pervious Area [7] (wetland buffers, forest or prairie conservation or restoration)	Submit vegetation planting and maintenance plan	0.5-inch credit over the area of enhancement [8]	AV = 0.5/12 * area of enhancement
Filtration	*Minnesota Stormwater Manual*	50% volume abstraction credit [9]	AV = 0.5 * Volume below overflow elevation (filtered volume is not considered)

(1) AV = Abstraction Volume
(2) Volume infiltrated during a rainfall event shall not be credited towards the abstraction volume requirement. This is a simple approach for designers and for reviewers to verify conformance to the standard; a stormwater model is not needed for calculations. This is a conservative assumption because infiltration of stormwater in Minnesota is an evolving practice. MCWD will continue to research current trends, collect and analyze monitoring data, and utilize modeling and engineering methods to assess the effectiveness of the standards to achieve the water quality goals of the District.
(3) Percent rainfall interception shall be determined using results from the *City of Minneapolis, Minnesota Municipal Tree Resource Analysis*. Percentages for the species studied are listed below. If desired tree species is not listed, the applicant shall use the median value provided below or provide documentation by a certified arborist to support a different percent interception.

Average Percent Rainfall Interception by Tree Species

Species	Average Percent Rainfall Interception
Green Ash	13
Sugar Maple	8
Norway Maple	8
Littleleaf Linden	12
American Elm	18
Honeylocust	6
American Basswood	10
Northern Hackberry	6
Ginkgo	4
Silver Maple	16
Elm	21
White Ash	10
Basswood	14
Red Maple	7
Median	10

(4) Tree canopy area must be documented as part of the permit application submittal.
(5) Granting ½ credit for new trees is intended to encourage preservation of trees over tree removal and replacement.
(6) For SCS TR-55 cover type "open space (lawns)," compacted soil (HSG C, curve number 74) begins to generate runoff with a 0.9-inch rainfall. A HSG B soil (curve number 61) begins to generate runoff with a 1.5-inch rainfall. Therefore, preserving the infiltration capacity of HSG B soil through the use of soil amendments yields an approximate 0.5-inch volume reduction credit.
(7) Area shall not be subject to motorized vehicle, bicycle, or likely human foot traffic (i.e., parking lot islands, conventional landscaping).
(8) For SCS TR-55 cover type "herbaceous mixture," additional rainfall of approximately 0.5 inches generates no runoff if the hydrologic condition is improved from "fair" to "good." Credit will not be granted for "tree preservation" and "enhancement of pervious area." The applicant must designate the desired abstraction practice.
(9) The *Minnesota Stormwater Manual* reports that nutrient removal (total phosphorus) is approximately half as effective for filtration as infiltration.

MINNEHAHA CREEK WATERSHED DISTRICT
BOARD OF MANAGERS

REVISIONS
PURSUANT TO MINNESOTA STATUTES § 103d.341

Adopted April 24, 2014
Effective June 6, 2014

WATERBODY CROSSINGS & STRUCTURES

1. POLICY. It is the policy of the Board of Managers to:

(a) Discourage the use of beds and banks of waterbodies for the placement of roads, highways, and utilities

(b) Preserve the ecological integrity of the riparian and aquatic environment, including wildlife and fisheries habitat, and recreational water resources; and

(c) Encourage improvement of wildlife passage and habitat, especially for larger projects involving culverts and public right of way in or near natural corridors.

2. REGULATION. No person shall conduct horizontal drilling under or place a road, highway, utility, bridge, boardwalk or associated structure in contact with the bed or bank of any waterbody, including alteration of a waterbody to enclose it within a pipe or culvert, within the District without first securing a permit from the District.

3. CRITERIA. Use of the bed or bank:

(a) Shall meet a demonstrated public benefit for projects involving crossings or structures in public waters, and meet a demonstrated specific need for all other projects;

(b) Shall retain adequate hydraulic capacity:

(1) For watercourses, changes in hydraulic capacity may not result in upstream or downstream increases in flood stage.

(c) Shall retain adequate navigational capacity pursuant to any requirements of the waterbody's classification by the District;

(d) Shall preserve aquatic and upland wildlife passage along each bank and within the waterbody as follows:

(1) Where there is sufficient depth and width, waterbody crossings shall provide upland bank passage to the greatest extent feasible, graded to connect to the streambank on both the upstream and downstream ends;

(2) Where the depth or the width of is not sufficient to provide adequate upland bank passage, waterbody crossings shall provide multiple offset culverts;

(3) Where the multiple offset culverts are not feasible, waterbody crossings shall provide a wildlife shelf insert above bankful height, unless such a structure will impact hydraulic capacity;

(4) Rural section low traffic roads that meet vertical and horizontal site distances for a vehicle speed of 40 mph or less in Table 1, are exempt from the requirements of 3(d)(3).

(e) Shall not adversely affect water quality;

(f) Shall represent the "minimal impact" solution to a specific need with respect to all other reasonable alternatives, including, but not limited to vegetation or bioengineering for bank stabilization, structural bank stabilization (riprap, retaining walls), acquisition of additional easements, or installation of upstream controls to manage stream flow. The term "minimal impact" shall refer to all resources protected under the purposes of the District set forth at sections 103B.201 and 103D.201 of the Minnesota Statutes; and

(g) Shall provide for minimum clearance of 3 feet below the bed of a waterbody, and a minimum setback of 100 feet from any stream bank for pilot, entrance, and exit holes, for projects involving horizontal directional drilling.

(h) Shall provide a design for avoiding sanitary discharge to a surface water in the event of a sanitary sewer breakage through use of valves, diversions, redundant pipes or other means.

4. EXCEPTION. The requirements of this rule may be waived upon a determination by the Board of Managers that a waterbody has been significantly altered from a natural state and degraded and that the proposed application would provide ecological restoration and a greater degree of resource protection than would strict compliance with the rule.

5. REQUIRED EXHIBITS. The following exhibits shall accompany the permit application. One set - full size; one set - reduced to maximum size of 11"x17".

(a) Construction plans and specifications.

(b) Analysis prepared by a professional engineer or qualified hydrologist showing

the effect of the project on hydraulic capacity and water quality.

(c) A temporary and permanent erosion control plan.

(d) Information necessary to evaluate impacts under paragraph 3(f), including at least two alternative designs that minimize or avoid the proposed impact(s), and such other information as determined by District staff in consultation with the applicant.

6. MAINTENANCE. A declaration or other recordable instrument stating terms for maintenance of hydraulic and navigational capacity and approved by the District shall be recorded in the office of the county recorder or registrar before activity under the MCWD permit commences. In lieu of recordation, a public permittee or a permittee without a property interest sufficient for recordation may assume the maintenance obligation by means of a written agreement with the District. The agreement shall state that if the ownership of the structure is transferred, the public body shall require the transferee to comply with this subsection.

MINNEHAHA CREEK WATERSHED DISTRICT
BOARD OF MANAGERS

REVISIONS
PURSUANT TO MINNESOTA STATUTES §103D.341

Adopted April 24, 2014
Effective June 6, 2014

SHORELINE & STREAMBANK STABILIZATION RULE

1. POLICY. It is the policy of the Board of Managers to:

(a) Preserve the natural appearance of shoreline and streambank areas;

(b) Encourage and foster bioengineering, landscaping and preservation of natural vegetation as preferred means of stabilizing shorelines and streambanks;

(c) Assure that improvement of shoreline and streambank areas to prevent erosion complies with accepted engineering principles in conformity with Minnesota Department of Natural Resources construction guidelines; and

(d) Preserve water quality and the ecological integrity of the riparian environment, including wildlife, fisheries, and recreational water resources.

2. REGULATION.

(a) No person shall install an improvement or alteration of the shoreline of a water basin or the bank of a watercourse, including but not limited to a bioengineered installation, riprap, a retaining wall, a sand blanket or a boat ramp, without first securing a permit under this rule and providing a financial assurance pursuant to the District Financial Assurance Rule. Planting of vegetation not intended to provide deep soil structure stability does not require a permit under this rule.

(b) All permit applications submitted under this rule, except applications for maintenance of an existing improvement that has not degraded to a natural state, shall be required to include a detailed erosion intensity calculation of the shoreline or streambank in accordance with section 3, Shoreline Erosion Intensity Calculation (for shorelines), or section 4, Streambank Erosion Intensity Calculation (for streambanks), of this rule.

(c) A permit under this rule is required for maintenance of an existing riprap or otherwise hard-armored shoreline or streambank that involves the addition of new material or structural change to the improvement. No permit under this rule is required for maintenance of an existing shoreline or streambank improvement that involves in-kind replacement or restoration of the improvement in compliance with the criteria in this rule.

(d) A Fast Track permit may be issued for shoreline stabilization projects that conform to the requirements in section 6, Criteria for Stabilization Techniques, of this rule.

(e) Shoreline or streambank stabilization projects that do not utilize a stabilization practice consistent with the erosion intensity calculation shall be required to document compliance with the design flexibility/minimal impact standard in section 5, Design Flexibility. Such projects shall be subject to the public notice requirements of the District Procedural Requirements Rule.

(f) A Fast Track permit may be issued for routine sand blanket projects that conform to the requirements set forth in sections 8, Criteria for Laying Sand blankets, and 9, Sand blankets Required Exhibits, of this rule.

3. SHORELINE EROSION INTENSITY CALCULATION.

(a) Applications for shoreline stabilization shall be required to complete the Erosion Intensity Scoresheet to document the shoreline erosion intensity (low, medium, high). The Erosion Intensity Scoresheet will be maintained and periodically updated to account for changing conditions and improved understanding of shoreline erosion factors and approved by the Board of Managers by resolution. (The current Erosion Intensity Scoresheet may be obtained from the District office or the permitting section of the District website: www.minnehahacreek.org.)

(b) The proposed shoreline stabilization practice shall be consistent with the shoreline erosion intensity calculated (low, medium, high).

(1) Low erosion intensity shorelines shall utilize biological stabilization practices in accordance with section 6, Criteria for Stabilization Techniques, of this rule.

(2) Medium erosion intensity shorelines shall utilize biological or bioengineering stabilization practices in accordance with section 6, Criteria for Stabilization Techniques, of this rule.

(3) High erosion intensity shorelines shall utilize biological, bioengineering or structural stabilization practices in accordance with section 6, Criteria for Stabilization Techniques, of this rule.

4. STREAMBANK EROSION INTENSITY CALCULATION

(a) Applications for streambank stabilization shall be required to complete and report the calculations detailed below to document bank-ful stream velocity and shear stress:

(1) Bankful stream velocity

i. Manning's equation:

$$v = \frac{Q}{A} = \left(\frac{1.49}{n}\right) R^{2/3} S^{1/2}$$

v = Average velocity of flow (feet/sec)
Q = Bankful flow (cubic feet/sec)
A = Area of flow (square feet)
n = Manning's number
R = Hydraulic radius (feet)
S = Slope of channel bottom (rise/run)

(2) Shear stress on the streambank

i. $\tau = d \times \mu \times S$

τ = Shear stress (pounds / square feet)
d = Bankful flow depth (feet)
μ = Unit weight of water (62.4 pounds / cubic feet)
S = Slope of channel bottom (rise/run)

(b) The proposed streambank stabilization practice shall be consistent with the shear stress calculated (low, medium, high).

(1) Low erosion intensity streambanks are those where the shear stress calculated is less than or equal to 2.5 lb per square foot and shall utilize biological stabilization practices in accordance with section 6, Criteria for Stabilization Techniques, of this rule.

(2) Medium erosion intensity streambanks are those where the shear stress calculated is between 2.5 and 5 lb per square foot and shall utilize biological or bioengineering stabilization practices in accordance with section 6, Criteria for Stabilization Techniques, of this rule.

(3) High erosion intensity streambanks are those where the shear stress calculated is greater than 5 lb per square foot and shall utilize biological, bioengineering or structural stabilization practices in accordance with section 6, Criteria for Stabilization Techniques, of this rule.

5. DESIGN FLEXIBILITY. Where an applicant believes that, as a result of site specific conditions, the shoreline erosion intensity as calculated in section 3, Shoreline Erosion Intensity Calculation, or the streambank erosion intensity as calculated in section 4, Streambank Erosion Intensity Calculation, may inaccurately predict the degree of erosion, the District may approve alternative stabilization techniques if the applicant provides sufficient evidence to demonstrate that the proposed stabilization practice represents the minimal impact solution with respect to all other reasonable alternatives.

6. CRITERIA FOR STABILIZATION TECHNIQUES.

(a) General criteria:

(1) The District will permit the installation of structural stabilization practices only where there is a demonstrated need to prevent erosion or to restore eroded shoreline/streambank;

(2) Removal of native vegetation within the shoreline/streambank stabilization zone shall be limited in accordance with the following provisions:

i. Clear cutting shall be prohibited except within the access corridor;

ii. Native vegetation shall be preserved outside of the access corridor as much as practicable and, where removed, shall be replaced with other vegetation that is equally effective in retarding runoff and preventing erosion.

(3) Stabilization practices shall be installed at a 3:1 slope or flatter where practical and feasible. Practices proposed at slopes steeper than 2:1 shall be evaluated as retaining walls in accordance with section 10, Criteria for Retaining Walls, of this rule;

(4) Horizontal encroachment from a shoreline shall be the minimum amount needed and shall not interfere unduly with water flow. Under normal conditions, hard armoring inert material, such as riprap, or other fill shall be placed no more than 5 feet waterward of a shoreline, measured from the OHW. The maximum encroachment waterward of the OHW is 10 feet. Encroachment from streambanks shall be minimized to the greatest extent practical to limit hydraulic impacts;

(5) Streambank stabilization shall not reduce the cross sectional area of the channel nor result in a net increase in the flood stage upstream or at the site of the streambank stabilization practice unless it can be demonstrated to not exacerbate existing high-water conditions;

(6) Shoreline/streambank stabilization practices shall conform to the natural alignment of the bank (e.g., maintain an undulating or meandering shoreline/streambank);

(7) The design shall reflect the engineering properties of the underlying soils and any soil corrections or reinforcements. For a shoreline, the design shall conform to engineering principles for dispersion of wave energy and resistance to deformation from ice pressures and movement. For a streambank, design shall conform to engineering principles for the hydraulic behavior of open channel flow;

(8) For sites involving aquatic plantings or aquatic plant removal, a separate Aquatic Plant Management permit shall be obtained from the Department of Natural Resources, when applicable;

(9) Any work below the ordinary high water level shall be encircled by a flotation sediment curtain. The curtain shall be constructed and maintained as illustrated in "Protecting Water Quality in Urban areas – Best Management Practices for Minnesota" (MPCA 2000). The barrier shall be removed upon completion of the work after disturbed sediment has settled;

(10) All shoreline/streambank stabilization applications shall submit the required exhibits as set forth in section 7, Required Exhibits for Shoreline/Streambank Stabilization, of this rule.

(b) Criteria for biological and bioengineering techniques:

(1) Live plantings incorporated into the shoreline or bank shall be native aquatic and/or native upland vegetation known to occur in the North Central Hardwood Forest eco-region of Minnesota (refer to the Minnesota Department of Natural Resources "Lakescaping for Wildlife and Water Quality" and the Minnesota Pollution Control Agency "Plants for Stormwater Design");

(2) Vegetative treatments shall be installed in accordance with the Natural Resource Conservation Service "Engineering Field Handbook Chapter 16";

(3) If wave barriers are utilized, they shall be located within the 3 foot water depth or less and may not create an obstruction to navigation. Wave barriers shall be removed within 2 years of the installation.

(4) Bioengineered stabilization also must comply with the criteria in (c)(1) – (3) and (5).

(c) Criteria for structural stabilization:

(1) Hard armoring inert material, such as riprap, shall be considered wetland fill only if proposed to be placed within an area identified as a wetland;

(2) Riprap shall extend no higher than the top of the bank, or two feet above the 100-year high water elevation, whichever is lower;

(3) Riprap materials shall be durable stone meeting the size and gradation requirements of MnDOT Class III or IV riprap. Toe boulders shall be at least 50 percent buried and may be as large as 30 inches in diameter;

(4) A transitional granular filter meeting requirements of MnDOT 3601.B, at least 6 inches in depth, shall be placed between the native shoreline and the riprap to prevent erosion of fine grained soils. A geotextile filter fabric meeting the requirements of MnDOT 3733 shall be placed beneath the granular filler where appropriate;

(5) Structural stabilization practices, including riprap, are recommended to include plantings between individual boulders or native upland plantings to retard runoff and prevent erosion wherever feasible and practical.

7. REQUIRED EXHIBITS FOR SHORELINE/STREAMBANK STABILIZATION.

(a) Erosion intensity calculations from section 3, Shoreline Erosion Intensity Calculation, or 4, Streambank Erosion Intensity Calculation, of this rule, whichever is applicable, or materials necessary to make the demonstration required in section 5, Design Flexibility.

(b) Photographs of the project site, showing existing conditions.

(c) Site plan showing:

(1) Survey locating the existing ordinary high water (OHW) elevation, existing shoreline or streambank, 100-year high water elevation, and location of property lines;

(2) Elevation contours of the upland within 15 feet of the OHW and referenced to accepted datum;

(3) Location of the shoreline/streambank stabilization zone and access corridor;

(4) Location of existing trees and shrubs within the shoreline/streambank stabilization zone and an indication of whether they are to be removed or retained;

(5) Plan view of locations and lineal footage of the proposed shoreline/bank stabilization treatment; and

(6) The location of an upland baseline parallel to the shoreline/bank with stationing. The baseline shall be staked in the field and maintained in place until project completion. Baseline origin and terminus each shall be referenced to three fixed features, with measurements shown and described on the plan. Perpendicular offsets from the baseline to the OHW shall be measured and distances shown on the plan at 20 foot stations.

(d) Cross section, drawn to scale, with the horizontal and vertical scales noted on the drawing, detailing:

(1) The existing bank, OHW, and 100-year high water elevation;

(2) The proposed stabilization technique, finished slope, and distance lakeward of the OHW;

(3) Material specifications;

(4) Description of the underlying soil materials.

(e) Specification of erosion control and site stabilization practices.

(f) For biological and bioengineering stabilization practices, a Vegetation Establishment Plan, including:

(1) A plant list with common and scientific names, seed mix specifications, quantities and origin of all material; and

(2) Specification of the methods, schedule and party responsible for ensuring establishment and maintenance of the vegetation for the three years following installation or construction. The plan shall include the control of invasive species and replacement of vegetation as necessary.

(g) For bioengineering:

(1) Detail the location of all hard armoring inert material, such as riprap, to be utilized;

(2) Provide a written narrative explaining how the use of hard armoring inert material such as riprap has been minimized to the extent practical and feasible.

(h) For streambank stabilization:

(1) Cross sectional view of stream channel in existing and proposed conditions;

(2) Longitudinal view of stream channel in existing and proposed conditions;

(3) Plan view of stream channel in existing and proposed conditions;

(4) Identification of bankful indicators;

(5) Documentation of existing soils, wetlands, vegetation, slopes, bank and channel material;

(6) Identification of in-stream features such as woody debris, riffles and pools, etc.

(i) For sites involving aquatic plantings or aquatic plant removal, a copy of the Department of Natural Resources Aquatic Plant Management permit application, if required.

8. CRITERIA FOR LAYING SAND BLANKETS. All permitted sand blanketing shall comply with the following standards:

(a) The sand or gravel used must be clean prior to being spread. The sand must contain no toxins or heavy metal, as defined by the Minnesota Department of Natural Resources, and must contain no weed infestations such as, but not limited to, water hyacinth, alligator weed, and Eurasian watermilfoil, or animal life infestations such as, but not limited to, zebra mussels or their larva. Violators will be prosecuted to the full extent of the law.

(b) The sand layer must not exceed six inches in thickness, 50 feet in width along the shoreline, or one-half the width of the lot, whichever is less, and may not extend more than 10 feet waterward of the ordinary high water mark.

(c) Only one installation of sand or gravel to the same location may be made during a four-year period. After the four years have passed since the last blanketing, the location may receive another sand blanket. No more than two applications may be made at an individual project site.

(d) Exception. Beaches which are operated by governmental entities and available to the public shall be maintained in a manner that represents the minimal impact to the environment, relative to other reasonable alternatives, and but otherwise are exempt from the criteria in paragraphs (b) and (c) of this section.

9. SAND BLANKET REQUIRED EXHIBITS. The following exhibits shall accompany the sand blanket permit application:

(a) Site plan showing property lines, delineation of the work area, existing elevation contours of the adjacent upland area, ordinary high water elevation, and 100-year high water elevation (if available). All elevations must be reduced to NGVD (1929 datum).

(b) Profile, cross sections and/or topographic contours showing existing and proposed elevations in the work area. (Topographic contours should be at intervals not greater than 1.0 foot).

(c) A completed Sand blanket Permit Application form, available from the District.

10. CRITERIA FOR RETAINING WALLS.

(a) A new retaining wall, or repair/reconstruction of an existing retaining wall that increases floodplain encroachment beyond that required by technically sound and accepted repair/reconstruction methods, is permitted only pursuant to a variance or an exception under the District Variance Rule. The applicant must demonstrate that there is no adequate stabilization alternative.

(b) Wooden seawalls and/or steel sheetpiling retaining walls shall comply with accepted engineering principles.

(c) The applicant shall submit a structural analysis prepared by a professional engineer registered in the State of Minnesota, in the practice of civil engineering, showing that the wall will withstand expected ice and wave action and earth pressures.

(d) The applicant shall submit a survey prepared by a registered land surveyor locating the finished wall and shall file a certificate of survey with the District.

11. CRITERIA FOR OTHER SHORELINE IMPROVEMENTS. Other shoreline improvements, such as boat ramps, shall comply with accepted engineering principles as follows:

(a) Boat ramps and other similar improvements shall not be allowed in riparian shoreline areas unless the applicant demonstrates that no feasible alternative riparian access is available, that aquatic habitat and water quality impacts are minimized;

(b) Installation of boat ramps shall involve placement of no more than 50 cubic yards of inert and clean material, and the maximum width of shoreline disturbance shall be 15 feet unless the facility is a commercial marina or public launch facility that requires a greater width; and

(c) Materials utilized for construction of boat ramps or other similar improvements shall be safe and cause no adverse environmental impacts; the improvement shall be of sound design and construction so that the improvement is reasonably expected to be safe and effective.

MINNEHAHA CREEK WATERSHED DISTRICT
BOARD OF MANAGERS

REVISIONS
PURSUANT TO MINNESOTA STATUTES § 103D.341

Adopted April 24, 2014
Effective June 6, 2014

DREDGING RULE

1. POLICY. It is the policy of the Board of Managers to:

(a) Preserve the natural appearance of shoreline areas; recreational, wildlife and fisheries resources of surface waters; surface water quality and the ecological integrity of the riparian environment;

(b) Protect backwater areas and wetlands adjacent to or hydrologically connected to area lakes, with particular protection of backwater areas and wetlands that have been identified by the District as particularly sensitive to stormwater impacts or as providing valuable vegetative diversity or integrity; wildlife or fish habitat; shoreline protection; or exceptional aesthetic, educational, recreational or cultural features;

(c) Minimize impacts from dredging to the biologically productive and ecologically sensitive littoral zone of water bodies to prevent the deterioration of water quality, the proliferation of invasive species and increased seepage;

(d) Balance the riparian rights of property owners with the public interest in protecting water resources.

2. REGULATIONS. No person shall dredge in the beds, banks or shores of any public water or public waters wetland in the District without first securing a permit from the District, and posting a bond or letter of credit pursuant to the Financial Assurance Rule.

3. GENERAL STANDARDS. All permitted dredging shall comply with the following standards:

(a) A spoil disposal site must be identified and found not to be below the OHW of a public water or public water wetland, wetland subject to the Wetland Conservation Act of 1991, or floodplain and not prone to erosion.

(b) Where there is an identifiable source of sediment under the control of the applicant, the plan shall include remedial action to minimize deposition of sediment into a waterbody or off-site.

(c) Before District review, all dredging proposals that involve navigational access to docking structures shall be submitted to and approved by, in the case of public waters, the Minnesota Department of Natural Resources and, in the case of Lake Minnetonka, the Lake Minnetonka Conservation District. Proposed dredging in Lake Minnetonka is subject to the dredging standards of the DNR, MCWD and LMCD Dredging Joint Policy Statement (April 1993).

(d) The proposed project shall represent the "minimal impact" solution to a specific need with respect to all other reasonable alternatives such as dock extensions, aquatic nuisance plant

removal without dredging, beach sand blankets, excavation above the bed of public water, less extensive dredging in another area of the public water, or management of an alternative water body for the intended purpose. For a project determined by the District to present potential impacts to Preserve wetlands and other ecologically sensitive areas, the applicant must demonstrate that the proposed project is likely to cause minimal ecological impact and that it presents the least ecological impact of all reasonable alternatives.

(e) The dredging shall be limited to the minimum dimensions necessary for achieving the stated purpose.

(f) If the dredging will be accomplished by means of hydraulic dredging the following additional standards will apply:

(1) The spoil disposal site shall have a minimum storage capacity equal to four times the calculated volume of solid material to be removed, and a minimum free board between the top of the projected water surface elevation and the top of the dike of one foot, if no outlet from the spoil disposal site is proposed.

(2) The construction of the spoil containment site shall be with earthen dikes. No such dike shall exceed 5.5 feet in height at any point. Dikes shall have a minimum 4 foot wide top and side slopes of 2:1 (H:V) or flatter. The dikes shall be adequately compacted by traversing with appropriate equipment during construction.

(3) Proposed embankments which differ from the standard in 3(f)(2) shall comply with generally accepted engineering principles and be designed and certified by a professional engineer registered in the State of Minnesota.

(4) Spoil containment sites of limited storage volume which propose a discharge back into a receiving water body through a control structure shall meet applicable State water quality guidelines for the receiving water body. Weekly monitoring of the instantaneous discharge shall be performed and paid for by the applicant. The results shall be promptly forwarded to the District Engineer for comparison to state water quality standards for turbidity and total suspended solids.

(5) A restoration plan prepared by a qualified individual shall show proposed methods of retaining waterborne sediments on site during the period of operation. The plan shall show final grades and how the site will be restored, covered and/or vegetated after construction. Sites with high erosion potential characterized by steep slopes or erodible soils may require a cash deposit or surety to ensure performance and any necessary remedial actions.

4. CRITERIA.

(a) Dredging shall be permitted only:

(1) To maintain, or remove sediment from, an existing public or private channel, not exceeding the original or originally permitted extent of dredging, whichever is less, and subject to such further limitations on method or extent of dredging as this rule may provide;

(2) To implement or maintain an existing legal right of navigational access;

(3) To remove sediment to eliminate a source of nutrients, pollutants, or contaminants;

(4) To improve the public recreational, wildlife, or fisheries resources of surface waters; or

(5) For actions by public entities for public purposes.

(b) In evaluating an application to dredge to maintain or remove sediment from an existing public or private channel, the significance of historic dredging will depend on how recently the original dredging or subsequent maintenance to sustain use took place, the extent of recent use, and the amount and significance of evidence supporting use for the proposed purpose.

(c) In evaluating an application to dredge to create or maintain navigational access, the District will determine whether the navigation sought is reasonable under the circumstances, considering:

(1) The ecological sensitivity or preserve status of any potentially affected water body or wetland;

(2) The size, draft, speed, motorized status and other characteristics of watercraft historically used or proposed to be used in the area proposed to be dredged;

(3) The size, draft, speed, motorized status and other characteristics of watercraft typically moored and used within 200 yards of the area proposed to be dredged;

(4) The size and restrictiveness of existing channels and bridge openings that may affect navigation; and

(5) The availability of alternative means of gaining access, such as extending docks; purchasing, renting or leasing shore moorings; or anchoring watercraft away from shore moorings.

(d) No dredging shall be permitted:

(1) Above the ordinary high water level or into the upland adjacent to the lake or watercourse;

(2) That would enlarge a natural watercourse landward or that would create a channel to connect adjacent backwater areas for navigational purposes;

(3) Where the dredging will alter the natural shoreline of a lake;

(4) Where the dredging might cause increased seepage or result in subsurface drainage;

(5) Where any portion of the dredged area contains any slope steeper than 3:1 (H:V) in a marina or channel, or steeper than 10:1 (H:V) for an area adjoining residential lakeshore; or

(6) Where adverse ecological impact to a preserve wetland or other ecologically sensitive area cannot be minimized.

(7) No dredging in a public water shall occur between April 1st and June 30th. No dredging in any other waterbody shall occur between April 1st and June 30th unless the applicant demonstrates that fish spawning does not occur in the waterbody.

(e) Dredging presenting the conditions identified in 4(d)(1-3) above may be permitted where the project complies with applicable DNR rules.

5. REQUIRED EXHIBITS. The following exhibits shall accompany the permit application. One set - full size; one set - reduced to maximum size of 11"x17".

(a) Site plan showing property lines, delineation of the work area, existing elevation contours of the adjacent upland area, ordinary high water elevation, and 100-year high water elevation (if available). All elevations must be reduced to NGVD (1929 datum).

(b) Profile, cross sections and/or topographic contours showing existing and proposed elevations and proposed side slopes in the work area. (Topographic contours should be at intervals not greater than 1.0 foot.)

(c) In the case of projects using hydraulic means of sediment removal and on-site spoil containment the applicant shall supply:

(1) Cross section of the proposed dike.

(2) Stage/storage volume relationship for the proposed spoil containment area.

(3) Detail of any proposed outlet structure, showing size, description and invert elevation.

(4) Stage/discharge relationship for any proposed outlet structure from the spoil containment area.

(5) Site plan showing the locations of any proposed outlet structure and emergency overflow from the spoil containment area.

(d) Site plan showing the proposed location of floating silt curtains.

(e) Support data:

(1) Description and volume computation of material to be removed.

(2) Description of equipment to be used.

(3) Construction schedule.

(4) Location map of spoil containment area.

(5) Erosion control plan for containment area.
(6) Restoration plan for any proposed permanent on-site spoil containment site showing final grades, removal of control structure, and a description of how and when the site will be restored, covered or revegetated after construction.

(7) Detail of any proposed floating silt curtain including specifications for the silt curtain.

(f) In the case of projects where dredging:

(1) Might cause increased seepage or result in subsurface drainage, or

(2) Will remove sediment to eliminate a source of nutrients, pollutants, or contaminants, a minimum of two soil bearing logs extending at least two feet below the proposed work elevation shall be required.

6. FAST-TRACK PERMIT. A Fast Track permit may be issued by District staff for the removal of accumulated sediment caused by a stormwater outlet. The application otherwise must comply with all provisions of this rule. In addition to the requirements of sections 3, General Standards and 5, Required Exhibits of this rule, the following criteria shall be met:

(a) Authorization shall apply only to removal of sediment identified as non-native material accumulated due to stormwater runoff or erosion.

(b) Dredging shall not materially change the elevation or contour of the bed of the affected basin.

MINNEHAHA CREEK WATERSHED DISTRICT
BOARD OF MANAGERS

REVISIONS
PURSUANT TO MINNESOTA STATUTES § 103D.341

Adopted April 24, 2014
Effective June 6, 2014

WETLAND PROTECTION RULE

1. POLICY. It is the policy of the Board of Managers to:

(a) Achieve no net loss in the quantity, quality and biological diversity of Minnesota's existing wetlands;

(b) Increase the quantity, quality and biological diversity of Minnesota's wetlands by restoring or enhancing diminished or drained wetlands;

(c) Avoid direct or indirect impacts from activities that destroy or diminish the quantity, quality and biological diversity of wetlands;

(d) Minimize direct or indirect impacts from activities that destroy or diminish the quantity, quality and biological diversity of wetlands;

(e) Rectify the impact of any such activity by repairing, rehabilitating, or restoring the affected wetland environment;

(f) Reduce or eliminate the impact of such activity over time by preservation and maintenance operation during the life of the activity;

(g) Compensate for the impact on the wetlands by restoring a wetland;

(h) Compensate for the impact on the wetlands by replacing or providing substitute wetland resources or environments; and

(i) Promote competent administration of the Wetland Conservation Act (WCA) within the watershed.

2. REGULATION UNDER WCA AND WATERSHED LAW.

The District regulates activity impacting wetlands pursuant to the WCA and the Watershed Law. A permit for activities impacting wetlands or requiring wetland buffers is required as follows:

(a) In municipalities where the District is the local government unit under the WCA, a permit is required from the District for any draining or filling of wetlands, or excavation in the permanently and semipermanently flooded areas of type 3, 4, or 5 wetlands, and in all wetland types if the excavation results in filling, draining, or conversion to nonwetland. The WCA, as amended, and its implementing rules as set forth in Minnesota Rules chapter 8420, as amended, specifically including sequencing requirements and all exemptions, are incorporated as a part of this rule. Work affecting a wetland that qualifies as no-loss under the WCA and work affecting an

incidental wetland, as defined in the WCA, do not require a permit under this rule. Wetland replacement, where permitted, shall comply with section 3, Wetland Replacement, of this rule.

(b) A permit is required from the District pursuant to the excavation and buffer provisions in sections 4, Excavation, and 5, Buffer, of this rule, which are adopted under the District's watershed law authority and apply whether or not the District is the WCA local government unit. Pursuant to this authority and section 4, Excavation, the District requires a permit for excavation in any type of wetland, except where specifically exempted by the WCA or when the work meets no-loss criteria under the WCA. No permit under this rule is required for excavation in an incidental wetland, as defined in the WCA.

3. WETLAND REPLACEMENT.

(a) Project-specific replacement wetland must be sited in the following order of priority, which replaces the siting priority in Minnesota Rules section 8420.0522, subpart 7, as it may be amended:

(1) On site;

(2) Within the same subwatershed as the affected wetland (see Appendix 1);

(3) In the Minnehaha Creek watershed;

(4) In the same eight-digit Hydrologic Unit Code watershed.

(b) Pursuant to Minnesota Rules section 8420.0522, subp.7, as it may be amended, when reasonable, practical and environmentally beneficial replacement opportunities are not available in a siting priority area in subsection 3(a), providing replacement priority areas, the applicant may seek opportunities at the next level. When neither replacement opportunities nor privately banked credits are available in any priority area, the applicant may comply with this section through the purchase of banked credits from the District at the cost to the District to establish credits, so long as the District has determined that sufficient credits are available.

4. EXCAVATION. Excavation in wetlands is subject to the following requirements.

(a) Excavation is governed by the substantive and procedural standards, criteria and requirements set forth in the WCA, as amended, and the rules implementing the WCA as set forth in Minnesota Rules chapter 8420, as amended, including all exemptions, with the exception that replacement for excavation not subject to the WCA shall be at the ratio of 2:1. Excavation in incidental wetland is not subject to the requirements of this section. The priority siting requirements of section 3 of this rule, Wetland Replacement, apply to replacement of excavated wetland under this section.

(b) Excavation of a wetland performed for public benefit, including excavation to remove or control invasive species, shall be deemed self-replacing if the applicant demonstrates that the wetland to be excavated is degraded; the proposed activity would increase the wetland's function and value, as determined using the current version of the Minnesota Routine Assessment Method or other method approved by the District; and the enhanced wetland function and value are likely to be preserved. Excavation must not result in a change of wetland type, unless the applicant demonstrates that public benefit is not obtainable absent such impact.

5. BUFFER.

(a) Any activity for which a permit is required under this Wetland Protection Rule, the Stormwater Management Rule or the District Waterbody Crossings and Structures Rule, and New Principal Residential Structure construction that increases the imperviousness of the subject parcel must provide for buffer adjacent to each wetland and public waters wetland. To the extent the buffer requirement applies to a proposed New Principal Residential Structure, it will be applied in accordance with protections afforded a zoning nonconformity under state law so as not to unduly restrict the proposed action. Buffer must be provided on that part of the wetland edge that is downgradient from the activity or construction and around each wetland that will be disturbed.

(b) Buffer width will be determined in accordance with section 6, Buffer Width, of this rule.

(c) Buffers shall be documented by declaration or other recordable instrument approved by the District and recorded in the office of the county recorder or registrar before activity under the MCWD permit commences. A buffer on public land or right-of-way may be documented in a written agreement executed with the District in place of a recorded instrument. The agreement shall state that if the land containing the buffer is conveyed, the public body shall require the buyer to comply with this subsection.

(d) A permanent wetland buffer monument shall be installed at each lot line where it crosses a wetland buffer, and where needed to indicate the contour of the buffer, with a maximum spacing of 100 feet. Language shall indicate the purpose of the buffer, restrictions, and the name and phone number of the Minnehaha Creek Watershed District. On public land, or right-of-way, the monumentation requirement may be satisfied by the use of a marker flush to the ground or breakaway markers of durable material. At the request of the applicant, the District shall provide wetland buffer monuments at production cost.

6. BUFFER WIDTH.

(a) The Base Buffer Width shall be determined by the management class of the wetland as evaluated by the District's Functional Assessment of Wetlands or by the current version of the Minnesota Routine Assessment Method (MnRAM). Stormwater sensitivity parameters must be analyzed and results included in the evaluation, unless all stormwater flow to wetlands is managed in compliance with the bounce, inundation and runout-elevation control criteria in subsection 8(b) of the District's Stormwater Management Rule.

Management Class	**Base Buffer Width**	**Minimum Applied Buffer Width**
Manage 3	20 feet	16 feet
Manage 2	30 feet	24 feet
Manage 1	40 feet	34 feet
Preserve	75 feet	67 feet

(b) The Applied Buffer Width, the actual width of wetland buffer(s) required for a permitted project, shall be the Base Buffer Width as reduced by beneficial slope or soil conditions pursuant to the following formulas:

(1) For every 5 percent decrease in average buffer slope from 20 percent, the Base Buffer Width may be reduced 2 feet.

(2) For every grade of Hydrologic Soil Group above Type D for the predominant buffer soil condition, the Base Buffer Width may be reduced 2 feet.

Reductions for beneficial slope or soil conditions shall not reduce the buffer width to less than the applicable Minimum Applied Buffer Width.

(c) Buffer width may vary based on demonstrated site constraints, provided that a width of at least 50 percent of the Applied Buffer Width is maintained at all points, there is no reduction in total buffer area, and the buffer provides wetland and habitat protection at least equivalent to a buffer of uniform Applied Buffer Width. Buffer width averaging calculation will exclude any part of the buffer exceeding 200 percent of the Applied Buffer Width. The area of any path or trail allowed in the buffer will be added to the total area required by the Applied Buffer Width, except that construction of a trail or path of no more than 4 feet in width to provide riparian access through the buffer will not increase the required buffer area.

(d) The Applied Buffer Width may be further reduced by the District upon a demonstration by the applicant that the proposed buffer conditions clearly provide function and value equal to or greater than would be provided by a buffer of the applicable Applied Buffer Width, but may not be reduced to less than 50 percent of the applicable Applied Buffer Width.

(e) The Applied Buffer Width for Linear Reconstruction Projects shall be limited to the extent of available right-of-way. A buffer is not required for resurfacing of an existing road, sidewalk or trail that does not increase the area of impervious surface.

(f) The Applied Buffer Width for New Principal Residential Structures shall be limited to 25 percent of the distance between the existing structure at the point that it is nearest to the wetland and the wetland, or 25 feet, whichever is greater, provided that such a buffer shall not exceed the Base Buffer Width, and the buffer shall not render a property unbuildable.

7. WETLAND BUFFER VEGETATION.

(a) Buffer vegetation shall not be cultivated, cropped, pastured, mowed, fertilized, subject to the placement of mulch or yard waste, or otherwise disturbed, except for periodic cutting or burning that promotes the health of the buffer, actions to address disease or invasive species, mowing for purposes of public safety, temporary disturbance for placement or repair of buried utilities, or other actions to maintain or improve buffer quality, each as approved by District staff or when implemented pursuant to a written maintenance plan approved by the District. Pesticides and herbicides may be used in accordance with Minnesota Department of Agriculture rules and guidelines. No new structure or hard surface shall be placed within a buffer, except as provided in paragraph 6(c). No fill, debris or other material shall be excavated from or placed within a buffer.

(b) For public land, right-of-way or property held by a homeowner's association, the applicant may comply with paragraphs 5(d), requiring buffer monumentation, 7(a), vegetation management, and section 10, Wetland Buffer Monitoring, of this rule by demonstrating that the buffer will be maintained in accordance with a written maintenance agreement with the District meeting the buffer monumentation, vegetation management and wetland buffer monitoring requirements in this rule, listing required elements of paragraph 9(h), the Wetland Buffer

Maintenance Plan, including terms describing in detail the location of wetland buffer on the subject property and providing detailed protocols for buffer maintenance.

(c) Buffer areas, or portions thereof, that are not vegetated or will be disturbed by grading or other site activities during construction shall be replanted and maintained according to the following standards:

(1) Soils must be decompacted to a depth of 18 inches and organic matter must be incorporated into soils before revegetation. Decompaction shall be accomplished solely by incorporation of organic matter within the drip line or critical root zone of trees or within 10 feet of underground utilities.

(2) Erosion/sediment control practices, including provisions of sections 5, Erosion Control Plan, and 9, Maintenance, of the District Erosion Control Rule, as appropriate, shall be used during buffer vegetation establishment.

(3) Buffers shall be planted with a native seed mix and/or native plantings approved by the District.

(4) Buffer maintenance and monitoring shall be performed in accordance with section 10, Wetland Buffer Monitoring, of this rule.

8. FINANCIAL ASSURANCE. A performance bond, letter of credit or other financial assurance, consistent with the District Financial Assurance Rule, may be required for any project involving wetland replacement or replanting of wetland buffers. The financial assurance shall be maintained until the monitoring period has ended and District has approved the wetland replacement or establishment of the buffer.

9. REQUIRED EXHIBITS. The following exhibits shall accompany the Combined Joint Notification (CJN) form:

(a) Complete delineation report, in accordance with the guidelines provided by the Board of Water and Soil Resources, for any wetland(s) that will be impacted or require a buffer. The report must be approved by the WCA Local Government Unit (LGU). The report must include a copy of the Notice of Decision for all projects occurring in cities where the District is not the LGU.

(b) Site plan, one set - full size and one set - reduced to a maximum size of 11” x 17”, showing:

(1) Property lines and corners and delineation of lands under ownership of the applicant;

(2) Existing and proposed elevation contours; including the existing runout elevation and flow capacity of the wetland outlet;

(3) Boundaries of all wetlands on the property;

(4) Boundaries of all existing or proposed buffers, along with proposed grading and other disturbance in existing or proposed buffers;

(5) Proposed locations of buffer signage; and

(6) Area of the wetland portion to be filled, drained, or excavated.

(c) Identification and area of the total watershed area presently contributing stormwater runoff to the wetland.

(d) A replacement plan, if required, meeting all the requirements of Minnesota Rules chapter 8420, as amended. Replacement plans for wetland impacts not subject to the WCA must meet these same requirements.

(e) For projects involving wetland excavation (including projects deemed self-replacing under paragraph 4(b)), the application shall identify spoils placement on upland and specify how the deposited materials will be stabilized and vegetated.

(f) Information showing whether the subject wetland is protected by either the State or municipality or both.

(g) Wetland Buffer Planting Plan, if required under section 7, Wetland Buffer Vegetation, including:

(1) Proposed seed mixes and other plant materials to be used;

(2) Seed or plant supplier and origin of materials;

(3) Seed/planting bed preparation (i.e. disking, raking, clearing, herbicide control, topsoiling, etc.);

(4) Seeding and/or planting method (i.e. broadcast, drill, etc.);

(5) Application rate in either pounds of seed per acre and/or the number of plants per unit area if using plugs or seedlings. Specify if using pure live seed (PLS). Higher application rates will be required if not using PLS;

(6) Detailed erosion control plan for establishing wetland buffer.

(h) Wetland Buffer Maintenance Plan, if required under section 7, Wetland Buffer Vegetation, including:

(1) Schedule of establishment and maintenance activities for the first five years of establishment (i.e. watering, burning, mowing, herbicide control, etc.);

(2) Identification of probable invasive species and steps that will be taken to control the spread of invasive species;

(3) Inspection methods and schedule for monitoring invasive species and documenting native species germination and establishment.

10. WETLAND BUFFER MONITORING. For buffer areas required to be established or replaced under subsection 7(c), setting standards for buffer establishment and maintenance:

(a) Upon final establishment, wetland buffers shall contain little or no bare soil and shall exhibit a dominance of native vegetation.

(b) The applicant shall submit to the District an annual Wetland Buffer Inspection Report on or before January 1 of each year for five years. Alternatively, applicants may request that the District perform the Wetland Buffer Inspection and produce the report for a fee equal to the District's actual costs to perform the work.

(1) The applicant may submit a written request to cease annual monitoring by year three if the wetland buffer is well established pending District approval.

(2) If the wetland buffer is poorly established at the end of the five year monitoring period, the District may require continued monitoring and maintenance.

(c) The annual Wetland Buffer Inspection Report shall include:

(1) Site plan showing:

i. Location of permitted buffer area;

ii. Areas of bare soil or erosion;

iii. Areas of invasive vegetation; and

iv. Location and type of any encroachments on the buffer (structures, unapproved mowing, trails, etc.)

(2) Color photos of the wetland buffer taken during the growing season. Vantage points for these photos shall be labeled on the site plan.

(3) Description of buffer vegetation including:

i. List of dominant plant species and their estimated percent cover.

ii. Comparison of the species present to the approved planting/seeding plan.

(4) A written narrative that identifies the management strategies that will be utilized during the upcoming growing season to manage invasive species, improve percent vegetative cover and species diversity, and mitigate any encroachments on the buffer.

Appendix 1:

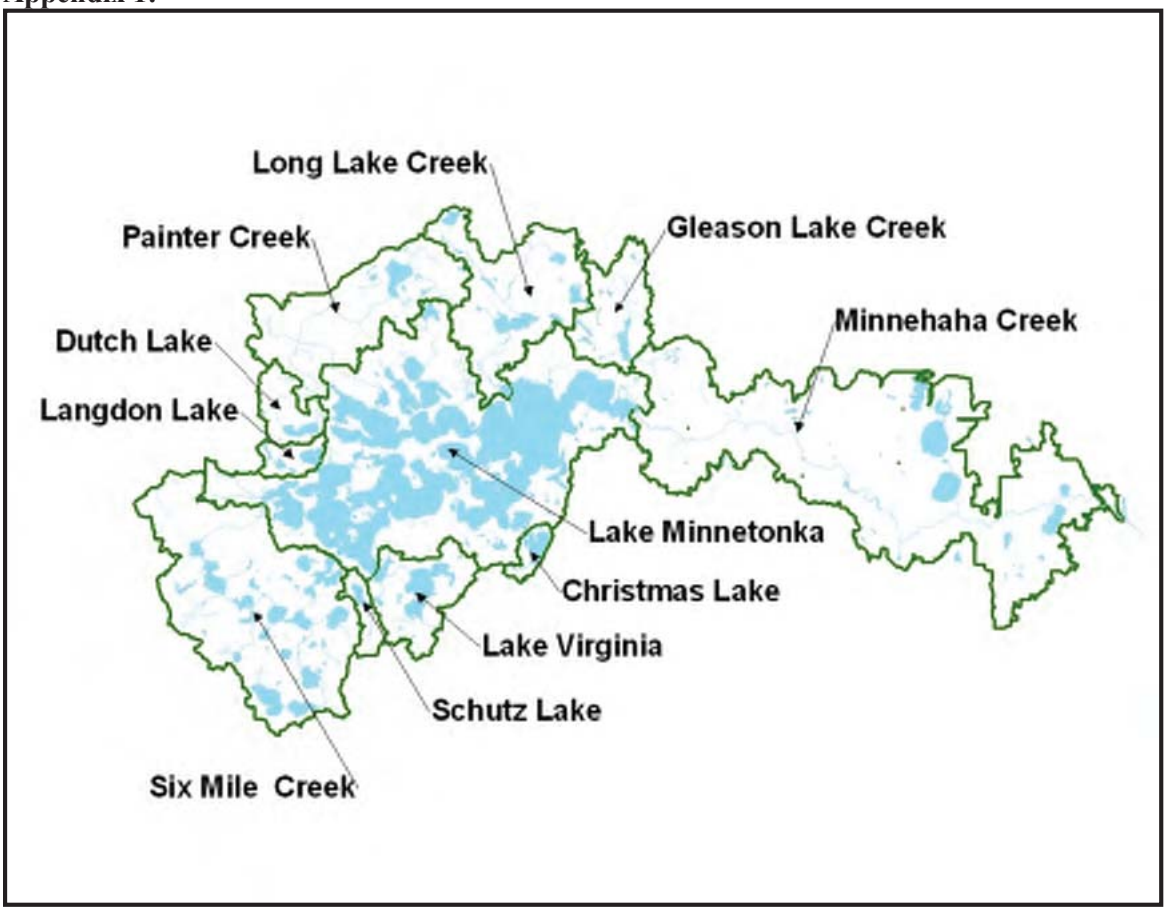
Long Lake Creek
Painter Creek
Gleason Lake Creek
Minnehaha Creek
Dutch Lake
Langdon Lake
Lake Minnetonka
Christmas Lake
Lake Virginia
Schutz Lake
Six Mile Creek

MINNEHAHA CREEK WATERSHED DISTRICT
BOARD OF MANAGERS

REVISIONS
PURSUANT TO MINNESOTA STATUTES § 103D.341

Adopted April 24, 2014
Effective June 6, 2014

FLOODPLAIN ALTERATION RULE

1. POLICY. It is the policy of the Board of Managers to:

(a) Preserve existing water storage capacity below the 100-year high water elevation of all waterbodies in the watershed to minimize the frequency and severity of high water;

(b) Minimize development below the 100-year high water elevation that will unduly restrict flood flows or aggravate known high water problems.

2. REGULATION. No person shall alter or fill land below the projected 100-year high water elevation of a waterbody without a permit from the District. A Fast Track permit may be issued for 6 inches or less of organic material to be incorporated into existing soil in preparation for sodding or seeding.
3. CRITERIA.

(a) Fill shall not cause a net decrease in storage capacity below the projected 100-year high water elevation of a waterbody. The allowable fill area shall be calculated by a professional engineer registered in the State of Minnesota. Creation of floodplain storage capacity to offset fill shall occur before any fill is placed in the floodplain, unless the applicant demonstrates that doing so is impractical and that placement of fill and creation of storage capacity can be achieved concurrently. Any placement of fill prior to creation of floodplain storage capacity will only be allowed upon a demonstration by a registered professional engineer that such work will not aggravate high water conditions.

(b) For fill in a watercourse, in addition to the criteria of paragraph 3(a), the fill shall not cause an increase in the 100-year flood elevation.

(c) The criteria of paragraph 3(a) does not apply to fill in a waterbody other than a watercourse if the applicant shows that the proposed fill, together with the filling of all other properties on the waterbody to the same degree of encroachment as proposed by the applicant, will not cause high water or aggravate flooding on other properties and will not unduly restrict flood flows.

(d) No new impervious surface may be created within the lesser of the 10-year floodplain or 25 feet of the centerline of a watercourse, except impervious area may be created that is:
(1) no larger than 10% of the floodplain area of the parcel(s), or
(2) the surface is an integral component of a linear public roadway or trail.
(e) Ice ridge grading within the floodplain must conform to the original cross-section of the lakebed. Approval for ice ridge grading or removal of ice ridge material from the floodplain requires the applicant to demonstrate that the ice ridge resulted from ice action during the

previous winter. No additional material may be placed within the floodplain except in accordance with this Rule.

(f) All new residential, commercial, industrial and institutional structures shall be constructed such that all door and window openings are at a minimum of two feet above the 100-year high water elevation.

4. REQUIRED EXHIBITS. The following exhibits shall accompany the permit application. One set - full size; one set - reduced to maximum size of 11"x17".

(a) Site plan showing property lines, delineation of the work area, existing elevation contours of the work area, ordinary high water elevation (OHW), and 100-year high water elevation. All elevations must be reduced to NGVD (1929 datum).

(b) Grading plan showing any proposed elevation changes.

(c) Preliminary plat of any proposed land development.

(d) Determination by a professional engineer of the 100-year high water elevation before and after the project and the extent of impervious surface within the 10-year floodplain.

(e) Computation by a professional engineer of cut, fill and change in water storage capacity resulting from proposed grading.

(f) Soil boring results if available.

(g) If not otherwise subject to the District Erosion Control Rule, an erosion control plan conforming to sections 5, Erosion Control Plan, and 9, Maintenance, of the Erosion Control Rule.

(h) Any project resulting in greater than 50 cubic yards of fill is required to provide an as-built survey upon project completion which documents the location and volume of both fill and compensatory storage.

5. EXCEPTION.

If the 100-year high water elevation of a waterbasin is entirely within a municipality, the waterbasin does not outlet during the 100-year event, and the municipality has adopted a floodplain ordinance prescribing an allowable degree of floodplain encroachment, the ordinance governs the allowable degree of encroachment and no permit is required under this rule.

APPENDIX D

City Ordinances and Overlay Districts

Department of Natural Resources' *"Field Guide to the Native Plant Communities of Minnesota, the Eastern Broadleaf Forest Province."*

(c) No more than 25 percent of plants shall be from one species.

(d) Plants shall be selected and placed in a way which most effectively provides a buffer, as approved by the city. Species with known vulnerability to disease or infestation shall not be permitted. The landscaping plan shall consider factors such as survivability of plantings, surrounding topography, and interaction with berms/fences.

Subd. 6. Credit for existing vegetation. The city shall grant credit for existing vegetation that is preserved within an area where a buffer yard is required. Credit shall be based on Subd. 4 above, including the additional points for larger plantings.

Subd. 7. Berms and Fences. When berms or fences are combined with plant materials in a buffer yard, at least half of the plantings shall be located towards the exterior of the subject property, in relation to the location of the fence or berm. If an earth berm is proposed, the berm shall be undulating in order to give a natural appearance.

Subd. 8. Buffer yard location. Buffer yards, when required, shall be located adjacent to the outer perimeter of a development site.

(a) Buffer yards may be located within required yard setbacks, but a principal structure shall be set back a minimum of 10 feet and an accessory structure a minimum of five feet from the buffer yard.

(b) In the case a wetland interferes with the lineal continuation of a buffer yard, alternative means may be required by the city to reduce the impact of the development upon adjacent property.

Subd. 9. Recorded document required. A document, in a form provided by the city, shall be recorded against the property over which a buffer yard lies. This document shall include, at a minimum, the location of the buffer yard, the restrictions on the use of this property, and the maintenance responsibility for the landscaping and improvements.

Subd. 10. Use of buffer yards. Buffer yards shall be left in a predominantly undeveloped state. Passive recreation and pedestrian, bicycle, or equestrian paths may be allowed, so long as the required plantings are provided. No sports courts, swimming pools, storage or other similar use shall be allowed. Paving shall be limited to areas necessary to provide access to the subject property.

Section 828.33. Stormwater Management

Subd. 1. Purpose

Land development projects, and associated increases in impervious cover, alter the hydrologic response of local watersheds. Increases in stormwater runoff rates and volumes, flooding, erosion, sediment transport and deposition, and water-borne

pollutants can be controlled and minimized through the regulation of stormwater runoff.

The purpose of this ordinance is to protect and safeguard the health, safety, and welfare of the public by regulating stormwater runoff in order to protect local water resources from degradation. This ordinance seeks to meet this purpose through the following objectives:

(a) minimize increases in stormwater runoff rates from any development in order to reduce flooding, siltation and erosion and in order to maintain the integrity of stream channels,

(b) minimize increases in nonpoint source pollution caused by stormwater runoff from development which would otherwise degrade local water quality,

(c) minimize the total annual volume of surface water runoff that flows from any specific site during and following development so as not to exceed the predevelopment hydrologic regime to the maximum extent practicable,

(d) ensure that these management controls are properly maintained and pose no threat to public safety, and

(e) implement stormwater management controls to help meet current and future total maximum daily load (TMDL) goals, to address the need to improve water quality, and to meet objectives in the Local Surface Water Management Plan.

Subd. 2. Incorporation by Reference

The ***Medina Stormwater Design Manual***, dated November 15, 2011, as it may be amended from time to time, is hereby incorporated into this ordinance as if fully set forth herein. The Manual shall serve as the official guide for stormwater principles, methods, and practices for proposed development activities.

Subd. 3. Definitions

For the purpose of this ordinance, the following definitions describe the meaning of the terms used in this ordinance:

(a) "Applicant" means a property owner or agent of a property owner who has filed an application for a stormwater management approval.
(b) "Channel" means a natural or artificial watercourse with a definite bed and banks that conducts continuously or periodically flowing water.
(c) "Impervious Area" means those surfaces that cannot effectively infiltrate rainfall (e.g., building rooftops, pavement, sidewalks, gravel, driveways, swimming pools, etc.).
(d) "Land Disturbance Activity" means any activity that changes the volume or peak discharge rate of stormwater runoff from the land surface. This may include the grading, digging, cutting, scraping, or excavating of soil, placement of fill

materials, paving, construction, substantial removal of vegetation, or any activity that bares soil or rock or involves the diversion or piping of any natural or fabricated watercourse.

(e) "Maintenance Agreement" means document recorded against the property which provides for long-term maintenance of stormwater treatment practices.

(f) “Major Expansion Project” means any construction, alteration, or improvement which disturbs one acre or more in area or which increases the Impervious Area by one-half acre or more and where the existing land use is commercial, industrial, institutional, or multi-family residential. For the purposes of this section, the area of disturbance when repaving or reclaiming an existing paved surface shall only include those areas where soil beneath the existing gravel base is disturbed.

(g) “Major Single-family Residential Project” means:

(i) Any subdivision, as defined by law, which result in one or two additional single-family detached lots; or

(ii) Any construction, alteration, or improvement which: 1) disturbs one acre or more in area and increases Impervious Area by more than 1,000 square feet; or 2) increases Impervious Area by more than 5,000 square feet.

(h) “Minor Expansion Project” means any construction, alteration, or improvement which increases the Impervious Area by more than 5,000 square feet and less than one-half acre where the existing land use is commercial, industrial, institutional, or multi-family residential.

(i) “New Development” means:

(i) Any subdivision, as defined by law. For the purposes of this section, a subdivision creating less than three new single-family detached lots shall not be considered New Development, but should instead be considered a Major Single-family Residential Project.

(ii) Construction of a principal structure on an existing vacant lot. For the purposes of this section, construction of a detached single-family home shall not be considered New Development.

(iii) Redevelopment of a property which results in the removal of more than 50 percent of the market value of the principal structure and such removal is followed by reconstruction. For the purposes of this section, redevelopment of a single-family detached home shall not be considered New Development.

(j) "Nonpoint Source Pollution" means pollution from any source other than from any discernible, confined, and discrete conveyances, and shall include, but not be limited to, pollutants from agricultural, silvicultural, mining, construction, subsurface disposal and urban runoff sources.

(k) "Off-Site Facility" means a stormwater management measure located outside the subject property boundary described in the permit application for land development activity.

(l) “Responsible Party” means the entity which will be responsible for ownership and maintenance of Stormwater Treatment Practices.

(m) “Site” means:

(i) For New Development any tract, lot or parcel of land or combination of tracts, lots, or parcels of land, which are in one ownership, or are contiguous

and in diverse ownership, where development is to be performed as part of a unit, subdivision, or project.

(ii) For a Major Expansion Project, Minor Expansion Project or Major Single-family Residential Project the area of new construction, as shown on an approved site plan, or the original parcel. Final determination of the applicable area for stormwater management shall be made by the City.

(n) "Stop Work Order" means an order which requires that all construction activity on a Site be stopped.

(o) "Stormwater Management" means the use of structural or non-structural practices that are designed to reduce stormwater runoff pollutant loads, discharge volumes, and/or peak discharge rates.

(p) “Stormwater Management Plan” means a set of drawings or other documents submitted by a person as a prerequisite to obtaining a stormwater management approval, which contains all of the required information and specifications pertaining to Stormwater Management.

(q) "Stormwater Runoff" means flow on the surface of the ground, resulting from precipitation.

(r) "Stormwater Treatment Practices (STPs)" means measures, either structural or nonstructural, that are determined to be the most effective and practical means of preventing or reducing point source or nonpoint-source pollution inputs to stormwater runoff and waterbodies.

(s) "Water Quality Volume (WQ_v)" means the runoff storage volume needed to treat the specified phosphorus loading as determined in the Medina Stormwater Design Manual.

(t) "Watercourse" means a permanent or intermittent stream or other body of water, either natural or fabricated, which gathers or carries surface water.

(u) “Watershed” means the total drainage area contributing runoff to a single point.

Subd. 4. Applicability

(a) This ordinance shall apply to the following circumstances:

(i) New Development, as defined herein;

(ii) Major Expansion Projects, as defined herein;

(iii) Minor Expansion Projects, as defined herein; and

(iv) Major Single-family Residential Projects, as defined herein.

(b) The following activities shall be exempt from the stormwater performance criteria of this ordinance:

(i) Agricultural activity.

(ii) Repairs to any Stormwater Treatment Practice deemed necessary by the City.

(iii) Emergency actions as declared by the City.

(iv) Land Disturbance Activities which do not meet the thresholds described for New Development, Major or Minor Expansion Projects, or Major Single-family Residential Projects as described herein.

Subd. 5. Performance Criteria for Stormwater Management

Unless determined by the City to be exempt or granted a waiver, all site designs shall establish Stormwater Management Practices to control the peak flow rates and pollutants of stormwater discharge associated with specified design storms and runoff volumes, as detailed in the ***Medina Stormwater Design Manual***.

(a) New Development: Rate Control, Volume Control, and Water Quality standards shall apply to all New Development. The City Council may waive strict adherence with Rate Control, Volume Control, and Water Quality standards for redevelopment and new development which results in less than one acre of Land Disturbance. Best management practices addressing the potential water resource impacts associated with the proposed activity shall be incorporated to limit creation of impervious surface, maintain or enhance on-site infiltration, control peak flow rates, and limit pollutant generation on and discharge from the Site. Best management practices may include site design and structural and non-structural practices.

(b) Major Expansion Projects: Rate Control, Volume Control, and Water Quality standards shall apply to all Major Expansion Projects.

(c) Minor Expansion Projects: Rate Control, Volume Control and Water Quality standards shall apply to all Minor Expansion Projects. As an alternative to meeting relevant Volume Control and Water Quality standards, an Applicant may install a raingarden or similar stormwater improvement as described in the Medina Stormwater Design Manual. Provisions shall also be required to control the rate of run-off if determined to be necessary by the City Engineer.

(d) Major Single-family Residential Projects: Rate Control, Volume Control and Water Quality standards shall apply to all Major Single-family Residential Projects. As an alternative to meeting relevant Volume Control and Water Quality standards, an Applicant may install a raingarden or similar stormwater improvement as described in the Medina Stormwater Design Manual. Provisions shall also be required to control the rate of run-off if determined to be necessary by the City Engineer.

Subd. 6. Approval Required Prior to Permit or Subdivision

No landowner or land operator shall receive a building permit, grading permit, or subdivision approval for any project involving Land Disturbance Activities subject to this ordinance until first meeting the requirements of this ordinance prior to commencing the proposed activity.

Subd. 7. Application Requirements

Unless otherwise exempted by this ordinance, an application for stormwater management approval shall include the following as a condition for its consideration:

(a) a Stormwater Management Plan;
(b) a Maintenance Agreement.

The Stormwater Management Plan shall be prepared to meet the requirements of Subd. 5 of this ordinance; the Maintenance Agreement shall be prepared to meet the

requirements of Subd. 10 of this ordinance.

In lieu of preparation of a Stormwater Management Plan, Major Single-family Residential Projects and Minor Expansion Projects may install a raingarden or similar stormwater improvement as described in the Medina Stormwater Design Manual.

Subd. 8. Application Requirements

Applications shall include the following: five copies of the Stormwater Management Plan, three copies of the Maintenance Agreement, and any required review fees.

Subd. 9. Waivers for Providing Stormwater Management

Every Applicant shall provide for Stormwater Management, unless a waiver is granted. Requests to waive the Stormwater Management requirements shall be submitted to the City for approval.

The minimum requirements for Stormwater Management may be waived in whole or in part upon written request of the Applicant, if the City determines that at least one of the following conditions applies:

(a) It can be demonstrated that the proposed Land Disturbance Activity will not impair attainment of the objectives of this ordinance.
(b) Alternative minimum requirements for on-site management of stormwater discharges have been established in a Stormwater Management Plan that has been approved by the City.
(c) Provisions are made to manage stormwater by an Off-Site Facility. The Off-Site Facility is required to be in place, to be designed and adequately sized to provide a level of Stormwater Management that is equal to or greater than that which would be afforded by on-site practices and has a legally obligated entity responsible for long-term operation and maintenance of the stormwater treatment practice.

In instances where at least one of the conditions above applies, the City may grant a waiver from strict compliance with Stormwater Management provisions that are not achievable, if acceptable mitigation measures are provided.

Subd. 10. Stormwater Treatment Maintenance Plan and Agreement

During the application process, the City shall determine who the Responsible Party will be for ownership and maintenance of all Stormwater Treatment Practices.

The Responsible Party shall enter into a Maintenance Agreement with the City that documents all responsibilities for operation and maintenance of all Stormwater Treatment Practices. Such responsibility shall be documented in a maintenance plan and executed through a Maintenance Agreement. The Maintenance Agreement shall be executed and recorded against the parcel.

(a) Maintenance Agreement

The stormwater Maintenance Agreement shall be in a form approved by the City, shall describe the inspection and maintenance obligations of this section and shall, at a minimum:

(1) Designate the Responsible Party, which shall be permanently responsible for maintenance of the structural or nonstructural measures.

(2) Pass responsibility for such maintenance to successors in title.

(3) Grant the City and its representatives the right of entry for the purposes of inspecting all Stormwater Treatment Practices as described in Subd. 10(b) below.

(4) Allow the City the right to repair and maintain the facility, if necessary maintenance is not performed after proper and reasonable notice to the Responsible Party as described in Subd. 10(d) below.

(5) Include a maintenance plan that contains, but is not limited to the following:

(i) Identification of all structural Stormwater Treatment Practices.

(ii) A schedule for regular inspection, monitoring, and maintenance for each practice. Monitoring shall verify whether the practice is functioning as designed and may include, but is not limited to quality, temperature, and quantity of runoff.

(iii) Identification of the Responsible Party for conducting the inspection, monitoring, and maintenance for each practice.

(6) Identify a schedule and format for reporting compliance with the Maintenance Plan to the City.

(b) Inspection of Stormwater Facilities

Inspection programs shall be established on any reasonable basis, including but not limited to: routine inspections; random inspections; inspections based upon complaints or other notice of possible violations; inspection of drainage basins or areas identified as higher than typical sources of sediment or other contaminants or pollutants; inspections of businesses or industries of a type associated with higher than usual discharges of contaminants or pollutants or with discharges of a type which are more likely than the typical discharge to cause violations of state or federal water or sediment quality standards or the National Pollutant Discharge Elimination System (NPDES) stormwater permit; and joint inspections with other agencies inspecting under environmental or safety laws. Inspections may include, but are not limited to, reviewing maintenance and repair records; sampling discharges, surface water, groundwater, and material or water in drainage control facilities; and evaluating the condition of drainage control facilities and other stormwater treatment practices.

When any new Stormwater Treatment Practice is installed on private property, or when any new connection is made between private property and a public drainage control system, sanitary sewer, or combined sewer; the property owner shall grant to the City the right to enter the property at reasonable times and in a reasonable manner for the purpose of inspection. This includes the right to enter a property when the City has a reasonable basis to

believe that a violation of this ordinance is occurring or has occurred, and to enter when necessary for abatement of a public nuisance or correction of a violation of this ordinance.

(c) Records of Installation and Maintenance Activities
The Responsible Party shall make records of the installation and of all maintenance and repairs of the stormwater treatment practices, and shall retain the records for at least three (3) years. These records shall be made available to the City during inspection of the Stormwater Treatment Practice and at other reasonable times upon request.

(d) Failure to Maintain Practices
If a Responsible Party fails or refuses to meet the requirements of the Maintenance Agreement, the City, after reasonable notice, may correct a violation of the design standards or maintenance needs by performing all necessary work to place the Stormwater Treatment Practice in proper working condition. In the event that the Stormwater Treatment Practice becomes a danger to public safety or public health, the City shall notify the Responsible Party in writing. Upon receipt of that notice, the Responsible Party shall have thirty days to perform maintenance and repair of the facility in an approved manner. After proper notice, the City may specially assess the owner(s) of the Stormwater Treatment Practice for the cost of repair work and any penalties; and the cost of the work shall be assessed against the property and collected along with ordinary taxes by the county.

Subd. 11. Financial Security

(a) The City shall require the submittal of a letter of credit or other financial security in a form acceptable to the City in order to insure that the Stormwater Treatment Practices are installed by the permit holder as required by the approved Stormwater Management Plan. The amount of the security shall be 150% of the total estimated construction cost of the Stormwater Treatment Practices approved, with the exception of Major Single-family Residential Projects, which shall be 50% of the total estimated construction cost. The performance security shall contain forfeiture provisions for failure to complete work specified in the Stormwater Management Plan.

(b) The security shall be released in full only upon submission of "as built plans" and written certification by a registered professional engineer that the Stormwater Treatment Practice has been installed in accordance with the approved plan and other applicable provisions of this ordinance. The City will make a final inspection of the Stormwater Treatment Practice to ensure that it complies with the approved plan and the provisions of this ordinance. Provisions for a partial pro-rata release of the security based on the completion of various development stages may be done at the discretion of the City.

Subd. 12. Notice of Construction Commencement

The Applicant must notify the City in advance before the commencement of construction. Regular inspections of the Stormwater Treatment Practice construction shall be conducted by the staff of the City or certified by a professional engineer or their designee, and the Applicant shall be responsible for the costs of such inspections. All inspections shall be documented and written reports prepared that contain the following information:

(a) the date and location of the inspection,
(b) whether construction is in compliance with the approved Stormwater Management Plan,
(c) variations from the approved construction specifications,
(d) any violations that exist.

If any violations are found, the Applicant shall be notified in writing of the nature of the violation and the required corrective actions. No added work shall proceed until any violations are corrected and all work previously completed has received approval by the City.

Subd. 13. As Built Plans

All Applicants are required to submit actual "as built" plans for any Stormwater Treatment Practices located on-site after final construction is completed. As-built plans must show the final design specifications for all Stormwater Treatment Practices, and the plans must be certified by a professional engineer. A final inspection by the City is required before the release of any performance securities can occur. The City may waive certain requirements for the as built plans in the case of a Major Single-Family Residential Project or a Minor Expansion Project, provided the Applicant provides sufficient information to verify that the alternative improvements were installed as designed.

Subd. 14 Violations

Any person who commences or conducted Land Disturbance Activity contrary to this ordinance is guilty of a misdemeanor and may be prosecuted as such, restrained by injunction or otherwise abated in a manner provided by law.

(a) Notice of Violation

When the City determines that an activity is not being carried out in accordance with the requirements of this ordinance, it shall issue a written notice of violation to the owner of the property. The notice of violation shall contain:

(1) the name and address of the owner or Applicant,
(2) the address when available or a description of the land upon which the violation is occurring,
(3) a statement specifying the nature of the violation,
(4) a description of the remedial measures necessary to bring the development activity into compliance with this ordinance and a time schedule for the completion of such remedial action,
(5) a statement of the penalty or penalties that shall or may be assessed against the person to whom the notice of violation is directed, and
(6) a statement that the determination of violation may be appealed to the City by filing a written notice of appeal within fifteen (15) days of service of notice of violation.

(b) Stop Work Orders

Persons receiving a notice of violation will be required to halt all construction activities.

This Stop Work Order will be in effect until the City confirms that the Land Disturbance Activity is in compliance and the violation has been satisfactorily addressed. Failure to address a notice of violation in a timely manner may result in civil, criminal, or monetary penalties in accordance with the enforcement measures authorized in this ordinance.

(c) Civil and Criminal Penalties

In addition to or as an alternative to any penalty provided herein or by law, any person who violates the provisions of this ordinance shall be guilty of a misdemeanor and subject to prosecution. Such person shall be guilty of a separate offense for each day during which the violation occurs or continues.

(d) Restoration of Lands

Any violator may be required to restore land to its undisturbed condition. In the event that restoration is not undertaken within a reasonable time after notice, the City may take necessary corrective action, the cost of which may, after notice and opportunity for hearing, be specially assessed against the property and collected along with the ordinary taxes by the county.

Subd. 15. Holds on Occupancy Permits

Occupancy permits will not be granted until all Stormwater Treatment Practices have been installed and accepted by the City, or a financial guarantee in a form acceptable to the City has been submitted to ensure completion.

Subd. 16. Duration of Approval; Revocation of Approval

(a) Approved plans issued under this section shall be valid from the date of approval through the date the City notifies the owner that all stormwater treatment practices have passed the final inspection required under approved conditions, or the approval is revoked.

(b) Revocation of the stormwater approval may be made by the City if requirements within this ordinance are not fulfilled, or the owner or Applicant is unable to fulfill the ordinance requirements. If an approval is revoked, the Applicant must resubmit a Stormwater Management Plan prior to proceeding with any subsequent Land Disturbance Activity.

Subd. 17. Appeals

Any person aggrieved by the action of any official charged with the enforcement of this ordinance, as the result of the disapproval of a properly filed application for approval, issuance of a written notice of violation, or an alleged failure to properly enforce the ordinance in regard to a specific application, shall have the right to appeal the action to the City.

(a) The Applicant shall submit the appeal in writing and include supporting documentation.

(b) City staff shall make a decision on the appeal within 15 business days of receipt of a complete appeal application.

(c) The Applicant may appeal the decision of city staff to the city council. This appeal must be filed with the City within 30 days of City staff's decision.

Subd. 18 Compatibility with Other Permit and ordinance Requirements

This ordinance is not intended to interfere with, abrogate, or annul any other ordinance, rule or regulation, statute, or other provision of law. The requirements of this ordinance should be considered minimum requirements, and where any provision of this ordinance imposes restrictions different from those imposed by any other ordinance, rule or regulation, or other provision of law, whichever provisions are more restrictive or impose higher protective standards for human health or the environment shall take precedence.

Subd. 19. Severability

If the provisions of any article, section, subsection, paragraph, subdivision or clause of this ordinance shall be judged invalid by a court of competent jurisdiction, such order or judgment shall not affect or invalidate the remainder of any article, section, subsection, paragraph, subdivision or clause of this ordinance, which shall remain in full force and effect.

Section 828.41. Tree Preservation and Replacement.

Subd. 1. Purpose. The purpose of this ordinance is to promote, within the city, development that retains Medina's rural character, in which the natural environment is the dominant feature. Trees and landscaping are a major component of the natural environment, and the city recognizes that preservation and replanting of trees is important in order to maintain a healthy and desirable community. The city further recognizes that a certain amount of tree loss is an inevitable consequence of the development process, but that the reforestation of this valuable renewable resource will ultimately provide a long-term environmental and economic benefit.

Subd. 2. Function. The function of this ordinance includes but is not limited to:

(a) improving air quality;
(b) reducing noise pollution;
(c) improving water quality;
(d) preventing of soil erosion;
(e) conserving energy by providing natural insulation and shading;
(f) reducing the urban heat island effect;
(g) increasing property values by establishing tree buffers that provide privacy protection between conflicting land uses;
(h) providing habitat for wildlife, including birds that help control insects;
(i) enhancing the city's physical and aesthetic environment; and
(j) enhancing the quality of life and the general welfare of residents.

Subd. 3. Definitions. The following words and terms, wherever they occur in this ordinance, are defined as follows:

(a) "Best Management Practices" ("BMP") are the Erosion and sediment control practices as well as conservation or Low Impact Development principles related to Tree preservation and removal, that are the most effective and practicable for controlling, preventing and minimizing negative impacts on existing Trees,

CHAPTER 7.

PUBLIC AND PRIVATE UTILITIES

745. STORM WATER UTILITY ORDINANCE

Section 745.00 Storm Water Utility Ordinance

Subd. 1. Definitions. The following terms shall have the meanings given to them unless another meaning is clear from the context.

a) "billable acreage" means the parcel acreage minus wetlands, approved wetland buffers and approved conservation easements.

b) "residential equivalency factor or REF" means the amount of runoff generated by a typical 0.33 acre single-family residential parcel with 30% impervious surface, which represents the basic unit of the storm water utility's charge structure.

Subd. 2. Storm Water Utility. A storm water utility for the city of Medina is hereby established. The municipal storm sewer system shall be operated as a public utility pursuant to Minnesota Statutes, Section 444.075, from which revenue will be derived subject to the provisions of this section and Minnesota Statutes.

Subd. 3. Purpose of Funds Derived and Allocation of Revenue. The purpose of all funds derived from the storm water utility is to pay for all or part of the cost to construct, reconstruct, repair, enlarge, improve or obtain facilities and to maintain, operate and use the storm water management program as established by the city.

Subd. 4. Storm Water Utility Charges.

a) Charges for the use and availability of the system are to be determined through the use of a residential equivalent factor. Calculations for the storm water utility for other land uses shall be based upon their residential equivalency factor. The rates for commercial, industrial, institutional, and higher density residential land uses also take into consideration the amount of hard surface on the property and the acreage of the site.

b) Other land uses not matching a particular land use category shall be classified by the city administrator or designee so as to assign a residential equivalency factor, either by assigning them to the land use classification with the most similar hydrologic response or based on the amount of site impervious surface. Appeals from the city administrator's determination of the proper classifications may be made to the city council in the same manner as other appeals from administrative determinations.

c) The storm water utility charges for use of the city's storm water management facilities shall be established by ordinance and shall be just and equitable. Charges made for the use of the facilities may be fixed by reference to the square footage of the

property, adjusted for a reasonable calculation of storm water runoff, by reference to a reasonable classification of the types of premises to which the service is furnished, or by reference to the quantity, pollution qualities, and difficulty of disposal of the water, or on any other equitable basis including, but without limitation, any combination of those referred to above but not based on the amount of water consumed.

Subd. 5. Exemptions. The storm water utility charges established in subdivision 4 will not be charged against parcels with the following existing land use designations:

a) Public and private right-of-way;

b) Public open space;

c) Public parks and recreation; or

d) Single family residential or undeveloped parcels less than 0.08 acre in size.

For all land uses, billable acreage shall not include those portions of parcels covered by wetlands or wetland buffers or by conservation easements created pursuant to Minnesota Statutes, Chapter 84C or otherwise approved by the city.

Subd. 6. Residential Equivalency Factor (REF) Established. The residential equivalency factor for existing land use types in the city shall be as follows:

a) Agriculture – 1 REF per 10 billable acres, rounded down to a whole REF, with a minimum of one REF for each agriculture parcel;

b) Commercial – 6.4 REFs per billable acre;

c) Industrial – 6.4 REFs per billable acre;

d) Institutional – 4.3 REFs per billable acre;

e) Multi-Family Residential and Townhome (including common spaces) – 5.3 REFs per billable acre;

f) Private Recreation – 2.0 REFs per billable acre;

g) Rural Residential – 1 REF per 10 billable acres, rounded down to whole REF, with a minimum of one REF for each rural residential parcel;

h) Single-Family Detached and two-Family Residential – 1 REF per parcel; and

i) Undeveloped Land – 1 REF per 10 billable acres, rounded down to a whole REF, with a minimum of one REF for each agriculture parcel.

Subd. 7. Appeals. The city council may adopt policies providing for the adjustment of charges for parcels, based upon data supplied by affected property owners, such as: parcel boundaries, site impervious area, or delineated wetland area, which is substantially more accurate than the information used by the city for the parcel. The adjustment may be made only after making written application for an appeal to the city clerk and being granted approval from the city council. The required written application for an appeal may include submittal of a completed application form, property survey information, wetland delineation report, appeal fee, or other materials established from time to time by city procedure. Adjustments may not be made effective retroactively.

Subd. 8. Collections and Penalties.

a) The city shall render invoices for charges for the use and availability of the system. The city council may also establish billing areas or districts and bill charges by calendar quarters or monthly quarters or such periodic intervals as the city council shall determine suitable and necessary. Charges shall be payable to the city and may be rendered in conjunction with other utility billings.

b) Penalties and remedies for late payments or nonpayment of charges are the same as those applicable to billings rendered for water and sanitary sewer service. In the event a charge becomes delinquent, the city council may cause the delinquent charge to be levied against the property served by certifying to the county auditor the amount of such delinquent charge in accordance with state statute.

Amendment History of this Section

Adopted May 20, 2008 (Ord. 442). *A storm water utility ordinance was established under Section 745.00.*

Amended December 4, 2012 (Ord. 541). *Amended 745.00, Subd. 6 regarding residential equivalency factors.*

final reports, drawings and supplements:

i) An As-Graded Grading plan prepared by the Designer including original ground surface elevations, As-Graded ground surface elevations, lot drainage patterns and locations and elevations of all surface and subsurface drainage facilities. The Designer shall include a statement on the plan that to the best of his or her knowledge, the Grading was completed in accordance with the submitted Grading plan.

ii) A soils-grading report prepared by a Soils Engineer, including locations and elevations of field density tests, summaries of field and laboratory tests and other substantiating data and comments on any changes made during Grading and their effect on the recommendations made in the Soils Engineering investigation report. The Soil Engineer shall render a finding as to the adequacy of the Site for the intended use.

iii) A geologic grading report prepared by an Engineering Geologist, including a final description of the geology of the property and any new information disclosed during the Grading and the effect of same on recommendations incorporated in the approved Grading plan. The Engineering Geologist shall render a finding as to the adequacy of the property for the intended use as affected by geologic factors.

b) Notification of Completion. The applicant shall notify the city when the Grading is ready for final inspection by the city. Final approval shall not be given by the city until all work, including installation of all drainage facilities and their protective devices and all Erosion-control measures, has been completed, turf has been established in accordance with the final reviewed Grading plan and the required reports have been submitted.

Subd. 18. Expiration of Grading Permit. Every Grading permit issued by the city pursuant to this ordinance shall expire and become null and void if the Grading authorized by the Grading permit is not commenced within ninety (90) days from the date of issuance of the Grading permit, or if the Grading authorized by the Grading permit is suspended or abandoned at any time after Grading is commenced for a period of one hundred eighty (180) consecutive days. The city may grant an extension for a Grading permit upon application by the applicant and provided that the proposed extension does not exceeded one year. In the event that a Grading permit expires, the applicant must apply for new Grading permit pursuant to the procedure set forth in this ordinance.

Subd. 19. Penalty. Any person convicted of violating this ordinance shall be guilty of a misdemeanor and shall be subject to a fine or imprisonment as specified by state statute. Such penalty may be imposed in addition to an action against the financial securities, a stop work order or suspension or revocation of the grading permit by the city.

Section 828.29. Construction Site Storm Water Runoff Control Ordinance

Subd. 1. Purpose. The purpose of this ordinance is to promote, preserve and enhance the natural resources within the City of Medina by regulating Land Disturbing or development activities that would have an adverse and potentially irreversible impact on water quality and unique and fragile environmentally sensitive land. This ordinance sets forth the following standards and procedures in order to control land disturbances and/or development activities that may impact water quality and/or impact environmentally sensitive land.

Subd. 2. Definitions. The following words and terms, wherever they occur in this ordinance, are defined as follows:

a) "Best Management Practices" or "BMPs" means erosion and Sediment Control and water quality management practices that are the most effective and practicable means of controlling, preventing, and minimizing degradation of Surface Water, including, but not limited to, avoidance of impacts, construction-phasing, minimizing the length of time soil areas are exposed, or prohibitions or other management practices published by state or designated area-wide planning agencies.

b) "Contractor" means the party who signs the construction contract or development agreement with the city to construct a project. Where the construction project involves more than one contractor, the general contractor shall be the contractor that is responsible pursuant to the obligations set forth in this ordinance.

c) "Dewatering" means the removal of water for construction activity such as the removal of temporary sediment basin water or appropriated surface or groundwater to dry and/or solidify a construction site.

d) "Erosion" means the wearing away of the ground surface as a result of the movement of wind, water, ice and/or land disturbance activities.

e) "Erosion Prevention" means measures employed to prevent Erosion. Examples include, but are not limited to: soil stabilization practices, limited grading, mulch, temporary or Permanent Cover, and construction phasing.

f) "Final Stabilization" means:
   i) All soil disturbing activities at the site have been completed and a uniform (e.g., evenly distributed, without large bare areas) perennial vegetative cover with a density of 70 percent of the native background vegetative cover for the area has been established on all unpaved areas and areas not covered by permanent structures, or equivalent permanent stabilization measures (such as the use of riprap, gabions, or geotextiles) have been employed;
   ii) For individual lots in residential construction by the Contractor, the Contractor must either: (A) complete Final Stabilization as specified above, or (B) establish temporary stabilization including perimeter controls for an individual lot prior to occupation of the structure. If the

Contractor chooses (B), it must inform the Owner in writing of the need for, and benefits of, Final Stabilization;

iii) For construction projects on land used for agricultural purposes (e.g., pipelines across crop or range land) Final Stabilization may be accomplished by returning the disturbed land to its preconstruction agricultural use. Areas disturbed that were not previously used for agricultural activities, such as buffer strips immediately adjacent to Surface Waters and drainage systems and areas which are not being returned to their preconstruction agricultural use must meet the Final Stabilization criteria in subparts (i) or (ii) above;

iv) The Contractor must clean out all Sediment from conveyances and from temporary sedimentation basins that are to be used as permanent water quality management basins. Sediment must be Stabilized to prevent it from washing back into the basin, conveyances or drainage ways discharging off-site or to surface waters. The cleanout of permanent basins must be sufficient to return the basin to design capacity. All drainage ditches constructed to drain water from the site after construction is complete must be Stabilized to preclude Erosion; and

v) All temporary synthetic and structural Erosion Prevention and Sediment Control BMPs (such as silt fence) must be removed as part of the Final Stabilization on the site.

g) "Impervious Surface" means a constructed hard surface that either prevents or retards the entry of water into the soil and causes water to run off the surface in greater quantities and at an increased rate of flow than existed prior to development. Examples include rooftops, sidewalks, patios, parking lots, storage areas and concrete, asphalt, or gravel driveways or roads.

h) "Land Disturbing Activity" means any land change that may result in soil Erosion from water or wind and the movement of Sediments into or upon waters or lands within the city's jurisdiction, including, but not limited to, clearing, grubbing, grading, excavating, transporting and filling.

i) "Owner" means the person or entity with a legal or equitable interest in the land on which the construction activities will occur.

j) "Permanent Cover" shall mean "Final Stabilization."

k) "Sediment" means the product of an Erosion process; solid material both mineral and organic, that is in suspension, is being transported, or has been moved by water, air or ice, and has come to rest on the earth's surface either above or below water level.

l) "Sediment Control" means methods employed to prevent Sediment from leaving the site. Sediment Control practices include silt fences, sediment traps, earth dikes, drainage swales, check dams, subsurface drains, pipe slope drains, storm drain inlet protection and temporary or permanent sedimentation basins.

m) "Stabilized" means the exposed ground surface after it has been covered by appropriate materials such as mulch, staked sod, riprap, wood fiber blankets, or other material that prevents Erosion from occurring. Grass seeding is not considered stabilization.

n) "Storm Water" shall have the meaning given to it by Minnesota Rule 7077.0105, subpart 41(b).

o) "Storm Water Pollution Prevention Plan" means a plan for storm water discharge that includes Erosion Prevention measures and Sediment Controls that, when implemented, will minimize soil Erosion on a parcel of land and minimize off-site nonpoint pollution to the maximum extent practicable.

p) "Surface Water or Waters" means all streams, lakes, ponds, marshes, wetlands, reservoirs, springs, rivers, drainage systems, waterways, watercourses, wells, reservoirs, aquifers, irrigation systems and all other bodies or accumulations of water, surface or underground, natural or artificial, public or private.

q) "Temporary Erosion Protection" means short term methods employed to prevent Erosion. Examples of these methods include: straw, wood fiber blanket, wood chips and erosion netting.

Subd. 3. Applicability. Every individual or entity applying for a permit to allow Land Disturbing Activities of one acre or greater, including activities on land that is part of a common plan for development that collectively will disturb land one acre or greater must submit a Storm Water Pollution Prevention Plan to the city engineer. No building permit, subdivision approval or development permit to allow Land Disturbing Activities shall be issued by the city until approval of the Storm Water Pollution Prevention Plan or a waiver of the approval requirement has been obtained in strict conformance with the provisions of this ordinance. Any Land Disturbing Activity that is less than one acre that is issued by the city must adhere to subdivisions 7 and 9 of this ordinance, with the exception of the inspection and record keeping requirements of these subdivisions.

Subd. 4. Exemptions. The following activities are exempt from the Storm Water Pollution Prevention Plan requirement of this ordinance:

a) Any part of property located in a subdivision if the preliminary plat for the subdivision has been approved by the city council on or before the effective date of this ordinance;

b) Property for which a building permit has been approved by the city on or before the effective date of this ordinance;

c) Installation of fence, sign, telephone, cable television, electric and other kinds of posts or poles, or utility lines or service connections to these utilities which result in creating under one acre of exposed soil;

d) Emergencies posing an immediate danger to life or property, or substantial flood or fire hazards;

e) Routine agricultural crop management practices;

f) Digging and filling of graves at a cemetery; or

g) Refuse disposal sites controlled by other governmental regulations.

Subd. 5. Storm Water Pollution Prevention Plan Submittal Procedures.

a) Submittal. Every individual or entity that has applied for a permit pursuant to this ordinance shall submit a Storm Water Pollution Prevention Plan to the city's zoning administrator in accordance with the requirements and approval standards set forth in subdivisions 6 and 7 of this ordinance. No building permit, subdivision approval or permit to allow Land Disturbing Activities shall be issued until the city engineer approves this Plan. If it chooses, the applicant may have the Storm Water Pollution Prevention Plan reviewed by the appropriate departments of the city prior to submitting the Plan.

b) Financial Security and Fees. All Storm Water Pollution Prevention Plan submittals shall be accompanied by a letter of credit, or cash equal to the required escrow amount and a separate check for deposit for administrative fees. All escrow and administrative fee deposit amounts shall be determined annually by the city council through a resolution that adopts the city's fee schedule.

Subd. 6. Storm Water Pollution Prevention Plan Requirements. At a minimum, the Storm Water Pollution Prevention Plan shall contain the following information:

a) The name and address of the applicant, a legal description of the site, north point, date and scale of drawing and number of sheets;

b) An existing site map: a map of existing site conditions showing the site and immediately adjacent areas, which shall include the following information;

i) Location of the tract by an insert map at a scale sufficient to clearly identify the location of the property and giving such information as the names and numbers of adjoining roads, railroads, utilities, subdivisions and districts or other landmarks;

ii) Existing topography with a contour interval appropriate to the topography of the land but in no case having a contour interval greater than two feet;

iii) A delineation of all Surface Waters located on and immediately adjacent to the site, including depth of water, a description of all vegetation which may be found in the water, a statement of general water quality and any classification given to the water body or wetland by the Minnesota

Department of Natural Resources, the Minnesota Pollution Control Agency, and/or the United States Army Corps of Engineers;

iv) The location and dimensions of existing Storm Water drainage systems and natural drainage patterns on and immediately adjacent to the site delineating the direction and the rate the Storm Water is conveyed from the site, identifying the receiving stream, river, public water, or wetland and setting forth those areas of the unaltered site where Storm Water collects;

v) A description of the soils of the site, including a map indicating soil types of areas to be disturbed as well as a soil report containing information on the suitability of the soils for the type of development proposed and for the type of sewage disposal proposed which describes any remedial steps to be taken by the applicant to render the soils suitable;

vi) The location and type of vegetative cover on the site and clearly delineating any vegetation proposed for removal; and

vii) 100 year floodplain, flood fringes and floodways boundaries.

c) A site construction plan which shall include the following information:

i) Locations and dimensions of all proposed Land Disturbing Activities and any phasing of those activities;

ii) Locations and dimensions of all temporary soil or dirt stockpiles;

iii) Locations and dimensions of all Erosion Prevention measures and Best Management Practices necessary to meet the requirements of this ordinance;

iv) Schedule of anticipated start and completion dates of each Land Disturbing Activity including the dates of installation of Erosion Prevention measures for each phase needed to meet the requirements of this ordinance; and

v) Provisions for maintenance of the Erosion Prevention measures prior to Final Stabilization.

d) A plan of final site conditions, which shall include the following information:

i) Finished grading shown at contours at the same interval as provided on the existing site map to clearly indicate the relationship of proposed changes to the site's existing topography and remaining features;

ii) A landscape plan, drawn to an appropriate scale, including dimensions and distances and the location, type, size and description of all proposed landscape materials that will be added to the site;

iii) A drainage plan of the developed site delineating in which direction and the rate Storm Water will be conveyed from the site and setting forth the areas of the site where Storm Water will be allowed to collect;

iv) The proposed size, alignments and intended use of any structures to be erected on the site;

v) A clear delineation and tabulation of all Impervious Surfaces to be installed on the site, including a description of the surfacing material to be used;

vi) Any other information pertinent to the particular project which in the opinion of the applicant is necessary for the review of the project; and

vii) A copy of the applicant's Minnesota Pollution Control Agency's Permit for discharging Storm Water from construction activity (MN R100001).

Subd. 7. Storm Water Pollution Prevention Plan Approval and Performance Standards. No Storm Water Pollution Prevention Plan that fails to meet the standards set forth in this ordinance shall be approved by the city. All of the following requirements shall be adhered to during the construction on the site.

a) Site Dewatering and Basin Draining: Water pumped from the site shall be treated by temporary sedimentation basins, grit chambers, sand filters, upflow chambers, hydrocyclones, swirl concentrators or other appropriate controls as appropriate. Water shall not be discharged in a manner that causes Erosion, scour, sedimentation or flooding of the site, receiving channels or wetlands.

b) Construction Site Waste:

i) Solid waste: All waste and unused building materials (including, but not limited to, collected Sediment, asphalt and concrete millings, floating debris, paper, plastic, fabric, demolition debris) must be disposed of properly and shall comply with disposal requirements as set forth by the Minnesota Pollution Control Agency.

ii) Hazardous/toxic materials: Oil, gasoline, paint and any hazardous substances must be properly stored, including secondary containment, to prevent spills, leaks or other discharges. Access to storage areas for these materials must be restricted in order to prevent vandalism. All storage and disposal of hazardous or toxic materials must be in compliance with requirements set forth by the Minnesota Pollution Control Agency.

iii) Liquid waste: All other non Storm Water discharges (including, but not limited to, concrete truck washout, vehicle washing or maintenance spills) conducted during the construction activity shall not be discharged to any Surface Waters.

iv) External washing of any equipment shall be limited to a defined area of the site. All runoff must be contained. Waste must be disposed of properly. No engine degreasing shall be allowed on the site.

v) All liquid and solid waste generated by any concrete washout operations on the site must be contained in a leak proof facility or impermeable liner. Concrete waste must not come into contact with the ground. No runoff from concrete washout operations or areas is permitted. Concrete waste must be disposed of properly and in compliance with applicable Minnesota Pollution Control regulations.

c) Tracking: All roads, access drives and parking areas must utilize a temporary tracking pad and must be of sufficient width and length to prevent Sediment from

being tracked onto public or private roadways and/or the Storm Water conveyance system. Temporary tracking pads must be installed and maintained in all locations on the site where vehicles enter and exit.

d) Storm Drain Inlet Protection: All storm drain inlets must be protected by appropriate Best Management Practices during construction until all sources with potential for discharging to the inlet have been Stabilized.

e) Site Erosion Control: The following criteria shall apply only to construction activities that result in runoff leaving the site:

i) Channelized runoff from adjacent areas passing through the site shall be diverted around disturbed areas, if practical. Otherwise, the channel shall be protected as follows: sheet flow runoff from adjacent areas greater than 10,000 square feet in area shall also be diverted around disturbed areas, unless shown to have resulted runoff rates of less than 0.5 feet per second across the disturbed area for a one hundred year storm event. Diverted runoff shall be conveyed in a manner that will not cause Erosion, scour, Sedimentation or flooding of the conveyance and receiving waters;

ii) All activities on the site shall be conducted in a logical sequence to minimize the area of bare soil exposed at any one time;

iii) Runoff from the entire disturbed area on the site shall be controlled by meeting subsections A through E of this subpart:

All exposed soil areas must have Temporary Erosion Protection or Permanent Cover for the exposed soil areas for the entire year as soon as possible, but in no case any later than 14 days after construction activity on that portion of the site has temporarily or permanently ceased;

B) The normal wetted perimeter of a temporary or permanent drainage ditch that drains water for the project site or diverts water around the project must be Stabilized. Stabilization must occur within 24 hours of connecting to a surface water;

C) Pipe outlets must have temporary or permanent energy dissipation within 24 hours of connection to a surface water;

D) When possible, all slopes must be graded in such a fashion that any tracking marks made from heavy equipment are perpendicular to the slope in accordance with the city's engineering standards, detail ERO-22; and

E) Land Disturbance Activities that are one acre or greater that drain to a discharge point within the distance of a Special or Impaired

Water as specified in the current version of the Minnesota Pollution Control Agency Construction Site General Permit must be Stabilized as soon as possible, but in no case later than seven days after construction activity in that portion of the site has temporarily or permanently ceased.

F) Land Disturbance Activities that are less than one acre that drain to a discharge point within 1000 feet of a Special or Impaired Water must be Stabilized as soon as possible, but in no case later than seven days after construction activity in that portion of the site has temporarily or permanently ceased.

f) Site Sediment Control: The following criteria shall apply only to construction activities that result in runoff leaving the site:

i) Silt fences or equivalent control measures shall be placed on the downslope sides of the site and installed along the contour. If a channel or area of concentrated runoff passes through the site, silt fences shall be placed along the channel edges to reduce the amount of Sediment reaching the channel. The use of silt fences or equivalent control measures must be properly maintained during construction activities.

ii) For sites that have more than 10 acres disturbed at one time, or if a channel originates in the disturbed area, one or more temporary or permanent sedimentation basins shall be constructed. Each sedimentation basin shall have a surface area of at least one percent of the area draining to the basin, be at least three feet deep and be constructed in accordance with accepted design specifications. Sediment shall be removed on a regular basis in order to maintain a minimum depth of three feet. The basin discharge rate shall also be sufficiently low as to not cause Erosion, scour, sedimentation or flooding of the discharge channel or receiving water.

iii) Any soil or dirt storage piles containing more than 10 cubic yards of material should not be located with a downslope drainage length of less than 25 feet from the toe of the storage pile to a roadway or drainage channel. If remaining for more than 14 days, it shall be Stabilized. Erosion from piles which will be in existence for less than 14 days shall be controlled by placing straw bales or silt fence barriers around the pile. In-street utility repair or construction soil or dirt storage piles located closer than 25 feet of a roadway or drainage channel must be covered with tarps or suitable alternative controls. All downstream storm drain inlets must be protected with an appropriate inlet protection device.

g) Site Restoration: All areas on the site that are disturbed during construction must be restored. The types of permanent restoration being used on the site shall be

clearly shown on the plans including, but not limited to, sod, seed, impervious cover and structures. In areas where vegetation is to be established, at least six inches of topsoil must be used. In areas where vegetation will be maintained, the city encourages the use of a combination of topsoil and compost equivalent to six inches of topsoil. Areas in which the topsoil or topsoil/compost mixture has been placed and finish-graded or areas that have been disturbed and other grading or site building construction operations are not actively underway must be temporarily or permanently restored as set forth in the following requirements:

i) Areas that have a slope of less than 3:1 must be seeded and mulched within 14 days of the area not being actively worked.

ii) Areas that have a slope greater or equal to 3:1 must be seeded and Erosion control blankets must be placed in accordance with city engineering standard detail ERO-21 within 14 days of the area not being actively worked.

iii) All seeded areas must either be mulched and disc anchored, hydromulched, or covered by Erosion control blankets to reduce Erosion and protect the seed. Temporary or permanent mulch must be disc anchored and applied at a uniform rate of two tons per acre with at least 90 percent coverage.

h) Special and Impaired Waters:

i) Additional BMPs together with enhanced runoff controls are required for discharge from a site to Special and Impaired Water as defined by Appendix A of the Minnesota Pollution Control Agency General Storm Water Permit for Construction Activity, parts A, B and section 1 of part C.

ii) For areas of the site that drain to a discharge point that is within the distance as specified in the current version of the Minnesota Pollution Control Agency General Storm Water Permit for Construction Activity and drains to a Special or Impaired Water and the Land Disturbance Activity is one acre or greater in size, the BMPs identified in Appendix A, part C of the Minnesota Pollution Control Agency General Storm Water Permit for Construction Activity are required. Land Disturbance Activities that are less than one acre in size must comply with this requirement only if they are draining to a Special or Impaired Water and are within 1000 feet of that body of water.

Subd. 8. Storm Water Pollution Prevention Plan Review Procedures.

a) Process: Storm Water Pollution Prevention Plans meeting the requirements of this ordinance must be approved by the city engineer or his or her designated representative in accordance with the standards of this ordinance.

b) Duration: Storm Water Pollution Prevention Plan approval shall expire one year from the date of the city engineer's approval of the Plan unless construction has commenced. However, if prior to the date of expiration of the approval, the applicant makes a written request to the city engineer for an extension of time to commence construction setting forth the reasons for the requested extension, the city engineer may grant one extension that shall not exceed one year. Receipt of any applicant's request for an extension shall be acknowledged in writing by the city engineer within 15 days of receipt. The city engineer shall make a decision on the extension request within 45 days of receipt.

c) Condition: A Storm Water Pollution Prevention Plan may be approved subject to compliance with conditions imposed by the city that are reasonable and necessary to ensure that the requirements of this ordinance are met. Conditions that may be imposed include, but are not limited to: limiting the size, kind or character of the proposed improvements; requiring the construction of structures, drainage facilities, storage basins and other facilities; requiring replacement of vegetation; establishment of monitoring procedures; staging the work over a period of extended time; requiring alteration of the site's design to insure buffering; or requiring conveyance of necessary lands or easements to the city or other public entity.

Subd. 9. Inspection and Maintenance Requirements.

a) The applicant shall be responsible at all times for the maintenance and proper operation of all Erosion Prevention and Sediment Control measures. The applicant shall also inspect, maintain and repair all disturbed surfaces, Erosion Prevention measures, Sediment Control measures and soil stabilization measures on the site at least once each day that any work is performed on the site. If no work is performed on the site on a daily basis, the inspection, maintenance and repair by the applicant shall continue at least once every seven days, until the Land Disturbing Activity has ceased. Thereafter, the applicant shall continue perform these responsibilities at least once every seven days until Stabilization. The applicant shall maintain a record of all of its activities required by this subpart for inspection by the city upon request.

b) The applicant must inspect the construction project within 24 hours of a rainfall event of one-half inch or greater in a 24 hour period.

c) All inspections and maintenance activities conducted on the site during construction must be recorded in writing and must be retained with the Storm Water Pollution Prevention Plan. Records of each inspection and maintenance activity shall include the following information:

i) Date and time of inspection;
ii) Name(s) of persons conducting the inspection;
iii) Findings of inspections, including recommendations for corrective actions;

iv) Corrective actions taken, including the dates, times and the name of the party completing the corrective action;

v) Date and the amount of rainfall events that are greater than one-half inch in a 24 hour period; and

vi) Documentation of any changes made to the Storm Water Pollution Prevention Plan.

d) If upon inspection of the site, the city finds that any private storm water management facilities or Erosion Prevention and Sediment Control measures require maintenance, repair, or replacement, but such deficiencies do not create a critical or imminent threat to adjacent properties, the environment, or other storm water facilities; the applicant shall be sent a written notice that includes the city's findings, what actions are required to correct the situation, and a date or dates by which such actions must be completed. The applicant shall have a maximum of seven days from the date of the notice to reply to the city in writing indicating his or her response to the notice. If the applicant does not complete the necessary activities stipulated by the city in the notice by the date(s) set forth in the notice, the city council after notice and public hearing may order that such activities be completed by the city or its designated contractor and that all costs associated with such activities be charged to the applicant and may be drawn from the escrow amount. If the escrow amount is insufficient, the amount incurred by the city that is outstanding may be assessed by the city council by levying the amount upon the properties benefiting from and utilizing the storm water facilities that were maintained, repaired or replaced by the city. This amount may be certified by the city to the County Auditor of Hennepin County, Minnesota and shall be collected in the same manner as the collection of real estate taxes.

e) All Erosion and Sediment BMPs must be inspected to ensure integrity and effectiveness. All nonfunctional BMPs must be repaired, replaced or supplemented with a functional BMP. The applicant shall investigate and comply with the following BMP inspection and maintenance requirements:

i) All silt fences must be repaired, replaced or supplemented when they become nonfunctional or the Sediment reaches one third of the height of the fence. Repairs shall be made within 24 hours of discovery or as soon as field conditions allow access.

ii) Temporary and permanent sedimentation basins must be drained and the Sediment must be removed when the depth of the Sediment collected in the basin reaches one-half the storage volume. Drainage and removal must be completed within 72 hours of discovery or as soon as field conditions allow access.

iii) Surface water, including drainage ditches and conveyance systems, must be inspected for evidence of Sediment being deposited by Erosion. The applicant shall remove all deltas and Sediment deposited in surface

waters, including drainage ways, catch basins, and other drainage systems and must restabilize the areas where Sediment removal results in exposed soil. The removal and stabilization must take place within seven days of discovery unless precluded by legal, regulatory or physical access constraints. In the event of an access constraint, the applicant shall use all reasonable efforts to obtain access. If access is precluded, removal and stabilization must take place within seven calendar days of obtaining access. The applicant is responsible for contacting all local, regional, state and federal authorities and obtaining any required permits prior to conducting any work.

iv) Construction site vehicle exit locations must be inspected for evidence of off-site Sediment tracking onto paved surfaces. Tracked Sediment must be removed from all off-site paved surfaces within 24 hours of discovery, or if possible, a shorter amount of time.

v) The applicant is responsible for the operation and maintenance of temporary and permanent water quality management BMPs, as well as Erosion Prevention and Sediment Control BMPs for the duration of the construction work on the site. The applicant remains responsible until another party has assumed control over all areas of the site that have not been finally Stabilized or the site has undergone Final Stabilization and a NOT has been submitted to the Minnesota Pollution Control Agency.

vi) If Sediment escapes the construction site, off-site accumulations of Sediment must be removed in a manner and at a frequency sufficient to minimize off-site impacts.

f) All infiltration areas must be inspected to ensure that no Sediment from ongoing construction activities is reaching the infiltration area and these areas are protected from compaction caused by construction equipment driving across the infiltration area.

g) The applicant must ensure Final Stabilization of the project. The applicant must submit a NOT within 30 days of Final Stabilization being achieved, or another party assuming control on all areas of the project that have not achieved Final Stabilization.

Subd. 10. Notification.

a) The applicant shall notify the City at the following points during construction:
   i) Upon completion of the installation of perimeter Erosion and sedimentation controls;
   ii) Upon completion of Land Disturbing Activities but before putting into place measures for final soil stabilization and Permanent Cover;
   iii) When the site has been permanently Stabilized and Permanent Cover has been established; and

iv) When all Temporary Erosion Protection and Sediment Controls have been removed from the site.

Subd. 11. Noncompliance and Enforcement Procedures.

a) Notice of Noncompliance. In the event that any work on the site does not conform to the approved Storm Water Pollution Prevention Plan or any of the requirements listed in the provisions of this ordinance, the city engineer or his or her designee shall issue a written notice of noncompliance to the applicant detailing the corrective actions necessary for compliance. The applicant shall conduct the corrective actions within the time period determined by the city and stated in the notice. If an imminent hazard exists, the city may require that the corrective work begin immediately.

b) Stop Work Order. If corrective actions identified in the notice of noncompliance are not completed by the time period set forth by the city in the notice, the city engineer or his or her designee may issue an order for the city to stop all inspections required for land use or building permit approvals until all corrective actions identified in the notice of noncompliance are completed. The applicant shall notify the city engineer or his or her designee upon completion of the corrective action. Once the city engineer has verified that corrective action has been taken, he or she shall inform the city and the city shall resume inspections on the site no later than the following business day.

c) Action Against the Financial Securities. If the corrective action identified in the notice of noncompliance are not completed within the time specified in the notice, the city may act against the financial security if any of the conditions listed below exist. The city shall use funds from this security to finance any corrective or remedial work undertaken by the city or a contractor under contract to the city in order to reimburse the city for its costs incurred in the process of corrective work including, but not limited to, staff time and attorneys' fees.

i) The applicant ceases Land Disturbing Activities and/or filling and abandons the site prior to completion of the city-approved grading plan;
ii) The applicant fails to conform to the city-approved grading plan and/or the Storm Water Pollution Prevention Plan, or related supplementary instructions issued by the city;
iii) The techniques utilized under the Storm Water Pollution Prevention Plan fail within one year of installation; or
iv) Emergency action is required pursuant to subpart (d) listed below.

d) Emergency Action. If circumstances exist such that noncompliance with this ordinance poses an immediate danger to the public health, safety or welfare, as determined by the city, the city may take emergency preventative action. Prior to taking emergency preventative action, the city shall attempt every reasonable measure possible to contact and direct the applicant to take the necessary action.

e) Misdemeanor. Any person who violates any provision of this section shall be guilty of a misdemeanor and shall be subject to a maximum fine or maximum period of imprisonment, or both, as specified by Minnesota Statutes Section 609.03. Each additional day that the property remains in violation of this section shall constitute a separate violation of this section and may be prosecuted accordingly.

f) Nothing contained herein shall prevent the city from taking such other lawful action as is necessary to prevent or remedy any violation of this section, including, but not limited to, seeking a civil injunction or a restraining order.

Subd. 12. Right of Entry.

a) Right of Entry and Inspection: The applicant shall allow the city and its authorized representatives, upon presentation of credentials to:

i) Enter upon the site for the purpose of obtaining information, examination of records, conducting surveys or investigations;
ii) Bring such equipment upon the site as is necessary to obtain information, conduct surveys or investigations;
iii) Examine and copy any books, papers, records, or memoranda pertaining to activities or records required to be kept pursuant to this ordinance;
iv) Inspect the Erosion control and Sediment Control measures required by the City or the Storm Water Pollution Prevention Plan; and
v) Sample and monitor any items or activities pertaining to any existing easements, covenants, or deed restrictions. However, where this ordinance imposes greater restrictions, the provisions of this ordinance shall prevail. All other ordinances inconsistent with this ordinance are hereby repealed to the extent of the inconsistency only.

Section 828.31. Buffer Yard Requirements.

Subd. 1. Generally. A buffer yard is a combination of distance, plantings, berms, and fencing. The purpose of a buffer yard is to reduce the negative impacts that may result when land uses of different intensities abut each other or when residential uses abut primary roadways.

Subd. 2. Buffer yards required. A buffer yard shall be required in the following situations:

(a) Adjacent to less intensive zoning district. A buffer yard shall be required when a developing property is adjacent to or across a street from property of a less intensive zoning district, as summarized by the following table.

(b) Adjacent to Collector or Arterial Roadways. A buffer yard shall be required along collector and arterial roadways if the property on the opposite side of the roadway is of the same or a more intensive zoning district, as summarized by the following table.

CHAPTER 8

LAND AND BUILDING REGULATIONS

827. ZONING - ZONING DISTRICTS

SHORELAND OVERLAY DISTRICT

Section 827.01. Shoreland Overlay District - Purpose and Authorization.

(a) The City recognizes the consequences to the public health, safety and general welfare from the indiscriminate use of the shorelands of public waters. The purpose of this district is to control the density and location of development in the shorelands of the public waters of the City in order to preserve and enhance the quality of surface waters, preserve the economic and natural environmental characteristics of shorelands, and provide for the wise use of public waters and related land resources in the City.

(b) This ordinance is adopted in compliance with the Shoreland Development Act, Minnesota Statutes, sections 103F.201 et seq. and the regulations promulgated thereunder and the Municipal Planning Act, Minnesota Statutes, § 462.351 et seq. It is intended to be in conformance with state requirements and to establish minimum standards for development within the shoreland overlay district.

Section 827.03. Water Bodies Included in the Shoreland Overlay District.

(a) The regulations of the shoreland overlay district in the City of Medina shall apply to all lands within 1000 feet of the ordinary high water level of the following public waters:

NAME OF LAKE	CLASSIFICATION	DNR PROTECTED WATERS INVENTORY ID#
Mooney	RD	27-134P
Peter	RD	27-147P
Winterhalter	NE	27-148P
Spurzem	NE	27-149P
Unnamed	NE	27-150P
School	NE	27-151W
Half Moon	NE	27-152P
Ardmore	RD	27-153P
Katrina	NE	27-154P
Unnamed	NE	27-155W
Thies	NE	27-156W
Wolsfeld	NE	27-157P
Holy Name	RD	27-158P
Independence	RD	27-176P

NE - Natural Environment Lake
RD - Recreational Development Lake

(b) The regulations of the shoreland overlay district shall apply to all lands within 300 feet of the following tributary streams:

NAME OF TRIBUTARY STREAM	FROM	TO
County Ditch No. 16	Unnamed Basin 27-494W	City limits in Section 4
Unnamed Tributary	Unnamed Basin 27-495W	Thomas Lake 27-501W
Unnamed Tributary	Highway 55 in NE 1/4 of Section 6	City limits in SW 1/4 of Section 6
Unnamed Tributary	Unnamed Basin 27-150P	City limits in Section 27
Unnamed Tributary	Holy Name Lake 27-158P	City limits in Section 26
Elm Creek	Unnamed Basin 27-481W	City limits in Section 12
Unnamed Tributary	Lake Medina 27-146P	Elm Creek in Section 11
Unnamed Tributary	Pioneer Trail in the NE 1/4 of the SW 1/4 of Section 10	Lake Medina 27-146P

Section 827.04. Permitted and Conditional Uses. Within the shoreland overlay district, no structure or land shall be used except for one or more of the uses allowed in the underlying zoning district. In addition, boathouses may be allowed within residential districts as conditional uses provided they are not designed or used for human habitation, do not contain sanitary facilities, are set back a minimum of 10 feet from the ordinary high water level and do not occupy an area greater than 250 square feet. All boathouses must be constructed or screened to reduce visibility from public waters and adjacent shorelands through the use of vegetation, topography, color or increased setbacks, assuming summer, leaf-on conditions. Boathouses located on shorelands adjacent to recreational development waterbodies may occupy an area no greater than 400 square feet, provided the width of the structure may not exceed 20 feet as measured parallel to the shoreline.

Section 827.05. Variances and Condition Uses; Notice to Commissioner.

(a) Variances from the requirements of this ordinance may only be approved in compliance with the requirements of sections 825.45 et seq. of this ordinance. Conditional use permits may be issued only pursuant to the provisions of section 825.39 et seq of this ordinance.

(b) A copy of the notice regarding any public hearing to consider a variance, conditional use permit, zoning amendment, subdivision of property or other approval authorized or required by this ordinance affecting land within the shoreland overlay district shall be sent to the commissioner. Any notice required to be sent to the commissioner shall be mailed or delivered 10 days prior to the hearing. A copy of notice to consider a subdivision of property shall include a copy of the proposed subdivision.

(c) A copy of all approved zoning amendments, subdivisions, variances and conditional use permits affecting land within the shoreland overlay district shall be sent to the commissioner within 10 days after final action or approval. When a variance has been approved despite the commissioner's recommendation of denial, the copy of the final action required by this paragraph (c) shall be accompanied by a summary of the public record and testimony regarding the matter and the findings of fact and conclusions which support the issuance of the variance.

Section 827.06. Lot Standards. In addition to the lot area, building height, lot width, and yard requirements of the underlying zoning district, all lots within the shoreland overlay district shall comply with the requirements of this section.

(a) The following standards shall be applicable to lots in the designated underlying zoning districts:

Zoning District/Public Water Designation	Lot Width at Shoreland Building Line and Ordinary High Water Level	Structure Setbacks from Ordinary High Water Level	Individual Sewage Treatment System Setback from Ordinary High Water Level
Rural Residential/ NE Lakes RD Lakes Tributary Streams	 200' 150' 100'	 150' 75' 75'	 150' 75' 75'
Suburban Residential/ NE Lakes RD Lakes Tributary Streams	 125' 75' 75'	 150' 75' 50'	 N/A N/A N/A
Urban Residential/ NE Lakes RD Lakes Tributary Streams	 125' 75' 75'	 150' 75' 50'	 N/A N/A N/A
Rural Commercial and Rural Industrial/ Tributary Streams	N/A	100'	75'
Urban Commercial and Urban Industrial/ Tributary Streams	N/A	50'	N/A

Commercial and industrial uses located on public waters which do not have water oriented needs shall be set back from the ordinary high water level twice the distance indicated above or shall be substantially screened from view from the water by topography or vegetation, assuming summer leaf-on conditions.

(b) Only land above the ordinary high water level may be used to satisfy lot area requirements. The following minimum lot area requirements shall apply:

Zoning District	Riparian Lot Area	Non-riparian Lot Area
Suburban Residential NE Lakes RD Lakes	 40,000 sq. ft. 20,000 sq. ft.	 20,000 sq. ft. 15,000 sq. ft.
Urban Residential NE Lakes RD Lakes	 40,000 sq. ft. 20,000 sq. ft.	 20,000 sq. ft. 15,000 sq. ft.

(c) The maximum lot area covered by impervious surfaces shall not exceed twenty-five (25) percent.

(d) All structures shall be constructed so that the lowest level, including the basement, is located at an elevation which is in compliance with the requirements of sections 826.75 et seq. of this ordinance or a minimum of three feet above the ordinary high water level or highest known water level, whichever is greater.

(e) No structure, road, driveway or other improvement may be constructed on a steep slope prior to evaluation by the zoning administrator of such improvement with respect to soil erosion and visibility from public waters. Individual sewage treatment systems must conform with section 720 and be placed in an area with suitable soils as defined in section 820.29 subd. 4(a) and subd. 5. The zoning administrator may require mitigative measures to prevent soil erosion or to preserve existing vegetative screening.

Section 827.07. Shoreland Alteration

Subd. 1. Alteration of vegetation or topography shall be regulated to prevent soil erosion, preserve shoreland aesthetics, preserve historic sites, prevent bank slumping, and protect fish and wildlife habitat. Vegetation alteration necessary for the construction of structures and individual sewage treatment systems or for the construction of roads and parking areas shall be exempt from the vegetation alteration standards of this subdivision. Removal or alteration of vegetation, except for agricultural and forest management uses, is allowed, subject to the following standards:

(a) Intensive vegetation clearing within the shore impact zone shall not allowed.

(b) In the shore impact zone, limited clearing of trees and shrubs and cutting, pruning, and trimming of trees shall be allowed to provide a view to the water from the principal dwelling and to accommodate the placement of permitted accessory structures or facilities, provided that:

(1) the screening of structures, vehicles, or other facilities as viewed from the water, assuming summer, leaf-on conditions, is not substantially reduced;

(2) along tributary streams, existing shading of water surfaces is preserved; and

(3) the above provisions are not applicable to the removal of trees, limbs, or branches that are dead, diseased, or pose safety hazards.

Subd. 2.

(a) Grading, filing and excavation necessary for the construction of structures, individual sewage treatment systems, roads, or driveways under validly issued construction permits for these facilities shall not require the issuance of a separate grading and filing permit under this ordinance but shall be accomplished in accordance with the provisions of section 828.63 of this ordinance.

(b) Filing or grading of wetlands shall be permitted only in compliance with applicable state law.

Subd. 3. Roads and Parking Areas. Road and parking areas shall be located to retard the runoff of surface waters and nutrients in accordance with the following criteria:

(a) Where feasible, all roads and parking areas shall meet the building setback requirements of this ordinance;

(b) In no instance shall a road or parking area be placed closer than 50 feet from the ordinary high water level or within the shore impact zone, whichever is more restrictive; and

(c) Natural vegetation or other natural materials shall be used to screen roads and parking areas when viewed from public waters.

Subd. 4. Stormwater Management.

(a) When possible, existing natural drainageways, wetlands, and vegetated soil surfaces shall be used to convey, store, filter, and retain stormwater runoff before discharge to public waters wetlands and public waters that are designated on the protected waters inventory maps prepared under Minnesota Statutes, Section 103G.201. Development shall be planned and constructed in a manner which will minimize the extent of disturbed areas, runoff velocities, erosion potential, and reduce and delay runoff volumes. Disturbed areas shall be stabilized and protected as soon as possible and facilities or methods shall be used to retain sediment on the site.

(b) When development density, topographic features, and soil and vegetation conditions are not sufficient to handle stormwater runoff adequately using natural features and vegetation, various types of constructed facilities such as diversions, settling basins, skimming devices, dikes, waterways, and ponds may be used.

Subd. 5. Agriculture and Excavation Standards.

(a) Agricultural uses shall be permitted if steep slopes and shore impact zones are maintained in permanent vegetation. The shore impact zone for parcels with permitted agricultural uses shall be the area within a line parallel to and 50 feet from the ordinary high water level.

(b) A mining and excavation uses shall be conducted in accordance with the requirements of sections 828.59 and 828.63 of this ordinance. Processing machinery shall be located consistent with setback standards for structures from ordinary high water levels of public waters.

SANITARY LANDFILL ZONING DISTRICT (SL)

Section 827.09. Sanitary Landfill - Purpose. The Sanitary Landfill (SL) District is an area exclusively established to accommodate the use of land for the development and operation of sanitary landfills. Since this type of land use is so unique to the ecological setting of Medina and the provision of public services such as transportation so demanding, a special district delineation is called for. Within any district zoned SL in Medina, an extensive set of performance standards must be met through the application of a conditional use permit.

Section 827.11. Conditional Use - Sanitary Landfills. Within the Sanitary Landfill District, no landfill shall be established or operated without a Conditional Use Permit. Said Conditional Use Permit shall be valid for a one year period, after which a permit renewal shall be required. The City Council may also require a performance bond, cash escrow, or letter of credit from the landowner or operator, to guarantee conformance with these regulations.

Section 827.13. Information Required. The following information shall be provided by the persons requesting the permit:

Subd. 1. Name and address of person requesting the permit.

Subd. 2. The exact legal property description and acreage of area to be used.

Subd. 3. The following maps of the entire site and to include all areas within five hundred (500) feet of the site. All maps shall be drawn at a scale of one (1) inch to one hundred (100) feet unless otherwise stated below:

(a) Map A -

Existing conditions to include:

Contour lines at five (5) foot intervals.
Existing vegetation.
Existing drainage and permanent water areas.
Existing structures.
Existing wells.
Existing roadways and easements.

(b) Map B -

Proposed operations to include:

Structures to be erected.
Location of earthwork and fill operation to be mined showing depth of proposed excavation.
Location of refuse disposal deposits showing maximum height of deposits.
Location of machinery to be used in the mining operation.
Location of storage of mined materials, showing height of storage deposits.
Location of vehicle parking.
Location of storage of explosives.
Erosion and sediment control structures.
Location of proposed roadways and easements.
Type and capacity of equipment to be used.

(c) Map C -

End use plan to include:

Final grade of proposed site showing elevations and contour lines at five (5) foot intervals.
Location and species of vegetation to be replanted.
Location and nature of any structures to be erected in relation to the end use plan.

Subd. 4. A soil erosion and sediment control plan.

Subd. 5. A plan for dust and noise control.

Subd. 6. A full and adequate description of all phases of the proposed operation to include an estimate of duration of the operation.

Subd. 7. A plan for fire nuisance and vermin control.

Subd. 8. Any other information requested by the Planning Commission or City Council

Subd. 9. Estimated daily or weekly volume of garbage and other waste.

Subd. 10. A plan or the submittal of assurances to the City from private or public sources satisfactorily addressing the issue of long term liability after landfill closure for the monitoring and protection of environmental quality.

Subd. 11. A plan or submittal of assurances to the City from private or public sources satisfactorily addressing the issue of long term roadway maintenance during the operations tenure on those routes providing primary landfill site access.

Section 827.15. Renewal of Permits. All property owners and residents with one thousand (1000) feet of the operation shall be notified of the annual conditional permit renewal request.

Section 827.17. Use Restriction. The following regulations shall be observed by any person to whom a permit is issued by the City for the operation of a sanitary landfill. These regulations shall govern the operation of all City approved sanitary landfills and any failure to observe these regulations shall be sufficient grounds for the revocation of the permit by the Council.

Subd. 1. All garbage and other refuse accepted by the landfill permit holder shall be thoroughly compacted by equipment of a size and weight capable of producing a downward or ground pressure of at least five (5) pounds per square inch. Such equipment shall have sufficient weight and capacity to carry out all necessary operations to the satisfaction of the enforcement officer. Sufficient auxiliary equipment shall be maintained on the site or otherwise available to permit operation in case of a breakdown.

Subd. 2. Mixed refuse material shall be spread out on the working face of the landfill so that the depth does not exceed a maximum depth of two (2') feet prior to its compaction.

Subd. 3. The areas shall be continually policed to prevent fire and the blowing of papers; shall be neat and sanitary at all times, and shall be covered at the end of each day's operation, as well as when wind conditions warrant it through the day, with sufficient material to prevent blowing papers and unsightly conditions. The size of the active face on which refuse is being currently deposited shall be kept to a minimum.

Subd. 4. Cover material will consist of earth, loam, clay, sand or a mixture of at least fifty percent (50%) earth and other inert materials, such as ashes, cinders or gravel. A minimum depth of twelve inches (12") of compacted cover and final spread cover material shall be kept on all inactive faces of the landfill at all times. The active faces of the landfills should be covered at the end of each day's operation, or as otherwise directed by the Administrator.

Subd. 5. When the landfill has been brought up to two feet (2') below the desired finished grade, it shall be covered with at least twenty-four inches (24") of compacted cover material graded and seeded in such a manner as to prevent erosion.

Subd. 6. Where the "trench system" of sanitary landfill is used, successive parallel trenches must be at least two feet (2') apart.

Subd. 7. All garbage and refuse material existing on the site at the time the permit is issued either in the form of an open dump or any other form, shall be collected, compacted, and covered with cover material at least one foot (1') in depth if below the desired finished grade, or with inert material at least two feet (2') in depth at the finished grade. This cover operation shall be completed within fifteen (15) working days after the issuance of a special permit for the sanitary landfill.

Subd. 8. The permittee or operator shall erect such temporary or permanent fences or take other measures as may be necessary to reasonably control blowing of paper and other materials from the landfill.

Subd. 9. Any material salvaged from the landfill must be handled and stored in such a manner as to prevent rodent harborage and permit proper operation of the landfill. Such salvaged material must be removed to a location at least two hundred feet (200') from the working surface so as not to interfere with the compacting and covering. All salvaged material must be completely removed from the site every twenty-four (24) hours unless provision is made for temporary storage within an enclosed, roofed and rodent-proof structure approved by the Administrator.

Subd. 10. Burning of any materials deposited in a landfill is expressly prohibited.

Subd. 11. Adequate fire fighting equipment shall be available at all times on the site or the operator shall furnish the Inspector with proof of a fire fighting agreement between the operator and the local fire district.

Subd. 12. No fill shall be placed in streambeds or other areas where streams would be obstructed or where erosion by the stream would remove cover material. There shall be no seepage or drainage of any material from the fill of such a nature as would constitute an odor nuisance, or health hazard, or pollute any water course.

Subd. 13. The permit holder shall provide an access road, approved by the Administrator that is passable in all types of weather conditions to the dumping site.

Subd. 14. The license holder shall also provide an auxiliary fill site available and ready for use during periods of heavy rain or snowfall, and when the area being filled and covered may not be reached because of said weather conditions. The permit holder shall also take precautions to eliminate excess dust in dry weather.

Subd. 15. Insects and rodents on the site shall be controlled and exterminated as directed by the Inspector.

Subd. 16. The permit holder shall cease operations and close the landfill between the hours of seven o'clock (7:00) p.m. and six o'clock (6:00) a.m. and on Sundays and holidays.

Subd. 17. All those provisions of Section 735, Mining and Land Rehabilitation, shall be followed in the development, operation and restoration of a sanitary landfill use.

Section 827.19. Total Area Limitation. Notwithstanding anything to the contrary contained in this Section, no permit shall be issued and no rezoning applications shall be approved for the construction or operation of sanitary landfills or the expansion or modification of such facilities if the amount of land comprising the proposed, expanded or modified landfill when added to land comprising all other existing and closed landfills, whether or not operated under permit from the City, shall exceed one hundred ninety (190) acres. In calculating the amount of land in such landfills, all of the following shall be included:

Subd. 1. All land which has actually been used for sanitary landfill purposes whether or not zoned for such use, and

Subd. 2. All land either currently or previously zoned sanitary landfill (SL) including all wetlands, buffer acres, setback acres, internal roads and any other land in SL zones but not actually used for the placement of refuse.

Section 827.20. Fees. Pursuant to Minn. Stat., Section 115A.921, the permit holder shall pay quarterly to the city a fee of fifteen (15) cents per cubic yard or equivalent weight of solid waste accepted and disposed of on the landfill site. The revenue derived from the fee shall be placed in the general fund for purposes of mitigating and compensating the city for the risks, costs, and other adverse affects of the sanitary landfill. Waste residue from energy and resource recovery facilities at which solid waste is processed for the purpose of extracting, reducing, converting to energy, or otherwise separating and preparing solid waste for reuse shall be exempt from one-half of the fee if there is at least an 85 percent volume reduction in the solid waste processed. Before any fee is reduced the verification procedures of Minn. Stat., Section 473.843, Subdivision 1, paragraph (c) must be followed and submitted to the Zoning Administrator. For the purposes of this section, six hundred (600) pounds of solid waste shall be considered the equivalent of one cubic yard.

Section 827.21. Time Limitation. No rezoning shall be approved and no conditional use permit for sanitary landfill shall be granted for a period exceeding twelve (12) years. At the expiration of said period the zoning on the sanitary landfill site shall revert to its previous zoning classification or such other zoning classifications as may be determined by the City Council in the manner provided in this Code for rezoning of land. The applicant shall agree to the limitations provided in this section 827.21 by contract duly executed by authorized representatives of the applicant in a form satisfactory to the City Council.

Section 827.23. Severability. Paragraphs, sentences, clauses and phrases of Sections 827.09 through 827.23 inclusive are severable, and if any phrase, clause, sentence, paragraph or section of this section shall be declared invalid, unenforceable or unconstitutional by the valid judgment or decree of a court of competent jurisdiction, such invalidity, unenforceability or unconstitutionality shall not effect any of the remaining phrases, clauses, sentences, paragraphs or sections.

PLANNED UNIT DEVELOPMENT DISTRICT (PUD)

Section 827.25. PUD - Planned Unit Development Regulations - Purpose. PUD - Planned Unit Development provisions are established to provide comprehensive procedures and standards designed to allow greater flexibility in the development of neighborhoods and/or nonresidential areas by incorporating design modifications and allowing for a mixture of uses. The PUD process, by allowing deviation from the strict provisions of this Code related to setbacks, lot area, width and depth, yards, and other development standards is intended to encourage:

Subd. 1. Innovations in development to the end that the growing demands for all styles of economic expansion may be met by greater variety in type, design, and placement of structures and by the conservation and more efficient use of land in such developments.

Subd. 2. Higher standards of site and building design.

Subd. 3. The preservation, enhancement, or restoration of desirable site characteristics such as high quality natural resources, wooded areas, wetlands, natural topography and geologic features and the prevention of soil erosion.

Subd. 4. Innovative approaches to stormwater management and low-impact development practices which result in volume control and improvement to water quality beyond the standard requirements of the City.

Subd. 5. Maintenance of open space in portions of the development site, preferably linked to surrounding open space areas, and also enhanced buffering from adjacent roadways and lower intensity uses.

Subd. 6. A creative use of land and related physical development which allows a phased and orderly development and use pattern and more convenience in location and design of development and service facilities.

Subd. 7. An efficient use of land resulting in smaller networks of utilities and streets thereby lower development costs and public investments.

Subd. 8. A development pattern that effectuates the objectives of the Medina Comprehensive Plan. (PUD is not intended as a means to vary applicable planning and zoning principles.)

Subd. 9. A more desirable and creative environment than might be possible through the strict application on zoning and subdivision regulations of the City.

Section 827.27. Requirements, Conditions and Standards for Approving a PUD.

Subd. 1. General Standards.

(a) Rezoning Required. Approval of a PUD under this Section shall require the subject property to be rezoned from its existing designation to a PUD.

(b) Review of Application. In its review of any application under this Section, the City Council shall consider comments on the application of those persons appearing

before the Council, the report and recommendations of the Planning Commission, and any staff report on the application. The Council also shall evaluate the effects of the proposed project upon the health, safety and welfare of residents of the community and the surrounding area and shall evaluate the project's conformance with the overall intent and purpose of this Section. If the Council determines that the proposed project will not be detrimental to the health, safety and welfare of residents of the community and the surrounding area and that the project does conform with the overall intent and purpose of this Section, it may approve a PUD.

(c) Ownership. An application for a PUD Zoning District approval must be filed by the land owner or jointly by all land owners of the property included in a project. The application and all submissions must be directed to the development of the property as a unified whole. In the case of multiple ownership, the approved PUD shall be binding on all owners.

(d) Qualifications of an Applicant**.** Any application under this Section shall be made only by the fee owner of the property covered in the application or by the owner's duly authorized representative, provided, however, that an option holder or a contract for deed holder may submit such an application if it is accompanied by a fully executed agreement or document from the owner stating that the owner has no objections to the proposed project and the owner is, in fact, joining in said application.

(e) Comprehensive Plan Consistency. The proposed PUD shall be consistent with the City Comprehensive Plan.

(f) Potentially allowed uses. All permitted, conditional, and accessory uses described in the various zoning districts of the City shall be considered potentially allowed uses within a PUD.

(g) Common Open Space. Common private or public open space and facilities at least sufficient to meet the minimum requirements established in the Comprehensive Plan and such complementary structures and improvements as are necessary and appropriate for the benefit and enjoyment of the residents of the PUD shall be provided within the area of the PUD development.

(h) Density.

(1) The maximum allowable density in a PUD Zoning District shall be determined by standards negotiated and agreed upon between the applicant and the City. In all cases, the negotiated standards shall be consistent with the development policies as contained in the Medina Comprehensive Plan.

(2) Whenever any residential PUD is to be developed in stages, the City may, at its discretion, place limitations on the extent to which the density of each stage deviates from average density of the entire PUD.

(i) More than one principal building may be constructed on each platted lot within a PUD.

(j) A PUD which involves only one land use or housing type may be allowed, provided that it is otherwise consistent with the stated purposes and objectives of this section.

(k) The uniqueness of each PUD requires that specifications and standards for streets, utilities, public facilities and the approval of land subdivisions may be subject to modifications from the City ordinances generally governing them. The City Council may therefore approve streets, utilities, public facilities and land subdivisions which are not in compliance with usual specifications or ordinance requirements where it is found that such are not required in the interests of the City.

(l) Utilities. In any PUD, all utilities, including electricity, natural gas and communication shall be installed underground.

(m) Private Utilities.

(1) Septic Systems. All requirements of Section 720 of this Code shall be followed within a PUD.

(2) Wells. All well location plans shall be approved by the City.

(n) Roadways. All streets shall conform to the design standards contained in the Medina Subdivision Regulations unless otherwise approved by the City Council.

(o) Landscaping. In any PUD, landscaping shall be provided according to a plan approved by the City Council, which shall include a detailed planting list with sizes and species indicated as part of the Final Plan. In assessing the landscaping plan, the City Council shall consider the natural features of the particular site, the architectural characteristics of the proposed structure and the overall scheme of the PUD.

(p) Setbacks. The front, rear and side yard restrictions on the periphery of the PUD site at a minimum shall be the same as imposed in the respective or applicable zoning district.

(q) Height. The maximum building height shall comply with the height standards specified within the comparable zoning district, unless otherwise approved by the City Council.

Section 827.29. Residential Standards.

Subd. 1. Purpose. The purpose of this Section is to establish standards for single family, multiple family, institutional and other residential PUD projects, in addition to those standards contained elsewhere in this Code for all PUD projects. All residential PUD projects shall be developed in accordance with the following residential area standards:

(a) There shall be no minimum lot or area size required for a tract of land for which a PUD Zoning District is proposed.

(b) There shall be no minimum frontage on a public street required for a tract of land for which a PUD is proposed.

(c)It is the City's policy to discourage private roadways within a residential PUD. Regardless if roads are private or dedicated to the public, they shall be designed to right-of-way widths and constructed to standards imposed by the Medina Subdivision Regulations, unless otherwise approved by the City Council.

(d) The normal standards of existing residential zoning districts shall apply to each project, excepting those standards to be modified, as determined by the City Council.

(e) In addition to the above standards, the City Council may impose such other standards for a residential PUD as are reasonable and as the Council deems are necessary to protect and promote the general health, safety and welfare of the community and the surrounding area.

Section 827.31. Non-Residential Project Standards.

Subd. 1. Purpose. The purpose of this Section is to establish standards for non-residential PUD projects, in addition to those standards contained elsewhere in this Code for all PUD projects. All non-residential PUD projects shall be developed in accordance with the following area standards:

(a) There shall be no minimum lot or area size required for a tract of land for which a PUD is proposed.

(b) There shall be no minimum frontage on a public street required for a tract of land for which a PUD is proposed.

(c) Off-street parking and loading facilities for a non-residential PUD shall be provided in accordance with Section 828, Zoning-Performance Standards and Enforcement of the Medina City Code, unless otherwise approved by the City Council.

(d) The normal standards of existing non-residential zoning classifications shall apply to each project, excepting those standards to be modified, as determined by the City Council.

(e) In addition to the above standards, the City Council may impose such other standards for a nonresidential PUD as are reasonable and as the Council deems are necessary to protect and promote the general health, safety and welfare of the community and the surrounding area.

Section 827.33. Concept Plan.

Subd. 1. Application Procedure.

(a) As the first step in the review procedure for a PUD, an applicant shall complete and submit to the City an application for Concept Plan review, together with a fee as determined by City ordinance. The applicant shall submit with the application such information as is required by this ordinance and such other information as deemed necessary by the City to explain the general intent of the application. Comments and actions by the City during review of the Concept Plan are purely advisory and shall in no way shall bind the City to subsequent approval of a General Plan of Development, nor imply any future approval.

(b) Once an application for Concept Plan review is complete, the Zoning Administrator shall refer it to the Planning Commission for a public hearing. Notice of such public hearing shall be published in the official newspaper at least 10 days in advance of the hearing. For land located in the RR, RR-1, RR-2 or RR-UR zoning districts, notice of the hearing shall also be mailed to owners of property located within 1000 feet of the subject property. For land located in any other zoning district, notice of the hearing shall also be mailed to owners of property located within 350 feet of the subject property.

Subd. 2. **Information Required.** The Concept Plan submitted for a PUD shall include the following information:

(a) General Information.

(1) The name and address of the landowner(s) and their interest in the subject property.

(2) The applicant's name and address, if different from the landowner.

(3) The names and addresses of all professional consultants who have contributed to the development of the PUD being submitted, including attorney, land planner, engineer and surveyor.

(4) Evidence that applicant has sufficient control over the subject property to effectuate the proposed PUD including a statement of all legal, beneficial, tenancy and contractual interests held in or affecting the subject property and including an abstract, commitment for title insurance, or registered property abstract, and such other evidence as the City Attorney may require to show the status of title or control of the subject property.

(b) Present Status.

(1) Address and legal description of subject property.

(2) Existing zoning classification and present use of subject property and all lands within 1,000 feet of subject property.

(3) A map depicting existing development of subject property and all land within 1,000 feet thereof and locations of existing streets, property lines, easements,

water mains, wells, storm, sanitary and septic sewer systems, with invert elevations on and within 100 feet of subject property.

(c) A written statement generally describing the proposed PUD and the market which it is intended to serve and the market demand. The statement is also to demonstrate the proposed PUD's relationship to Medina's Comprehensive Plan and how the proposed PUD is to be designed, arranged and operated in order to permit the development and use of neighboring property in accordance with the applicable regulations of the City.

(d) Site Conditions. Graphic reproductions of the existing site conditions at a scale acceptable to the Zoning Administrator, which includes the following:

(1) Contours - minimum two foot intervals.

(2) Location, type and extent of tree cover and vegetation.

(3) Slope analysis.

(4) Location and extent of water bodies, streams, floodplains and approximate location of wetlands on and within 300 feet of the subject property.

(5) Significant rock outcroppings.

(6) Existing drainage patterns.

(7) Vistas and significant views.

(8) Soil conditions as they affect development.

All of the graphics should be the same scale to allow cross reference. The use of overlays is recommended for clear reference.

(e) Schematic drawings of the proposed development concept including, but not limited to, the general location of major circulation elements, public and private open space, buildings, structures, and other land uses, and buffering and screening.

(f) A statement of the estimated total number of dwelling units or square feet of developed land use activities proposed for the PUD and a tabulation of the proposed approximate allocations of land use expressed in acres and as a percent of the total project area, which shall include at least the following as applicable:

(1) Area devoted to residential uses.

(2) Area devoted to residential use by building type.

(3) Approximate site area and floor area devoted to commercial, industrial, or institutional uses.

(4) Area devoted to private open space.

(5) Area devoted to public open space.

(6) Approximate area devoted to streets.

(7) Approximate area devoted to and number of off street parking and loading spaces and related access.

(g) When the PUD is to be constructed in stages during a period of time extending beyond a single construction season, a schedule for the development of such stages or units shall be submitted stating the approximate beginning and completion date for each such stage or unit and the proportion of the total PUD public or common open space and structures/units to be provided or constructed during each such stage and the overall chronology of development to be followed from stage to stage.

(h) When the proposed PUD includes provisions for public or private open space or service facilities, a statement describing the provision that is to be made for the care and maintenance of such open space or service facilities.

(i) General intents of any restrictive covenants that are to be recorded with respect to property included in the proposed PUD.

(j) Schematic utilities plans indicating placement of water, wells, sanitary sewer, septic and storm sewers.

(k) Mailing labels of current owners of the property necessary for public hearing, obtained from Hennepin County property records.

(l) The Zoning Administrator, Planning Commission and/or City Council may excuse an applicant from submitting any specific item of information or document required in this stage, which it finds to be unnecessary to the consideration of the specific proposal.

(m) The Zoning Administrator, Planning Commission, and/or City Council may require the submission of any additional information or documentation which it may find necessary or appropriate to full consideration of the proposed PUD or any aspect or stage thereof.

Subd. 3. Action by the Planning Commission.

(a) The Planning Commission shall hold the public hearing on an application for Concept Plan review following appropriate legal notice as outlined above. The applicant and/or a representative shall appear before the Planning Commission at this hearing to answer questions regarding the proposed

project.

(b) Within 60 days following the public hearing on any such application, the Planning Commission shall forward a report on the application to the City Council, and it shall offer such comments or suggestions as it deems appropriate. If no action on an application is taken by the Planning Commission within 60 days, and there has been no delay caused or requested by the applicant, the application shall be forwarded to the City Council without comment.

(c) Within the permitted period of time while an application is under consideration by the Planning Commission, an applicant shall be allowed to make such amendments to the proposal as are requested by the City staff or the Planning Commission or as the applicant may desire to effect. An applicant may request a delay in the proceedings before the Planning Commission in order to modify or amend the proposal.

Subd. 4. Action by the City Council.

(a) Once an application under this Code has been forwarded to the City Council, the applicant shall present the proposal before the Council. The City Council, at its discretion, may take additional testimony on the PUD.

(b) The City Council shall review the application as originally submitted or as amended, and shall provide such comments and suggestions as it deems appropriate.

Section 827.35. General Plan of Development.

Subd. 1. Following review of a Concept Plan as described above, an applicant shall submit to the City a General Plan of Development for the proposed project as required herein, together with a fee as determined by ordinance.

Subd. 2. A General Plan of Development for the proposed project shall be submitted to the City within 180 days of review of the Concept Plan by the City Council. If a General Plan of Development is not submitted by this deadline, the applicant shall be required to resubmit a Concept Plan for review by the Planning Commission and City Council unless, , prior to the expiration, the applicant requests an extension of time in writing and the City Council grants the request for good cause. Any extension so granted may be subject to conditions for such period of time not exceeding 180 days, or such other period as the City Council deems appropriate.

Subd. 3. The General Plan of Development stage submissions should depict and outline the proposed implementations of the Concept Plan for the PUD. Information from the Concept Plan may be included for background and to provide a basis for the submitted plan. The General Plan of Development stage submissions shall include but not be limited to:

(a) Present zoning classification, comparable zoning classification describing development

standards which will apply unless modified by the City Council, and a description of the modifications requested from the standards of the comparable zoning district.. Any other public decisions necessary for implementation of the proposed plan shall also be described.

(b) A preliminary plat prepared in accordance with the Medina Subdivision Regulations, if applicable. For PUDs which will be platted in multiple phases, the General Plan of Development shall include a plan identifying the proposed configuration and dimensions of lots which will be platted during all phases of the PUD.

(c) Preliminary plans, drawn to scale acceptable to the Zoning Administrator, containing at least the following information:

(1) Proposed name of the development (which shall not duplicate nor be similar in pronunciation the name of any plat theretofore recorded in the County).

(2) Property boundary lines and dimensions of the property and any significant topographical or physical features of the property.

(3) The location, size, use and arrangement, including height in stories and feet and total square feet of ground area coverage and floor area, of proposed buildings, including model homes, and existing buildings which will remain, if any. Also all required setback lines shall be depicted.

(4) Location, dimensions of all driveways, entrances, curb cuts, parking stalls, loading spaces and access aisles, and all other circulation elements including bike and pedestrian; and the total site coverage of all circulation elements.

(5) Location, designation and total area of all common private open space and facilities.

(6) Location, designation and total area proposed to be conveyed or dedicated for public open space, including parks, playgrounds, school sites and recreational facilities.

(7) Location and design of all street improvements and utilities.

(8) The location, use and size of structures and other land uses on adjacent properties.

(9) A detailed, drawn to scale, landscape plan including trails and recreational areas with planting specifications showing the areas to be sodded and the location, size and species of all trees and shrubbery to be planted and those to be preserved.

(10) A survey showing all existing significant trees as required by the Tree Preservation ordinance.

(11) General grading and drainage plans for the developed PUD.

(12) A detailed plan illuminating size, location and structural specifications for exterior signing and lighting.

(13) Any other information that may have been required by the City staff, Planning Commission or City Council in conjunction with the review of the Concept Plan.

(d) An accurate legal description of the entire area within the PUD for which General Plan of Development approval is sought.

(e) Where applicable, a tabulation indicating the number of residential dwellings units and expected population.

(f) Where applicable, a tabulation indicating the gross square footage, if any, of commercial and industrial floor space by type of activity (e.g. drug store, dry cleaning, supermarket).

(g) Preliminary architectural "typical" plans indicating use, floor plan, elevations and exterior wall finishes of proposed building, including model homes.

(h) A traffic flow plan and analysis.

(i) Solid waste disposal procedures and provisions.

(j) Preliminary grading and site alteration plan illustrating changes to existing topography and natural site vegetation.

(k) A statement summarizing all changes, which have been made in any document, plan data or information previously submitted, together with revised copies of such document, plan or data.

(l) Such other and further information as the City staff, Planning Commission, or Council shall find necessary to a full consideration of the entire proposed PUD or any stage thereof.

(m) The Zoning Administrator, Planning Commission, and/or City Council may excuse an applicant from submitting any specific item of information or document required in this Section which it finds to be unnecessary to the consideration of the specific proposal for PUD approval.

Subd. 4. Once an application for a General Plan of Development is complete, the Zoning Administrator shall refer it to the Planning Commission for a public hearing. The same notification procedure for this hearing shall be followed as was followed with respect to the applicant's Concept Plan, outlined in Section 827.33.

(a) Action by the Planning Commission.

(1) The Planning Commission shall hold the public hearing on an application following appropriate legal notice as outlined above. The applicant and/or a representative shall appear before the Planning Commission at this hearing to answer questions regarding the proposed project.

(2) Within 60 days following the public hearing on any such application, the Planning Commission shall forward a report on the application to the City Council, and it shall recommend approval of the application as submitted, approval of the application subject to certain modifications or conditions therein, or denial of the application. If no action on an application is taken by the Planning Commission within 60 days, and there has been no delay caused or requested by the applicant, the application shall be forwarded to the City Council without recommendation.

(3) Within the permitted period of time while an application is under consideration by the Planning Commission, an applicant shall be allowed to make such amendments to the proposal as are requested by the City staff or the Planning Commission or as the applicant may desire to effect. An applicant may request a delay in the proceedings before the Planning Commission in order to modify or amend the proposal.

(b) Action by the City Council.

(1) Once an application under this Code has been forwarded to the City Council the applicant shall present the proposal before the Council. The City Council, at its discretion, may take additional testimony on the PUD.

(2) The City Council shall base its actions upon the following criteria:

(i) Compatibility of the plan with the standards, purposes and intent of this section;

(ii) Consistency of the plan with the goals and policies of the Comprehensive Plan;

(iii) The impact of the plan on the neighborhood in which it is to be located; and

(iv) The adequacy of internal site organization, uses, densities, circulation, parking facilities, public facilities, recreational areas, open spaces,

and buffering and landscaping.

(3) The City Council shall approve the application as originally submitted or as amended, shall approve the application with certain modifications or conditions therein, shall deny the application, shall request amendment of the application, or shall refer the application back to the Planning Commission for further review. If this matter is referred back to the Planning Commission, the Council also shall indicate the controlling standards to be used in further evaluation and planning of the project.

Section 827.37. Issuance of Permits. No permits for construction on the project site shall be issued unless consistent with the approved General Plan of Development and shall not be issued unless:

Subd. 1. The plat, if applicable, has been recorded and all other relevant land use approvals have been granted.

Subd. 2. A development agreement acceptable to the City has been recorded against the subject property, as well as all easements, restrictive covenants, and other required documents.

Subd. 3. Financial guarantees in an amount and form acceptable to the City have been received.

Subd. 4. All other terms and conditions of General Plan of Development have been met.

Section 827.39. PUD Evaluation. If periodic review of a PUD is included as a condition to the approval of a PUD, such a project shall be reviewed by the City Council. The City Council, at its discretion, may take additional testimony on the PUD and attach any additional terms and conditions to the PUD.

Section 827.41. Amendment of a PUD.

Subd. 1. Application Procedures. As determined by the Zoning Administrator, any substantial deviation or modification from the terms or conditions of an approved PUD or any alteration in a project for which a PUD has been approved shall require an amendment of the original PUD. An application for amendment of the original PUD specifying the proposed alteration shall be submitted to the City, together with a fee established by ordinance and such information as is required by the City or as the applicant deems necessary to fully explain the application. Should the applicant request an amendment of a PUD to erect an additional building or buildings, the fee therefor shall be established by ordinance.

Subd. 2. Action by the Planning Commission and City Council. The same review procedure by the Planning Commission and City Council shall be followed for an amendment of a PUD as was followed with respect to the applicant's General Plan of Development.

Section 827.43. General Requirements.

Subd. 1. Records. The Zoning Administrator shall maintain a record of all PUDs issued by the City, including information on a project's allowed uses, all pertinent project plans, any conditions imposed on a project by the City Council, and such other information as the Zoning Administrator may deem appropriate.

Subd. 2. **Cancellation of a PUD.** Physical implementation of any approved PUD must begin within one year following City Council approval of the PUD for that project, unless in granting a PUD, the Council shall specify a different period of time for project implementation. The City Council may rezone the subject property upon failure to initiate project implementation within the appropriate time period unless an extension of said PUD is approved by the Council. An existing PUD also shall be cancelled if any rezoning or other action by the City shall occur which supersedes the PUD.

Subd. 3. **Conveyance of Property Within a PUD.** In the event that any real property within an approved PUD is conveyed in total or in part, the buyer(s) thereof shall be bound by all provisions of the PUD and the General Plan of Development for that project.

Subd. 4. **Compliance with Overall Plan.** The Zoning Administrator shall review all permits issued and construction undertaken and compare actual development with the approved development schedule. If the Zoning Administrator finds that development is not proceeding in accordance with the approved schedule, or if there are minor deviations from the approved plan, he/she shall immediately notify the applicant to correct the situation or accept the changes if they do not substantially alter the intent of the City Council approval. If the deviations are substantial and change the intent of the approval, the Zoning Administrator shall immediately notify the Council. The Council shall take such steps as it shall deem necessary to compel compliance with the approved plan, require the land owner or applicant to seek an amended General Plan of Development, or may rezone the land.

CONSERVATION DESIGN DISTRICT (CD)

Section 827.51. Conservation Design (CD) – Purpose.
The purpose of this district is to preserve the City's ecological resources, wildlife corridors, scenic views, and rural character while allowing residential development consistent with the goals and objectives of the City's Comprehensive Plan and Open Space Report as updated from time to time. The specific conservation objectives of this district are to:

1. Protect the ecological function of native hardwood forests, lakes, streams, and wetlands.

2. Protect moderate to high quality ecologically significant natural areas.

3. Protect opportunities to make ecological connections between parks and other protected lands and ecologically significant natural areas.

4. Protect important viewsheds including scenic road segments.

5. Create public and private trails for citizens to access and enjoy Open Space resources.

6. Create public and private Open Space for citizens to access and enjoy Open Space resources.

Section 827.53 Applicability.

Subd. 1. Conservation design is an option that a property owner is encouraged to consider as an alternative to Conventional Development, as defined herein. The City will give heightened consideration to such requests where the opportunities to achieve conservation objectives are significantly higher than that available through conventional development. Conservation design may be considered on qualifying parcels lying in the Rural Residential District and all sewered residential districts.

Section 827.55 Intent.

Subd. 1. It is the intent of the City to accomplish the stated purpose of this District by approving a Planned Unit Development. In exchange for achieving the conservation objectives, it is the intent of the City to provide density and design flexibility and to encourage development review through a Collaborative Process.

Subd. 2. The permitted, conditional and accessory uses and other regulations set forth in the existing zoning districts shall apply unless specifically addressed in this District, the PUD District, or if determined by the City Council to be inconsistent with the purpose and intent of this District as part of the final PUD documents.

Subd. 3. The procedures and regulations set forth in the PUD District shall apply unless specifically addressed in this District. If a final PUD plan is approved by the City, the subject property shall be rezoned to Conservation Design-PUD District (CD-PUD). The permitted uses and all other regulations governing uses on the subject land shall then be those found in the CD-PUD zoning district and documented by the PUD plans and agreements. The following subsections are requirements for all CD-PUDs unless exceptions, as part of a PUD, are otherwise approved by the City Council.

Section 827.57. Definitions.

Subd. 1. Base Density. The maximum number of units or lots that are allowed on a parcel in accordance with the standards of the existing zoning district and the Zoning and Subdivision Codes.

Subd. 2. Buildable Land Area. The total land area in a proposed Conservation Design Subdivision less the amount of land that includes: slopes greater than 18%, wetlands, required wetland buffers, lakes, and land contained within the 100 year floodplain.

Subd. 3. Collaborative Process. A development review process that results in a development plan in which clearly defined conservation objectives are achieved in exchange for greater flexibility from the requirements of the base zoning district and the Zoning and Subdivision Codes.

Subd. 4. Conventional Development. Development that meets the standard minimum requirements of the City's ordinances regulating development.

Subd. 5. Conservation Easement. As defined in Minnesota Statutes, Chapter 84C: A nonpossessory interest of a holder in real property imposing limitations or affirmative obligations the purposes of which include retaining or protecting natural, scenic, or open-space values of real property, assuring its availability for agricultural, forest, recreational, or open-space use, protecting natural resources, maintaining or enhancing air or water quality, or preserving the historical, architectural, archaeological, or cultural aspects of real property.

Subd. 6. Conservation Design Subdivision. Any development of land that incorporates the concepts of designated Conservation Areas and clustering of dwelling units.

Subd. 7. Conservation Area. Designated land within a Conservation Design Subdivision that contributes towards achievement of one or more of the conservation objectives. A Conservation Easement is placed on Conservation Areas to permanently restrict the Conservation Area from future development. Conservation Areas may be used for preservation of ecological resources, habitat corridors, passive recreation, and for pasture, hay cropping and other low impact agricultural uses.

Subd. 8. Homeowners Association. A formally constituted non-profit association or corporation made up of the property owners and/or residents of a development for the purpose of owning, operating and maintaining common Conservation Areas and/or other commonly owned facilities and Open Space.

Subd. 9. Open Space. Land that is not designated as a Conservation Area that is used for parks, trails or other uses. Open Space may be owned and managed by the City, homeowner's association or other entity.

Subd. 10. Viewshed. The landscape or topography visible from a geographic point, especially that having aesthetic value.

Subd. 11. Yield Plan. A conceptual layout that shows the maximum number of lots that could be placed on a parcel in accordance with the standards of the existing zoning district and the Zoning and Subdivision Codes. The Yield Plan shows proposed lots, streets, rights-of-way, and other pertinent features. Yield Plans shall be drawn to scale. The layout shall be realistic and reflect a development pattern that could reasonably be expected to be implemented, taking into account the presence of wetlands, floodplains, steep slopes, and existing easements.

Section 827.59. General Performance Standards.

Subd. 1. Minimum Size of Subdivision.

(a) The minimum land area required for development shall be:

(1) 40 contiguous acres in the Rural Residential District

(2) 20 contiguous acres in sewered residential districts

(b) A subdivision in the Rural Residential District of over 20 contiguous acres but less than 40 contiguous acres may apply for approval if they meet all the requirements for CD, and the visual impact of the subdivision from existing adjacent roadways is mitigated by existing topography, existing vegetation, and/or acceptable vegetative buffers.

Subd 2. Required Conservation Area. The minimum required Conservation Area within the CD development shall be:

(a) At least 30% of the total Buildable Land Area in the Rural Residential District, or higher depending on the land and opportunities to achieve the City's conservation objectives.

(b) At least 20% of the total Buildable Land Area in sewered residential districts, or higher depending on the land and opportunities to achieve the City's conservation objectives.

Subd. 3. Designating Conservation Areas.

(a) The required amount of Conservation Area shall be designated and located to maximize achievement of the City's conservation objectives. Opportunities for achieving these objectives will vary depending on the location, size and specific qualities of the subject parcel. Each parcel will be evaluated for opportunities to achieve the following primary and secondary conservation objectives over and above that achievable under conventional development:

(1) Parcels with opportunities to achieve the following primary conservation objectives will be given higher consideration for flexibility from performance standards.

i. The protection and/or restoration of the ecological function of native hardwood forests (e.g. Maple-Basswood Forest), lakes, streams and wetlands.

ii. The protection, restoration, and/or creation of moderate to high quality ecological resources including the sensitive ecological resources identified as priority areas on the Composite Map of the Open Space Report as updated from time to time.

iii. The reservation of land connecting these aquatic and terrestrial ecological resources in order to restore and/or create new ecological resources suitable for habitat movement corridors.

(2) Parcels with opportunities to achieve the following secondary conservation objectives may be given consideration for flexibility from performance standards:

i. The protection of scenic views and viewsheds including the views from roads identified as "Scenic Roads" on the Scenic Roads Map of the Open Space Report as updated from time to time.

ii. The reservation of land for incorporating public and private trails in order to create connections to existing or planned trails as identified in the current Parks, Trails, and Open Space Plan.

iii. The reservation of land for incorporating public and /or private Open Space in order to achieve goals as identified in the Comprehensive Plan.

Subd. 4. Perimeter Setbacks. Structure setbacks from the perimeter of the subdivision shall be the same as the existing zoning district.

Section 827.60 Open Space Report Composite Map Appeal Process. In the event that an applicant is not in agreement with the Composite Map of the Open Space Report or the data contained within a report on which the Composite Map is based upon, the applicant may present an appeal to the city.

Subd. 1. The applicant shall put the appeal in writing, accompanied by the fee as described by the City's Fee Schedule, and is responsible to provide documentation supporting their appeal.

Subd. 2. The appeal shall be reviewed by city staff, with the assistance of any technical consultants which city staff shall determine are appropriate. Such consultants may include, but are not limited to, environmental engineers, wetland scientists, arborists and other similar experts. City staff shall make a determination on the appeal within sixty days of receipt of a complete appeal application.

Subd 3. The applicant may appeal city staff's decision to the city council. The appeal must be filed within thirty days of staff's determination.

Subd. 4. The applicant shall be responsible for the costs accrued by the City in review of the appeals described above, including the costs of technical consultants hired by the City.

Section 827.61. Density and Design Flexibility .
Flexibility from the requirements of the existing zoning district or other requirements of this code may be granted at the discretion of the City Council. In considering such flexibility, the City will evaluate how well the project achieves the conservation objectives over and above that achievable under conventional development and the amount and quality of conservation area protected.

Subd. 1. Additional Density.

(a) Density, in addition to the Base Density, may be granted at the discretion of the City Council. Any additional density or additional number of dwelling units shall be calculated as a percentage of Base Density. The Base Density shall be that established by regulations in the relevant existing zoning district.

(1) In the Rural Residential District, Base Density shall be determined by calculating the number of 5-acre areas of contiguous soils suitable for a standard sewage disposal system that are located on the subject property.

(2) In sewered residential districts, a Yield Plan shall be developed to determine Base Density. Regulations of the base district and all other relevant land use regulations of this Code shall be used for completing the Yield Plan.

(b) The total number of dwelling units in a CD-PUD development shall be guided by the density limitations contained in the Comprehensive Plan and may be:

(1) Up to 200% of the calculated Base Density in the Rural Residential District.

(2) Up to 120% of calculated Base Density in all sewered residential districts.

Subd. 2. Other areas of flexibility

(a) In the Rural Residential District, flexibility may include:

(1) Lot size, lot width and structure setbacks provided setbacks comply with the following minimums:

i. Setback from local streets: 35 feet.

ii. Setback from Arterial and Collector Streets: 100 feet.

iii. Interior structure setbacks: 30 feet.

(2) Housing type.

(3) Upland buffers and tree preservation regulations provided that the objectives of these regulations are met for the site as a whole.

(4) Due consideration may be given for conservation easements granted when calculating park dedication requirements.

(5) Variations to City regulations regarding septic systems.

(b) In all sewered residential districts, flexibility may include:

(1) Lot size, lot width, and structure setbacks.

(2) Housing type.

(3) Landscaping.

(4) Screening.

(5) Upland buffers and tree preservation regulations provided that the objectives of these regulations are met for the site as a whole.

(6) Buffer yard.

(7) Due consideration may be given for conservation easements granted when calculating park dedication requirements.

Section 827.63. Conservation Area Protection and Ownership.

Subd. 1. Land and improvements in areas designated as Conservation Areas in a CD-PUD shall be established, protected and owned in accordance with the following guidelines:

(a) Designated Conservation Areas shall be surveyed and subdivided as separate outlots.

(b) Designated Conservation Areas must be restricted from further development by a permanent Conservation Easement (in accordance with Minnesota Statute Chapter 84C.01-05) running with the land. The Conservation Easement must be submitted with the General Plan of Development and approved by the City Attorney.

(1) The permanent Conservation Easement may be held by any combination of the entities defined by Minnesota Statute Chapter 84C, but in no case may the holder of the Conservation Easement be the same as the owner of the underlying fee.

(2) The permanent Conservation Easement shall be recorded with Hennepin County and must specify:

i. The entity that will maintain the designated Conservation Area.

ii. The purposes of the Conservation Easement, that the easement is permanent, and the conservation values of the property.

iii. The legal description of the land under the easement.

iv. The restrictions on the use of the land and from future development.

v. To what standards the Conservation Areas will be maintained through reference to an approved land stewardship plan.

vi. Who will have access to the Conservation Area.

(3) Ownership of the underlying fee of each designated Conservation Area parcel, may be held by any combination of the following entities:

i. A common ownership association, subject to the provisions in the PUD District.

ii. An individual who will use the land in accordance with the permanent Conservation Easement.

iii. A private nonprofit organization, specializing in land conservation and stewardship, that has been designated by the Internal Revenue Service as qualifying under section 501 (c) (3) of the Internal Revenue Code.

iv. A government agency (e.g. park and/or natural resource agency or division).

v. The City of Medina, in rare situations when there are no other viable options.

(c) Open Space areas that do not achieve the City's conservation objectives may be established under a homeowner's association without protection by a Conservation Easement. Such areas shall be regulated according to provisions of the PUD District.

Section 827.65. Land Stewardship Plan.

Subd. 1. Plan Objectives. Where a CD-PUD has designated Conservation Areas, a plan for the development, long-term use, maintenance, and insurance of all Conservation Areas, may be required. The plan shall:

(a) Define ownership and methods of land protection.

(b) Establish necessary regular and periodic operation and maintenance responsibilities.

(c) Estimate staffing needs, insurance requirements, and other associated costs associated with plan implementation and define the means for funding the same on an on-going basis. This shall include land management fees necessary to fund monitoring and

management of the Conservation Easement by the easement holder. The fees shall be estimated and validated by the proposed easement holder.

(d) Meet the requirements of the future conservation easement holder.

Subd. 2. Plan Submittal Requirements. A preliminary Land Stewardship Plan shall be submitted with the General Plan of Development. A Final Land Stewardship Plan shall be submitted with the Final Plan Stage of PUD development. The plan shall contain a narrative describing:

(a) Existing conditions, including all natural, cultural, historic, and scenic elements in the landscape;

(b) Objectives for each Conservation Area, including:

(1) The proposed permanent or maintained landscape condition for each area.

(2) Any restoration measures needed to achieve the proposed permanent condition, including:

i. Measures for correcting increasingly destructive conditions, such as erosion and intrusion of invasive plant species.

ii. Measures for restoring historic features (if applicable).

iii. Measures for restoring existing or establishing new landscape types.

(3) A maintenance plan, including:

i. Activities needed to maintain the stability of the resources, including mowing and burning schedules, weed control measures, planting schedules, and clearing and cleanup measures and schedules.

ii. An estimate of the annual on-going (post restoration) operating and maintenance costs.

Subd. 3. Funding of Operation and Maintenance. At the discretion of the City, the applicant may be required to escrow sufficient funds for the maintenance and operation costs of Conservation Areas for up to four years depending on restoration measures.

Subd. 4. Enforcement. In the event that the fee holder of the Conservation Areas, common areas and facilities, or any successor organization thereto, fails to properly maintain all or any portion of the aforesaid common areas or facilities, the City in coordination with the holder of the easement, may serve written notice upon such fee holder setting forth the manner in which the fee holder has failed to maintain the aforesaid common areas and facilities. Such notice shall set forth the nature of corrections required and the time within which the corrections shall be made. Upon failure to comply within the time specified, the fee holder , or any successor organization, shall be considered in

violation of this Ordinance, in which case the City shall have the right to enter the premises and take the needed corrective actions. The costs of corrective actions by the City shall be assessed against the properties that have the right of enjoyment of the common areas and facilities.

Section 827.67. Conservation Area Design Standards.
The following Conservation Area design standards shall also be considered in designing the CD-PUD:

Subd. 1. Conservation Areas should be interconnected wherever possible to provide a continuous network of Open Space within the PUD and throughout the City. It should coordinate and maximize boundaries with Conservation Areas and Open Space on adjacent tracts.

Subd. 2. Incorporate public and private trails with connections to existing or planned regional trails as identified in the most recent Park, Trail and Open Space Plan.

Subd. 3. Designated public access trails shall be protected by an access easement owned by the City.

Subd. 4. Incorporate public and/or private Open Space as designated in the Comprehensive Plan.

Subd. 5. Views of new dwellings from exterior roads and abutting properties should be minimized by the use of existing topography, existing vegetation, or additional landscaping. Ridge and hilltops should be contained within designated Conservation Areas wherever possible. Trees should not be removed from ridges and hilltops.

Subd. 6. The boundaries of designated conservation areas shall be clearly delineated and labeled on CD-PUD plans. These areas shall be delineated in the field with signage or other measures approved by the city.

Subd. 7. Stormwater management facilities may be located in designated conservation areas.

Subd. 8. Existing land in row-cropping use shall be converted to a use that supports the achievement of the City's conservation objectives.

Section 827.69. Landscape Design Standards.
Subd. 1. Street trees may be planted, but are not required, along internal streets passing through common Conservation Areas or Open Space.

Subd. 2. Irregular spacing is encouraged for street trees, to avoid the urban appearance that regular spacing may invoke.

Subd. 3. The selection of vegetation should be guided by the natural community types identified in the City's 2008 Natural Resources Inventory.

Subd. 4. Planted buffers between clusters of residential lots are encouraged to enhance privacy and a rural appearance between lots.

Subd. 5. Buffers consisting of an informal arrangement of native plant species combined with infrequent mowing are strongly encouraged, to create a low-maintenance, natural landscape.

Subd. 6. Planted buffers are also encouraged along natural drainage areas to minimize erosion.

Subd. 7. Grading for Conservation Areas and other common landscaped areas and stormwater management areas shall be avoided to reduce compaction and impacting water infiltration rates. Soil testing and decompaction may be required if site construction activities negatively impact soil permeability.

Subd. 8. Better Site Design/Low Impact Development practices as identified in the Minnesota Stormwater Manual published by the Minnesota Pollution Control Agency shall be used to design sites and meet the performance standards.

Section 827.71. Subsurface Sewage Treatment Facilities.

Subd. 1. Where city services are not available, CD-PUD developments may be platted to accommodate home site lots with either individual septic tanks and all required drainfields/mound systems located on the lot, or individual septic tanks and primary drainfield/mount system located on the lot and secondary drainfields/mound system located in the designated Conservation Area or other Open Space.

Subd. 2. All septic systems shall conform to the current performance standards of Minnesota Rules Chapter 7080 and its appendices, or the amended Rules in effect at the time of installation. Except in instances where flexibility has been explicitly granted by the City, septic systems shall also conform to relevant City regulations, including the requirement to identify a primary and secondary drainfield site.

Subd. 3. The City may consider shared sewage treatment systems which are consistent with Minnesota Pollution Control Agency (MPCA) regulations and relevant City ordinances, provided adequate agreements are in place related to monitoring and maintenance procedures and replacement of the system in case of a failure.

Subd. 4. Secondary drainfields/mound systems may be located in designated Conservation Areas and other Open Space provided that:

(a) They are located within a limited distance of the lots they serve.

(b) Construction of drainfields/mound systems do not result in the destruction of ecological resources.

(c) The Conservation Area or Open Space parcel containing the drainfield/mound system is owned in fee by a common ownership association which owns non-Conservation

Area land within the subdivision and in which membership in the association by all property owners in the subdivision is mandatory.

(d) The individual lot owner is responsible for maintenance and repair of the drainfield/mound system.

(e) The ground cover over the drainfield/mound system is maintained according to the Land Stewardship Plan.

(f) Recreational uses are prohibited within 50 feet of the drainfields/mound systems.

(g) The Conservation Easement for the dedicated Conservation Area parcel describes the location of individual drainfields/mound systems.

Section 827.73. Site Design Process.
At the time of PUD Concept Plan development and review, applicants shall demonstrate that the following design process was performed and influenced the design of the concept site plan.

Subd. 1. Step 1—Identify Conservation Areas. Identify preservation land in two steps. First identify "unbuildable" areas which include: slopes greater than 18%, wetlands, wetland buffers, lakes, and land within the 100 year floodplain. Next, identify Conservation Areas which include those areas designated as Conservation Areas (Section 827.59 Subd. 3.) The remaining land shall be identified as the potentially Buildable Land Area. The applicant shall identify the quantity of land designated as unbuildable, Conservation Area, and potentially Buildable Land Area.

Subd. 2. Step 2—Locate Housing Sites. Locate the approximate sites of individual houses in regard to protected views and the potentially buildable land areas.

Subd. 3. Step 3—Align Streets and Trails. Align streets in order to access the lots. New trails and connections to regional trail systems, if any, should be laid out to create internal and external connections to existing and/or potential future streets, sidewalks, and trails.

Subd. 4. Step 4—Lot Lines. Draw in the lot lines.

Section 827.75. CD-PUD Application Processing.
The review and approval procedures of the PUD District shall be used to review and approve CD-PUDs. Prior to the Concept Plan Stage PUD application, the City encourages applicants to engage in an informal collaborative project goal setting process with the City. The purpose of this process is to jointly develop site design and conservation objectives and assess areas of regulatory flexibility for achieving developer and City objectives for the specific parcel of land. The Collaborative Process may include council members, city commission members, land owners, developers, city staff, other governmental jurisdiction staff, the potential future Conservation Easement holder, and other participants as appropriate. The outcome of the process is a Project Guidance Report prepared by city staff. The report will summarize the project concept, project objectives, and preliminary understanding of regulatory flexibility needed to

achieve the objectives.

Amendment History of this Section

Amended February 19, 1985 (Ord. 217-A). *Amended Sections 827.03, 827.05, 827.07, and 827.08 regarding the Shoreland District.*

Amended April 16, 1985 (Ord. 219). *Added Section 827.20 regarding Fees in the Sanitary Landfill District.*

Amended June 1, 1993 (Ord. 275). *Significantly revised Section 827.01 - 827.07 and 827.29 regarding the Shoreland Overlay District.*

Amended October 4, 1994 (Ord. 280). *Sections 827.24, 827.25, 827.27, 827.29, 827.31, and 827.33 were adopted and previous language in these sections were repealed regarding Planned Unit Development.*

Amended September 20, 2005 (Ord. 393). *Section 827.06(e) was amended regarding Individual Sewage Treatment Systems in the Shoreland Overlay District.*

Amended October 17, 2006 (Ord. 417). *Section 827.3 was amended regarding notice requirements.*

Amended July 6, 2010 (Ord. 484). *Adding new Sections 827.51 through 827.75 related to a new zoning district for conservation subdivision design.*

Amended September 21, 2010 (Ord. 492). *Adding new Section 827.60 related to the process of appealing information within the City's Open Space Report related to development in the Conservation Design District.*

Amended April 3, 2012 (Ord. 526). *Amending Section 827 regarding Planned Unit Developments.*

FLOODPLAIN DISTRICT

Section 826.74. Floodplain Management Ordinance.

Section 826.75. Statutory Authorization, Findings of Fact and Purpose.

Subd. 1. Statutory Authorization. The legislature of the State of Minnesota has, in Minnesota Statutes Chapter 103F and Chapter 462 delegated the responsibility to local government units to adopt regulations designed to minimize flood losses. Therefore, the City Council of the City of Medina, Minnesota does ordain as follows:

Subd. 2. Findings of Fact.

(a) The flood hazard areas of Medina, Minnesota, are subject to periodic inundation which results in potential loss of life, loss of property, health and safety hazards, disruption of commerce and governmental services, extraordinary public expenditures or flood protection and relief, and impairment of the tax base, all of which adversely affect the public health, safety, and general welfare.

(b) Methods Used to Analyze Flood Hazards. This ordinance is based upon a reasonable method of analyzing flood hazards which is consistent with the standards established by the Minnesota Department of Natural Resources.

(c) National Flood Insurance Program Compliance. This ordinance is adopted to comply with the rules and regulations of the National Flood Insurance Program codified as 44 Code of Federal Regulations Parts 59 -78, as amended, so as to maintain the community's eligibility in the National Flood Insurance Program.

Subd. 3. Statement of Purpose. It is the purpose of this ordinance to promote the public health, safety, and general welfare and to minimize those losses described in Section 826.75, subd. 2 (a) by provisions contained herein.

Section 826.77 General Provisions.

Subd. 1. Lands to Which Ordinance Applies. This ordinance shall apply to all lands within the jurisdiction of the city shown on the official zoning map and/or the attachments thereto as being located within the boundaries of the Floodway, Flood Fringe, or General Flood Plain Districts.

Subd. 2. Establishment of Official Zoning Map. The Official Zoning Map together with all materials attached thereto is hereby adopted by reference and declared to be a part of this ordinance. The attached material shall include the Flood Insurance Study, Volume 1 of 2 and Volume 2 of 2, Hennepin County, Minnesota, All Jurisdictions and the Flood Insurance Rate Map panels numbered 27053C0134 E, 27053C0142 E, 27053C0144 E, 27053C0153 E, 27053C0154 E, 27053C0158 E, 27053C0159 E, 27053C0165 E, 27053C0166 E, 27053C0167 E, 27053C0168 E, 27053C0169 E, 27053C0302 E, 27053C0306 E, and 27053C0307 E for the City of Medina, dated September 2, 2004, as developed by the Federal Emergency Management Agency. The official zoning map shall be on file in the office of the city clerk and the zoning administrator.

Subd. 3. Regulatory Flood Protection Elevation. The regulatory flood protection elevation shall be an elevation no lower than one foot above the elevation of the regional flood plus any increases in flood elevation caused by encroachments on the flood plain that result from designation of a floodway.

Subd. 4. Interpretation.

(a) In their interpretation and application, the provisions of this ordinance shall be held to be minimum requirements and shall be liberally construed in favor of the city and shall not be deemed a limitation or repeal of any other powers granted by state statutes.

(b) The boundaries of the zoning districts shall be determined by scaling distances on the Official Zoning Map. Where interpretation is needed as to the exact location of the boundaries of the district as shown on the Official Zoning Map, as for example where there appears to be a conflict between a mapped boundary and actual field conditions and there is a formal appeal of the decision of the zoning administrator, the city council acting as the Board of Adjustment shall make the necessary interpretation. All decisions will be based on elevations on the regional (100-year) flood profile, the ground elevations that existed on the site at the time the city adopted its initial floodplain ordinance, and other available technical data. Persons contesting the location of the district boundaries shall be given a reasonable opportunity to present their case to the Board of Adjustment and to submit technical evidence.

Subd. 5. Abrogation and Greater Restrictions. It is not intended by this ordinance to repeal, abrogate, or impair any existing easements, covenants, or deed restrictions. However, where this ordinance imposes greater restrictions, the provisions of this ordinance shall prevail. All other ordinances inconsistent with this ordinance are hereby repealed to the extent of the inconsistency only.

Subd. 6. Warning and Disclaimer of Liability. This ordinance does not imply that areas outside the flood plain districts or land uses permitted within such districts will be free from flooding or flood damages. This ordinance shall not create liability on the part of city or any officer or employee thereof for any flood damages that result from reliance on this ordinance or any administrative decision lawfully made thereunder.

Subd. 7. Severability. If any section, clause, provision, or portion of this ordinance is adjudged unconstitutional or invalid by a court of competent jurisdiction, the remainder of this ordinance shall not be affected thereby.

Subd. 8. Definitions. Unless specifically defined below, words or phrases used in this ordinance shall be interpreted so as to give them the same meaning as they have in common usage and so as to give this ordinance its most reasonable application.

(a) Accessory Use or Structure - a use or structure on the same lot with, and of a nature customarily incidental and subordinate to, the principal use or structure.

(b) Basement - means any area of a structure, including crawl spaces, having its floor or base subgrade (below ground level) on all four sides, regardless of the depth of excavation below ground level.

(c) Conditional Use - means a specific type of structure or land use listed in the official control that may be allowed but only after an in-depth review procedure and with appropriate conditions or restrictions as provided in the official zoning controls or building codes and upon a finding that:

(1) Certain conditions as detailed in the zoning ordinance exist.

(2) The structure and/or land use conform to the comprehensive land use plan if one exists and are compatible with the existing neighborhood.

(d) Equal Degree of Encroachment - a method of determining the location of floodway boundaries so that flood plain lands on both sides of a stream are capable of conveying a proportionate share of flood flows.

(e) Flood - a temporary increase in the flow or stage of a stream or in the stage of a wetland or lake that results in the inundation of normally dry areas.

(f) Flood Frequency - the frequency for which it is expected that a specific flood stage or discharge may be equaled or exceeded.

(g) Flood Fringe - that portion of the flood plain outside of the floodway. Flood fringe is synonymous with the term "floodway fringe" used in the Flood Insurance Study.

(h) Flood Plain - the beds proper and the areas adjoining a wetland, lake or watercourse which have been or hereafter may be covered by the regional flood.

(i) Flood Proofing - a combination of structural provisions, changes, or adjustments to properties and structures subject to flooding, primarily for the reduction or elimination of flood damages.

(j) Floodway - the bed of a wetland or lake and the channel of a watercourse and those portions of the adjoining flood plain which are reasonably required to carry or store the regional flood discharge.

(k) Lowest Floor - the lowest floor of the lowest enclosed area (including basement). An unfinished or flood resistant enclosure, used solely for parking of vehicles, building access, or storage in an area other than a basement area, is not considered a building's lowest floor.

(l) Manufactured Home - a structure, transportable in one or more sections, which is built on a permanent chassis and is designed for use with or without a permanent foundation when attached to the required utilities. The term "manufactured home" does not include the term "recreational vehicle."

(m) Obstruction - any dam, wall, wharf, embankment, levee, dike, pile, abutment, projection, excavation, channel modification, culvert, building, wire, fence, stockpile, refuse, fill, structure, or matter in, along, across, or projecting into any channel, watercourse, or regulatory flood plain which may impede, retard, or change the direction of the flow of water, either in itself or by catching or collecting debris carried by such water.

(n) Principal Use or Structure - means all uses or structures that are not accessory uses or structures.

(o) Reach - a hydraulic engineering term to describe a longitudinal segment of a stream or river influenced by a natural or man-made obstruction. In an urban area, the segment of a stream or river between two consecutive bridge crossings would most typically constitute a reach.

(p) Recreational Vehicle - a vehicle that is built on a single chassis, is 400 square feet or less when measured at the largest horizontal projection, is designed to be self-propelled or permanently towable by a light duty truck, and is designed primarily not for use as a permanent dwelling but as temporary living quarters for recreational, camping, travel, or seasonal use. For the purposes of this ordinance, the term recreational vehicle shall be synonymous with the term travel trailer/travel vehicle.

(q) Regional Flood - a flood which is representative of large floods known to have occurred generally in Minnesota and reasonably characteristic of what can be expected to occur on an average frequency in the magnitude of the 100-year recurrence interval. Regional flood is synonymous with the term "base flood" used in a flood insurance study.

(r) Regulatory Flood Protection Elevation - The regulatory flood protection elevation shall be an elevation no lower than one foot above the elevation of the regional flood plus any increases in flood elevation caused by encroachments on the flood plain that result from designation of a floodway.

(s) Structure - anything constructed or erected on the ground or attached to the ground or on-site utilities, including, but not limited to, buildings, factories, sheds, detached garages, cabins, manufactured homes, recreational vehicles not meeting the exemption criteria specified in Section 826.88, subd. 3 (a) of this ordinance and other similar items.

(t) Substantial Damage - means damage of any origin sustained by a structure where the cost of restoring the structure to its before damaged condition would equal or exceed 50 percent of the market value of the structure before the damage occurred.

(u) Substantial Improvement - within any consecutive 365-day period, any reconstruction, rehabilitation (including normal maintenance and repair), repair after damage, addition, or other improvement of a structure, the cost of which equals or exceeds 50 percent of the market value of the structure before the "start of construction" of the improvement. This term includes structures that have incurred "substantial damage," regardless of the actual repair work performed. The term does not, however, include either:

(1) Any project for improvement of a structure to correct existing violations of state or local health, sanitary, or safety code specifications which have been identified by the local code enforcement official and which are the minimum necessary to assure safe living conditions.

(2) Any alteration of an "historic structure," provided that the alteration will not preclude the structure's continued designation as an "historic structure." For the purpose of this ordinance, "historic structure" shall be as defined in Code of Federal Regulations, Part 59.1.

(v) Variance - means a modification of a specific permitted development standard required in an official control including this ordinance to allow an alternative development standard not stated as acceptable in the official control, but only as applied to a particular property for the purpose of alleviating a hardship, practical difficulty or unique circumstance as defined and elaborated upon in a community's respective planning and zoning enabling legislation.

Section 826.79. Establishment of Zoning Districts.

Subd. 1. Districts.

(a) Floodway District. The Floodway District shall include those areas designated as floodway on the Flood Insurance Rate Map adopted in Section 826.77, subd. 2.

(b) Flood Fringe District. The Flood Fringe District shall include those areas designated as floodway fringe. The Flood Fringe District shall include those areas shown on the Flood Insurance Rate Map as adopted in Section 826.77, subd. 2, as being within Zone AE, Zone A0, or Zone AH but being located outside of the floodway.

(c) General Flood Plain District. The General Flood Plain District shall include those areas designated as Zone A or Zones AE, Zone A0, or Zone AH without a floodway on the Flood Insurance Rate Map adopted in Section 826.77, subd. 2.

Subd. 2. Compliance. No new structure or land shall hereafter be used and no structure shall be constructed, located, extended, converted, or structurally altered without full compliance with the terms of this ordinance and other applicable regulations which apply to uses within the jurisdiction of this ordinance. Within the Floodway, Flood Fringe and General Flood Plain Districts, all uses not listed as permitted uses or conditional uses in

Sections 826.80, 826.83, and 826.84 that follow, respectively, shall be prohibited. In addition, a caution is provided here that:

(a) New manufactured homes, replacement manufactured homes and certain travel trailers and travel vehicles are subject to the general provisions of this ordinance and specifically Section 826.88.

(b) Modifications, additions, structural alterations, normal maintenance and repair, or repair after damage to existing nonconforming structures and nonconforming uses of structures or land are regulated by the general provisions of this ordinance and specifically Section 826.92.

(c) As-built elevations for elevated or flood proofed structures must be certified by ground surveys and flood proofing techniques must be designed and certified by a registered professional engineer or architect as specified in the general provisions of this ordinance and specifically as stated in Section 826.91 of this ordinance.

Section 826.80. Floodway District (FW).

Subd. 1. Permitted Uses.

(a) General farming, pasture, grazing, outdoor plant nurseries, horticulture, truck farming, forestry, sod farming, and wild crop harvesting.

(b) Industrial-commercial loading areas, parking areas, and airport landing strips.

(c) Private and public golf courses, tennis courts, driving ranges, archery ranges, picnic grounds, boat launching ramps, swimming areas, parks, wildlife and nature preserves, game farms, fish hatcheries, shooting preserves, target ranges, trap and skeet ranges, hunting and fishing areas, and single or multiple purpose recreational trails.

(d) Residential lawns, gardens, parking areas, and play areas.

Subd. 2. Standards for Floodway Permitted Uses.

(a) The use shall have a low flood damage potential.

(b) The use shall be permissible in the underlying zoning district if one exists.

(c) The use shall not obstruct flood flows or increase flood elevations and shall not involve structures, fill, obstructions, excavations or storage of materials or equipment.

Subd. 3. Conditional Uses.

(a) Structures accessory to the uses listed in subd. 1 above and the uses listed in (b) – (h) below.

(b) Extraction and storage of sand, gravel, and other materials.

(c) Marinas, boat rentals, docks, piers, wharves, and water control structures.

(d) Railroads, streets, bridges, utility transmission lines, and pipelines.

(e) Storage yards for equipment, machinery, or materials.

(f) Placement of fill or construction of fences.

(g) Recreational vehicles either on individual lots of record or in existing or new subdivisions or commercial or condominium type campgrounds, subject to the exemptions and provisions of Section 826.88, subd. 3 of this ordinance.

(h) Structural works for flood control such as levees, dikes and floodwalls constructed to any height where the intent is to protect individual structures and levees or dikes where the intent is to protect agricultural crops for a frequency flood event equal to or less than the 10-year frequency flood event.

Subd. 4. Standards for Floodway Conditional Uses.

(a) All Uses. No structure (temporary or permanent), fill (including fill for roads and levees), deposit, obstruction, storage of materials or equipment, or other uses may be allowed as a conditional use that will cause any increase in the stage of the 100-year or regional flood or cause an increase in flood damages in the reach or reaches affected.

(b) All floodway conditional uses shall be subject to the procedures and standards contained in Section 826.91, subd. 4 of this ordinance.

(c) The conditional use shall be permissible in the underlying zoning district if one exists.

(d) Fill:

(1) Fill, dredge spoil, and all other similar materials deposited or stored in the flood plain shall be protected from erosion by vegetative cover, mulching, riprap or other acceptable method.

(2) Dredge spoil sites and sand and gravel operations shall not be allowed in the floodway unless a long-term site development plan is submitted which includes an erosion/sedimentation prevention element to the plan.

(3) As an alternative, and consistent with subsection (2) immediately above, dredge spoil disposal and sand and gravel operations may allow temporary, on-site storage of fill or other materials which would have caused an increase to the stage of the 100-year or regional flood but only after the city council has received an appropriate plan which assures the removal of the materials from the floodway based upon the flood warning time available. The conditional use permit must be title registered with the property in the Office of the County Recorder.

(e) Accessory Structures:

(1) Accessory structures shall not be designed for human habitation.

(2) Accessory structures, if permitted, shall be constructed and placed on the building site so as to offer the minimum obstruction to the flow of flood waters:

(aa) Whenever possible, structures shall be constructed with the longitudinal axis parallel to the direction of flood flow; and

(bb) So far as practicable, structures shall be placed approximately on the same flood flow lines as those of adjoining structures.

(3) Accessory structures shall be elevated on fill or structurally dry flood proofed in accordance with the FP-1 or FP-2 flood proofing classifications in the State Building Code. As an alternative, an accessory structure may be flood proofed to the FP-3 or FP-4 flood proofing classification in the State Building Code provided the accessory structure constitutes a minimal investment, does not exceed 500 square feet in size at its largest projection, and for a detached garage, the detached garage must be used solely for parking of vehicles and limited storage. All flood proofed accessory structures must meet the following additional standards:

(aa) The structure must be adequately anchored to prevent flotation, collapse or lateral movement of the structure and shall be designed to equalize hydrostatic flood forces on exterior walls;

(bb) Any mechanical and utility equipment in a structure must be elevated to or above the regulatory flood protection elevation or properly flood proofed; and

(cc) To allow for the equalization of hydrostatic pressure, there must be a minimum of two "automatic" openings in the outside walls of the structure having a total net area of not less than one square inch for every square foot of enclosed area subject to flooding. There must be openings on at least two sides of the structure and the bottom of all openings must be no higher than one foot above the lowest adjacent grade to the structure. Using human intervention to open a garage door prior to flooding will not satisfy this requirement for automatic openings.

(f) Storage of Materials and Equipment:

(1) The storage or processing of materials that are, in time of flooding, flammable, explosive, or potentially injurious to human, animal, or plant life is prohibited.

(2) Storage of other materials or equipment may be allowed if readily removable from the area within the time available after a flood warning and in accordance with a plan approved by the city.

(g) Structural works for flood control that will change the course, current or cross section of protected wetlands or public waters shall be subject to the provisions of Minnesota Statute, Chapter 103G. city-wide structural works for flood control intended to remove areas from the regulatory flood plain shall not be allowed in the floodway.

(h) A levee, dike or floodwall constructed in the floodway shall not cause an increase to the 100-year or regional flood and the technical analysis must assume equal conveyance or storage loss on both sides of a stream.

Section 826.83. Flood Fringe District (FF).

Subd. 1. Permitted Uses. Permitted uses shall be those uses of land or structures listed as permitted uses in the underlying zoning use district(s). If no pre-existing, underlying zoning use districts exist, then any residential or non residential structure or use of a structure or land shall be a permitted use in the Flood Fringe District provided such use does not constitute a public nuisance. All permitted uses shall comply with the standards for Flood Fringe District "Permitted Uses" listed in Section 826.83, subd. 2, and the "Standards for all Flood Fringe Uses" listed in Section 826.83, subd. 5.

Subd. 2. Standards for Flood Fringe Permitted Uses.

(a) All structures, including accessory structures, must be elevated on fill so that the lowest floor including basement floor is at or above the regulatory flood protection elevation. The finished fill elevation for structures shall be no lower than one (1) foot below the regulatory flood protection elevation and the fill shall extend at such elevation at least (15) feet beyond the outside limits of the structure erected thereon.

(b) As an alternative to elevation on fill, accessory structures that constitute a minimal investment and that do not exceed 500 square feet at its largest projection may be internally flood proofed in accordance with Section 826.80, subd. 4 (e) (3).

(c) The cumulative placement of fill where at any one time in excess of one-thousand (1,000) cubic yards of fill is located on the parcel shall be allowable only as a conditional use, unless said fill is specifically intended to elevate a structure in accordance with Section 826.83, subd. 2 (a) of this ordinance.

(d) The storage of any materials or equipment shall be elevated on fill to the regulatory flood protection elevation.

(e) The provisions of Section 826.83, subd. 5 of this ordinance shall apply.

Subd. 3. Conditional Uses. Any structure that is not elevated on fill or flood proofed in accordance with Section 826.83, subd. 2 (a) – (b) and or any use of land that does not comply with the standards in Section 826.83, subd. 2 (c) – (d) shall only be allowable as a conditional use. An application for a conditional use shall be subject to the standards and criteria and evaluation procedures specified in Sections 826.83, subd. 4-5, and Section 826.91, subd. 4 of this ordinance.

Subd. 4. Standards for Flood Fringe Conditional Uses.

(a) Alternative elevation methods other than the use of fill may be utilized to elevate a structure's lowest floor above the regulatory flood protection elevation. These alternative methods may include the use of stilts, pilings, parallel walls, etc., or above-grade, enclosed areas such as crawl spaces or tuck under garages. The base or floor of an enclosed area shall be considered above-grade and not a structure's basement or lowest floor if: 1) the enclosed area is above-grade on at least one side of the structure; 2) it is designed to internally flood and is constructed with flood resistant materials; and 3) it is used solely for parking of vehicles, building access or storage. The above-noted alternative elevation methods are subject to the following additional standards:

(1) Design and Certification - The structure's design and as-built condition must be certified by a registered professional engineer or architect as being in compliance with the general design standards of the State Building Code and, specifically, that all electrical, heating, ventilation, plumbing and air conditioning equipment and other service facilities must be at or above the regulatory flood protection elevation or be designed to prevent flood water from entering or accumulating within these components during times of flooding.

(2) Specific Standards for Above-grade, Enclosed Areas - Above-grade, fully enclosed areas such as crawl spaces or tuck under garages must be designed to internally flood and the design plans must stipulate:

(aa) A minimum area of openings in the walls where internal flooding is to be used as a flood proofing technique. There shall be a minimum of two openings on at least two sides of the structure and the bottom of all openings shall be no higher than one-foot above grade. The automatic openings shall have a minimum net area of not less than one square inch for every square foot subject to flooding unless a registered professional engineer or architect certifies that a smaller net area would suffice. The automatic openings may be equipped with screens, louvers, valves, or other coverings or devices provided that they permit the automatic entry and exit of flood waters without any form of human intervention;

and

(bb) That the enclosed area will be designed of flood resistant materials in accordance with the FP-3 or FP-4 classifications in the State Building Code and shall be used solely for building access, parking of vehicles or storage.

(b) Basements, as defined by Section 826.77, subd. 8 (b) of this ordinance, shall be subject to the following:

(1) Residential basement construction shall not be allowed below the regulatory flood protection elevation.

(2) Non-residential basements may be allowed below the regulatory flood protection elevation provided the basement is structurally dry flood proofed in accordance with Section 826.83, subd. 4 (c) of this ordinance.

(c) All areas of non residential structures including basements to be placed below the regulatory flood protection elevation shall be flood proofed in accordance with the structurally dry flood proofing classifications in the State Building Code. Structurally dry flood proofing must meet the FP-1 or FP-2 flood proofing classification in the State Building Code and this shall require making the structure watertight with the walls substantially impermeable to the passage of water and with structural components having the capability of resisting hydrostatic and hydrodynamic loads and the effects of buoyancy. Structures flood proofed to the FP-3 or FP-4 classification shall not be permitted.

(d) When at any one time more than 1,000 cubic yards of fill or other similar material is located on a parcel for such activities as on-site storage, landscaping, sand and gravel operations, landfills, roads, dredge spoil disposal or construction of flood control works, an erosion/sedimentation control plan must be submitted unless the community is enforcing a state approved shoreland management ordinance. In the absence of a state approved shoreland ordinance, the plan must clearly specify methods to be used to stabilize the fill on site for a flood event at a minimum of the 100-year or regional flood event. The plan must be prepared and certified by a registered professional engineer or other qualified individual acceptable to the city council. The plan may incorporate alternative procedures for removal of the material from the flood plain if adequate flood warning time exists.

(e) Storage of Materials and Equipment:

(1) The storage or processing of materials that are, in time of flooding, flammable, explosive, or potentially injurious to human, animal, or plant life is prohibited.

(2) Storage of other materials or equipment may be allowed if readily removable from the area within the time available after a flood warning and in accordance with a plan approved by the city council.

(f) The provisions of Section 826.83, subd. 5 of this ordinance shall also apply.

Subd. 5. Standards for All Flood Fringe Uses.

(a) All new principal structures must have vehicular access at or above an elevation not more than two feet below the regulatory flood protection elevation. If a variance to this requirement is granted, the Board of Adjustment must specify limitations on the period of use or occupancy of the structure for times of flooding and only after determining that adequate flood warning time and local flood emergency response procedures exist.

(b) Commercial Uses - accessory land uses, such as yards, railroad tracks, and parking lots may be at elevations lower than the regulatory flood protection elevation. However, a permit for such facilities to be used by the employees or the general public shall not be granted in the absence of a flood warning system that provides adequate time for evacuation if the area would be inundated to a depth and velocity such that when multiplying the depth (in feet) times velocity (in feet per second) the product number exceeds four upon occurrence of the regional flood.

(c) Manufacturing and Industrial Uses - measures shall be taken to minimize interference with normal plant operations especially along streams having protracted flood durations. Certain accessory land uses such as yards and parking lots may be at lower elevations subject to requirements set out in Section 826.83, subd. 5 (b) above. In considering permit applications, due consideration shall be given to needs of an industry whose business requires that it be located in flood plain areas.

(d) Fill shall be properly compacted and the slopes shall be properly protected by the use of riprap, vegetative cover or other acceptable method. The Federal Emergency Management Agency (FEMA) has established criteria for removing the special flood hazard area designation for certain structures properly elevated on fill above the 100-year flood elevation - FEMA's requirements incorporate specific fill compaction and side slope protection standards for multi-structure or multi-lot developments. These standards should be investigated prior to the initiation of site preparation if a change of special flood hazard area designation will be requested.

(e) Flood plain developments shall not adversely affect the hydraulic capacity of the channel and adjoining flood plain of any tributary watercourse or drainage system where a floodway or other encroachment limit has not been specified on the Official Zoning Map.

(f) Standards for recreational vehicles are contained in Section 826.88, subd. 3.

(g) All manufactured homes must be securely anchored to an adequately anchored foundation system that resists flotation, collapse and lateral movement. Methods of anchoring may include, but are not to be limited to, use of over-the-top or frame ties to ground anchors. This requirement is in addition to applicable state or local anchoring requirements for resisting wind forces.

Section 826.84. General Flood Plain District.

Subd. 1. Permissible Uses.

(a) The uses listed in Section 826.80, subd. 1 of this ordinance shall be permitted uses.

(b) All other uses shall be subject to the floodway/flood fringe evaluation criteria pursuant to subd. 2 below. Section 826.80 shall apply if the proposed use is in the Floodway District and Section 826.83 shall apply if the proposed use is in the Flood Fringe District.

Subd.2. Procedures for Floodway and Flood Fringe Determinations Within the General Flood Plain District.

(a) Upon receipt of an application for a permit or other approval within the General Flood Plain District, the applicant shall be required to furnish such of the following information as is deemed necessary by the zoning administrator for the determination of the regulatory flood protection elevation and whether the proposed use is within the Floodway or Flood Fringe District.

(1) A typical valley cross-section(s) showing the channel of the stream, elevation of land areas adjoining each side of the channel, cross-sectional areas to be occupied by the proposed development, and high water information.

(2) Plan (surface view) showing elevations or contours of the ground, pertinent structure, fill, or storage elevations, the size, location, and spatial arrangement of all proposed and existing structures on the site, and the location and elevations of streets.

(3) Photographs showing existing land uses, vegetation upstream and downstream, and soil types.

(4) Profile showing the slope of the bottom of the channel or flow line of the stream for at least 500 feet in either direction from the proposed development.

(b) The applicant shall be responsible to submit one copy of the above information to a designated engineer or other expert person or agency for technical assistance in determining whether the proposed use is in the Floodway or Flood Fringe District and to determine the regulatory flood protection elevation. Procedures consistent with Minnesota Regulations 1983, Parts 6120.5000 - 6120.6200 and 44 Code of Federal Regulations Part 65 shall be followed in this expert evaluation. The designated engineer or expert is strongly encouraged to discuss the proposed technical evaluation methodology with the respective Department of Natural Resources' Area Hydrologist prior to commencing the analysis. The designated engineer or expert shall:

(1) Estimate the peak discharge of the regional flood.

(2) Calculate the water surface profile of the regional flood based upon a hydraulic analysis of the stream channel and overbank areas.

(3) Compute the floodway necessary to convey or store the regional flood without increasing flood stages more than 0.5 foot. A lesser stage increase than .5' shall be required if, as a result of the additional stage increase, increased flood damages would result. An equal degree of encroachment on both sides of the stream within the reach shall be assumed in computing floodway boundaries.

(c) The zoning administrator shall present the technical evaluation and findings of the designated engineer or expert to the city council. The city council must formally accept the technical evaluation and the recommended Floodway and/or Flood Fringe District boundary or deny the permit application. The city council, prior to official action, may submit the application and all supporting data and analyses to the Federal Emergency Management Agency, the Department of Natural Resources or the Planning Commission for review and comment. Once the Floodway and Flood Fringe District Boundaries have been determined, the city council shall refer the matter back to the zoning administrator who shall process the permit application consistent with the applicable provisions of Section 826.80 and 826.83 of this ordinance.

Section 826.86. Subdivisions.

Subd. 1. Review Criteria. No land shall be subdivided which is unsuitable for the reason of flooding, inadequate drainage, water supply or sewage treatment facilities. All lots within the flood plain districts shall be able to contain a building site outside of the Floodway District at or above the regulatory flood protection elevation. All subdivisions shall have water and sewage treatment facilities that comply with the provisions of this ordinance, and with section 720 Individual Sewage Treatment Standards, and have road access both to the subdivision and to the individual building sites no lower than two feet below the regulatory flood protection elevation. For all subdivisions in the flood plain, the Floodway and Flood Fringe District boundaries, the regulatory flood protection elevation and the required elevation of all access roads shall be clearly labeled on all required subdivision drawings and platting documents. For rural areas, all areas delineated on a survey or plat as being in the floodplain shall not be considered in the contiguous suitable soils calculation, as defined in section 820.29 subd. 4(a).

Subd. 2. Floodway/Flood Fringe Determinations in the General Flood Plain District. In the General Flood Plain District, applicants shall provide the information required in Section 826.84, subd. 2 of this ordinance to determine the 100-year flood elevation, the Floodway and Flood Fringe District boundaries and the regulatory flood protection elevation for the subdivision site.

Subd. 3. Removal of Special Flood Hazard Area Designation. The Federal Emergency Management Agency (FEMA) has established criteria for removing the special flood hazard area designation for certain structures properly elevated on fill above the 100-year

flood elevation. FEMA's requirements incorporate specific fill compaction and side slope protection standards for multi-structure or multi-lot developments. These standards should be investigated prior to the initiation of site preparation if a change of special flood hazard area designation will be requested.

Section 826.87. Public Utilities, Railroads, Roads and Bridges.

Subd. 1. Public Utilities. All public utilities and facilities such as gas, electrical, sewer, and water supply systems to be located in the flood plain shall be flood proofed in accordance with the State Building Code or elevated to above the regulatory flood protection elevation.

Subd. 2. Public Transportation Facilities. Railroad tracks, roads, and bridges to be located within the flood plain shall comply with Sections 826.80 and 826.83 of this ordinance. Elevation to the regulatory flood protection elevation shall be provided where failure or interruption of these transportation facilities would result in danger to the public health or safety or where such facilities are essential to the orderly functioning of the area. Minor or auxiliary roads or railroads may be constructed at a lower elevation where failure or interruption of transportation services would not endanger the public health or safety.

Subd. 3. On-site Sewage Treatment and Water Supply Systems. Where public utilities are not provided: 1) On-site water supply systems must be designed to minimize or eliminate infiltration of flood waters into the systems; and 2) New or replacement on-site sewage treatment systems must be designed to minimize or eliminate infiltration of flood waters into the systems and discharges from the systems into flood waters and they shall not be subject to impairment or contamination during times of flooding. Any sewage treatment system designed in accordance with the State's current statewide standards for on-site sewage treatment systems shall be determined to be in compliance with this Section.

Section 826.88. Manufactured Homes and Manufactured Home Parks and Placement of Travel Trailers and Travel Vehicles.

Subd. 1. New manufactured home parks and expansions to existing manufactured home parks shall be subject to the provisions placed on subdivisions by Section 826.86 of this ordinance.

Subd. 2. The placement of new or replacement manufactured homes in existing manufactured home parks or on individual lots of record that are located in flood plain districts will be treated as a new structure and may be placed only if elevated in compliance with Section 826.83 of this ordinance. If vehicular road access for pre-existing manufactured home parks is not provided in accordance with Section 826.83, subd. 5 (a) then replacement manufactured homes will not be allowed until the property owner(s) develops a flood warning emergency plan acceptable to the city council.

(a) All manufactured homes must be securely anchored to an adequately anchored foundation system that resists flotation, collapse and lateral movement. Methods

of anchoring may include, but are not to be limited to, use of over-the-top or frame ties to ground anchors. This requirement is in addition to applicable state or local anchoring requirements for resisting wind forces.

Subd. 3. Recreational vehicles that do not meet the exemption criteria specified in Section (a) below shall be subject to the provisions of this ordinance and as specifically spelled out in Sections (c) and (d) below.

(a) Exemption - Recreational vehicles are exempt from the provisions of this ordinance if they are placed in any of the areas listed in Subsection (b) below and further they meet the following criteria:

(1) Have current licenses required for highway use.

(2) Are highway ready meaning on wheels or the internal jacking system, are attached to the site only by quick disconnect type utilities commonly used in campgrounds and recreational vehicle parks and the recreational vehicle has no permanent structural type additions attached to it.

(3) The recreational vehicle and associated use must be permissible in any pre-existing, underlying zoning use district.

(b) Areas Exempted For Placement of Recreational Vehicles:

(1) Individual lots or parcels of record.

(2) Existing commercial recreational vehicle parks or campgrounds.

(3) Existing condominium type associations.

(c) Recreational vehicles exempted in Section 826.88, subd. 3 (a) lose this exemption when development occurs on the parcel exceeding $500 for a structural addition to the recreational vehicle or exceeding $500 for an accessory structure such as a garage or storage building. The recreational vehicle and all additions and accessory structures will then be treated as a new structure and shall be subject to the elevation/flood proofing requirements and the use of land restrictions specified in Sections 826.80 and 826.83 of this ordinance. There shall be no development or improvement on the parcel or attachment to the recreational vehicle that hinders the removal of the recreational vehicle to a flood free location should flooding occur.

(d) New commercial recreational vehicle parks or campgrounds and new residential type subdivisions and condominium associations and the expansion of any existing similar use exceeding five (5) units or dwelling sites shall be subject to the following:

(1) Any new or replacement recreational vehicle will be allowed in the Floodway or Flood Fringe Districts provided said recreational vehicle and its contents are

placed on fill above the regulatory flood protection elevation and proper elevated road access to the site exists in accordance with Section 826.83, subd. 5 (a) of this ordinance. No fill placed in the floodway to meet the requirements of this Section shall increase flood stages of the 100-year or regional flood.

(2) All new or replacement recreational vehicles not meeting the criteria of (1) above may, as an alternative, be allowed as a conditional use if in accordance with the following provisions and the provisions of Section 826.91, subd. 4 of the ordinance. The applicant must submit an emergency plan for the safe evacuation of all vehicles and people during the 100 year flood. Said plan shall be prepared by a registered engineer or other qualified individual, shall demonstrate that adequate time and personnel exist to carry out the evacuation, and shall demonstrate the provisions of Section 826.88, subd. 3 (a) (1) and (2) of this ordinance will be met. All attendant sewage and water facilities for new or replacement recreational vehicles must be protected or constructed so as to not be impaired or contaminated during times of flooding in accordance with Section 826.87, subd. 3 of this ordinance.

Section 826.91. Administration.

Subd. 1. Zoning Administrator. A zoning administrator or other official designated by the city council shall administer and enforce this ordinance. If the zoning administrator finds a violation of the provisions of this ordinance the zoning administrator shall notify the person responsible for such violation in accordance with the procedures stated in Section 826.95 of the ordinance.

Subd. 2. Permit Requirements.

(a) Permit Required. A Permit issued by the zoning administrator in conformity with the provisions of this ordinance shall be secured prior to the erection, addition, modification, rehabilitation (including normal maintenance and repair), or alteration of any building, structure, or portion thereof; prior to the use or change of use of a building, structure, or land; prior to the construction of a dam, fence, or on-site septic system; prior to the change or extension of a nonconforming use; prior to the repair of a structure that has been damaged by flood, fire, tornado, or any other source; and prior to the placement of fill, excavation of materials, or the storage of materials or equipment within the flood plain.

(b) Application for Permit. Application for a permit shall be made in duplicate to the zoning administrator on forms furnished by the zoning administrator and shall include the following where applicable: plans in duplicate drawn to scale, showing the nature, location, dimensions, and elevations of the lot; existing or proposed structures, fill, or storage of materials; and the location of the foregoing in relation to the stream channel.

(c) State and Federal Permits. Prior to granting a permit or processing an application for a conditional use permit or variance, the zoning administrator shall determine that the applicant has obtained all necessary state and federal permits.

(d) Certificate of Zoning Compliance for a New, Altered, or Nonconforming Use. It shall be unlawful to use, occupy, or permit the use or occupancy of any building or premises or part thereof hereafter created, erected, changed, converted, altered, or enlarged in its use or structure until a certificate of zoning compliance shall have been issued by the zoning administrator stating that the use of the building or land conforms to the requirements of this ordinance.

(e) Construction and Use to be as Provided on Applications, Plans, Permits, Variances and Certificates of Zoning Compliance. Permits, conditional use permits, or certificates of zoning compliance issued on the basis of approved plans and applications authorize only the use, arrangement, and construction set forth in such approved plans and applications, and no other use, arrangement, or construction. Any use, arrangement, or construction at variance with that authorized shall be deemed a violation of this ordinance, and punishable as provided by Section 826.95 of this ordinance.

(f) Certification. The applicant shall be required to submit certification by a registered professional engineer, registered architect, or registered land surveyor that the finished fill and building elevations were accomplished in compliance with the provisions of this ordinance. Flood proofing measures shall be certified by a registered professional engineer or registered architect.

(g) Record of First Floor Elevation. The zoning administrator shall maintain a record of the elevation of the lowest floor (including basement) of all new structures and alterations or additions to existing structures in the flood plain. The zoning administrator shall also maintain a record of the elevation to which structures or alterations and additions to structures are flood proofed.

(h) Notifications for Watercourse Alterations. The zoning administrator shall notify, in riverine situations, adjacent communities and the Commissioner of the Department of Natural Resources prior to the city authorizing any alteration or relocation of a watercourse. If the applicant has applied for a permit to work in the beds of public waters pursuant to Minnesota Statute, Chapter 103G, this shall suffice as adequate notice to the Commissioner of Natural Resources. A copy of said notification shall also be submitted to the Chicago Regional Office of the Federal Emergency Management Agency (FEMA).

(i) Notification to FEMA When Physical Changes Increase or Decrease the 100-year Flood Elevation. As soon as is practicable, but not later than six months after the date such supporting information becomes available, the zoning administrator shall notify the Chicago Regional Office of FEMA of the changes by submitting a copy of said technical or scientific data.

Subd. 3. Board of Adjustment.

(a) Rules. The Board of Adjustment shall adopt rules for the conduct of business and may exercise all of the powers conferred on such Boards by State law.

(b) Administrative Review. The Board of Adjustment shall hear and decide appeals where it is alleged there is error in any order, requirement, decision, or determination made by an administrative official in the enforcement or administration of this ordinance.

(c) Variances. The Board of Adjustment may authorize upon appeal in specific cases such relief or variance from the terms of this ordinance as will not be contrary to the public interest and only for those circumstances such as hardship, practical difficulties or circumstances unique to the property under consideration, as provided for in the respective enabling legislation for planning and zoning for cities or counties as appropriate. In the granting of such variance, the Board of Adjustment shall clearly identify in writing the specific conditions that existed consistent with the criteria specified in this ordinance, any other zoning regulations in the city, and in the respective enabling legislation that justified the granting of the variance. No variance shall have the effect of allowing in any district uses prohibited in that district, permit a lower degree of flood protection than the regulatory flood protection elevation for the particular area, or permit standards lower than those required by state law. The following additional variance criteria of the Federal Emergency Management Agency must be satisfied:

(1) Variances shall not be issued by a city within any designated regulatory floodway if any increase in flood levels during the base flood discharge would result.

(2) Variances shall only be issued by a city upon (i) a showing of good and sufficient cause, (ii) a determination that failure to grant the variance would result in exceptional hardship to the applicant, and (iii) a determination that the granting of a variance will not result in increased flood heights, additional threats to public safety, extraordinary public expense, create nuisances, cause fraud on or victimization of the public, or conflict with existing local laws or ordinances.

(3) Variances shall only be issued upon a determination that the variance is the minimum necessary, considering the flood hazard, to afford relief.

(d) Hearings. Upon filing with the Board of Adjustment of an appeal from a decision of the zoning administrator, or an application for a variance, the Board of Adjustment shall fix a reasonable time for a hearing and give due notice to the parties in interest as specified by law. The Board of Adjustment shall submit by mail to the Commissioner of Natural Resources a copy of the application for proposed variances sufficiently in advance so that the Commissioner will receive at least ten days notice of the hearing.

(e) Decisions. The Board of Adjustment shall arrive at a decision on such appeal or variance within 60 days. In passing upon an appeal, the Board of Adjustment may, so long as such action is in conformity with the provisions of this ordinance, reverse or affirm, wholly or in part, or modify the order, requirement, decision or determination of the zoning administrator or other public official. It shall make its decision in writing setting forth the findings of fact and the reasons for its decisions. In granting a variance the Board of Adjustment may prescribe appropriate conditions and safeguards such as those specified in Section 826.91, subd. 4 (f), which are in conformity with the purposes of this ordinance. Violations of such conditions and safeguards, when made a part of the terms under which the variance is granted, shall be deemed a violation of this ordinance punishable under Section 826.95. A copy of all decisions granting variances shall be forwarded by mail to the Commissioner of Natural Resources within ten days of such action.

(f) Appeals. Appeals from any decision of the Board of Adjustment may be made, and as specified in the city's official controls and also by Minnesota Statutes.

(g) Flood Insurance Notice and Record Keeping. The zoning administrator shall notify the applicant for a variance that: 1) The issuance of a variance to construct a structure below the base flood level will result in increased premium rates for flood insurance up to amounts as high as $25 for $100 of insurance coverage and 2) Such construction below the 100-year or regional flood level increases risks to life and property. Such notification shall be maintained with a record of all variance actions. A city shall maintain a record of all variance actions, including justification for their issuance, and report such variances issued in its annual or biennial report submitted to the Administrator of the National Flood Insurance Program.

Subd. 4. Conditional Uses. The planning commission and city council shall hear and decide applications for conditional uses permissible under this ordinance. Applications shall be submitted to the zoning administrator who shall forward the application to the planning commission and city council for consideration.

(a) Hearings. Upon filing with the zoning administrator an application for a conditional use permit, the zoning administrator shall submit by mail to the Commissioner of Natural Resources a copy of the application for proposed conditional use sufficiently in advance so that the Commissioner will receive at least ten days notice of the hearing.

(b) Decisions. The planning commission and city council shall arrive at a decision on a conditional use within 60 days. In granting a conditional use permit the planning commission and city council shall prescribe appropriate conditions and safeguards, in addition to those specified in Section 826.91, subd. (4) (f) which are in conformity with the purposes of this ordinance. Violations of such conditions and safeguards, when made a part of the terms under which the

conditional use permit is granted, shall be deemed a violation of this ordinance punishable under Section 826.95. A copy of all decisions granting conditional use permits shall be forwarded by mail to the Commissioner of Natural Resources within ten (10) days of such action.

(c) Procedures to be followed by the planning commission and city council in Passing on Conditional Use Permit Applications Within all Flood Plain Districts.

(1) Require the applicant to furnish such of the following information and additional information as deemed necessary by the zoning administrator for determining the suitability of the particular site for the proposed use:

(aa) Plans in triplicate drawn to scale showing the nature, location, dimensions, and elevation of the lot, existing or proposed structures, fill, storage of materials, flood proofing measures, and the relationship of the above to the location of the stream channel; and

(bb) Specifications for building construction and materials, flood proofing, filling, dredging, grading, channel improvement, storage of materials, water supply and sanitary facilities.

(2) Transmit one copy of the information described in subsection (1) above to a designated engineer or other expert person or agency for technical assistance, where necessary, in evaluating the proposed project in relation to flood heights and velocities, the seriousness of flood damage to the use, the adequacy of the plans for protection, and other technical matters.

(3) Based upon the technical evaluation of the designated engineer or expert, the planning commission and city council shall determine the specific flood hazard at the site and evaluate the suitability of the proposed use in relation to the flood hazard.

(d) Factors upon which the decision of the city council shall be based. In passing upon conditional use applications, the city council and planning commission shall consider all relevant factors specified in other sections of this ordinance, and:

(1) The danger to life and property due to increased flood heights or velocities caused by encroachments.

(2) The danger that materials may be swept onto other lands or downstream to the injury of others or they may block bridges, culverts or other hydraulic structures.

(3) The proposed water supply and sanitation systems and the ability of these systems to prevent disease, contamination, and unsanitary conditions.

(4) The susceptibility of the proposed facility and its contents to flood damage and the effect of such damage on the individual owner.

(5) The importance of the services provided by the proposed facility to the community.

(6) The requirements of the facility for a waterfront location.

(7) The availability of alternative locations not subject to flooding for the proposed use.

(8) The compatibility of the proposed use with existing development and development anticipated in the foreseeable future.

(9) The relationship of the proposed use to the comprehensive plan and flood plain management program for the area.

(10) The safety of access to the property in times of flood for ordinary and emergency vehicles.

(11) The expected heights, velocity, duration, rate of rise, and sediment transport of the flood waters expected at the site.

(12) Such other factors which are relevant to the purposes of this ordinance.

(e) Time for Acting on Application. The city council shall act on an application in the manner described above within 60 days from receiving the application, except that where additional information is required pursuant to Section 826.91, subd. 4 (d) of this ordinance. The city council shall render a written decision within 30 days from the receipt of such additional information.

(f) Conditions Attached to Conditional Use Permits. Upon consideration of the factors listed above and the purpose of this ordinance, the city council shall attach such conditions to the granting of conditional use permits as it deems necessary to fulfill the purposes of this ordinance. Such conditions may include, but are not limited to, the following:

(1) Modification of waste treatment and water supply facilities.

(2) Limitations on period of use, occupancy, and operation.

(3) Imposition of operational controls, sureties, and deed restrictions.

(4) Requirements for construction of channel modifications, compensatory storage, dikes, levees, and other protective measures.

(5) Flood proofing measures, in accordance with the State Building Code and this ordinance. The applicant shall submit a plan or document certified by a registered professional engineer or architect that the flood proofing measures are consistent with the regulatory flood protection elevation and associated flood factors for the particular area.

Section 826.92. Nonconforming Uses.

Subd. 1. A structure or the use of a structure or premises which was lawful before the passage or amendment of this ordinance but which is not in conformity with the provisions of this ordinance may be continued subject to the following conditions. Historic structures, as defined in Section 826.77, subd. 8 (u) (2) of this ordinance, shall be subject to the provisions of Subsections (a) – (e) of Section 826.92, subd. 1. of this ordinance.

(a) No such use shall be expanded, changed, enlarged, or altered in a way that increases its nonconformity.

(b) Any structural alteration or addition to a nonconforming structure or nonconforming use which would result in increasing the flood damage potential of that structure or use shall be protected to the Regulatory Flood Protection Elevation in accordance with any of the elevation on fill or flood proofing techniques (i.e., FP-1 thru FP-4 floodproofing classifications) allowable in the State Building Code, except as further restricted in (c) and (f) below.

(c) The cost of any structural alterations or additions to any nonconforming structure over the life of the structure shall not exceed 50 percent of the market value of the structure unless the conditions of this Section are satisfied. The cost of all structural alterations and additions constructed since the adoption of the city's initial flood plain controls must be calculated into today's current cost which will include all costs such as construction materials and a reasonable cost placed on all manpower or labor. If the current cost of all previous and proposed alterations and additions exceeds 50 percent of the current market value of the structure, then the structure must meet the standards of Section 826.80 or 826.83 of this ordinance for new structures depending upon whether the structure is in the Floodway or Flood Fringe District, respectively.

(d) If any nonconforming use is discontinued for 12 consecutive months, any future use of the building premises shall conform to this ordinance. The assessor shall notify the zoning administrator in writing of instances of nonconforming uses that have been discontinued for a period of 12 months.

(e) If any nonconforming use or structure is substantially damaged, as defined in Section 826.77, subd. 8 (t) of this ordinance, it shall not be reconstructed except in conformity with the provisions of this ordinance. The applicable provisions for establishing new uses or new structures in Sections 826.80, 826.83, and 826.84

will apply depending upon whether the use or structure is in the Floodway, Flood Fringe or General Flood Plain District, respectively.

(f) If a substantial improvement occurs, as defined in Section 826.77, subd. 8 (4) of this ordinance, from any combination of a building addition to the outside dimensions of the existing building or a rehabilitation, reconstruction, alteration, or other improvement to the inside dimensions of an existing nonconforming building, then the building addition (as required by Subsection (b) above) and the existing nonconforming building must meet the requirements of Section 826.80 or 826.83 of this ordinance for new structures, depending upon whether the structure is in the Floodway or Flood Fringe District, respectively.

Section 826.95. Penalties for Violation.

Subd. 1. Violation of the provisions of this ordinance or failure to comply with any of its requirements (including violations of conditions and safeguards established in connection with grants of variances or conditional uses) shall constitute a misdemeanor and shall be punishable as defined by law.

Subd. 2. Nothing herein contained shall prevent the city from taking such other lawful action as is necessary to prevent or remedy any violation. Such actions may include but are not limited to:

(a) In responding to a suspected ordinance violation, the zoning administrator and city council may utilize the full array of enforcement actions available to it including but not limited to prosecution and fines, injunctions, after-the-fact permits, orders for corrective measures or a request to the National Flood Insurance Program for denial of flood insurance availability to the guilty party. The city must act in good faith to enforce these official controls and to correct ordinance violations to the extent possible so as not to jeopardize its eligibility in the National Flood Insurance Program.

(b) When an ordinance violation is either discovered by or brought to the attention of the zoning administrator, the zoning administrator shall immediately investigate the situation and document the nature and extent of the violation of the official control. As soon as is reasonably possible, this information will be submitted to the appropriate Department of Natural Resources' and Federal Emergency Management Agency regional office along with the city's plan of action to correct the violation to the degree possible.

(c) The zoning administrator shall notify the suspected party of the requirements of this ordinance and all other official controls and the nature and extent of the suspected violation of these controls. If the structure and/or use is under construction or development, the zoning administrator may order the construction or development immediately halted until a proper permit or approval is granted by the city. If the construction or development is already completed, then the zoning administrator may either: (1) issue an order identifying the corrective actions that must be made

within a specified time period to bring the use or structure into compliance with the official controls; or (2) notify the responsible party to apply for an after-the-fact permit/development approval within a specified period of time not to exceed 30-days.

(d) If the responsible party does not appropriately respond to the zoning administrator within the specified period of time, each additional day that lapses shall constitute an additional violation of this ordinance and shall be prosecuted accordingly. The zoning administrator shall also upon the lapse of the specified response period notify the landowner to restore the land to the condition which existed prior to the violation of this ordinance.

Section 826.97. Amendments. The flood plain designation on the official zoning map shall not be removed from flood plain areas unless it can be shown that the designation is in error or that the area has been filled to or above the elevation of the regulatory flood protection elevation and is contiguous to lands outside the flood plain. Special exceptions to this rule may be permitted by the Commissioner of Natural Resources if he determines that, through other measures, lands are adequately protected for the intended use.

All amendments to this ordinance, including amendments to the official zoning map, must be submitted to and approved by the commissioner of natural resources prior to adoption. Changes in the official zoning map must meet the Federal Emergency Management Agency's (FEMA) technical conditions and criteria and must receive prior FEMA approval before adoption. The Commissioner of Natural Resources must be given 10-days written notice of all hearings to consider an amendment to this ordinance and said notice shall include a draft of the ordinance amendment or technical study under consideration.

Section 826.98. Conditional Use Permit Standards for Agricultural Preservation and Residential Districts.

Subd. 1. Purpose. It is the intent of the city in establishing general and specific criteria for conditional uses that such uses be subject to careful evaluation to ensure that their location, size and design are consistent with the standards, purposes and procedures of this ordinance and the comprehensive plan. The planning commission may recommend and the city council may impose conditions on such uses in order to affect the purpose of this ordinance.

Subd. 2. Specific Standards. In addition to the general standards specified in section 825.39 of this ordinance, no conditional use permit shall be granted unless the city council determines that all of the specific standards contained in this subdivision will be met:

(a) local government buildings:

(i) located with direct access to a collector or arterial roadway as identified in the comprehensive plan or otherwise located so that access can be provided without conducting significant traffic on local residential streets;

(ii) buildings set back a minimum of 50 feet from all property lines;

(iii) parking areas set back a minimum of 50 feet from residential property;

(iv) exterior lighting must be designed and installed so that the globe is recessed and enclosed on all sides except the bottom and no direct light is cast on adjacent residential property or rights-of-way;

(v) roof top or outside mechanical equipment must be screened from view from adjacent properties and rights-of-way;

(vi) any exterior storage must be screened from view with an opaque material architecturally compatible with the building.

(vii) no exterior bells or loudspeakers;

(viii) no more than 50 percent of the site to be covered with impervious surface and the remainder to be landscaped or left in a natural state; and

(ix) the city council may require compliance with any other conditions, restrictions or limitations it deems to be reasonably necessary to protect the residential character of the neighborhood.

(b) churches and other places of worship:

(i) located with direct access to a collector or arterial roadway as identified in the comprehensive plan;

(ii) buildings set back a minimum of 50 feet from all property lines;

(iii) parking areas set back a minimum of 50 feet from all property lines;

(iv) no more than 50 percent of the site to be covered with impervious surface and the remainder to be landscaped or left in a natural state;

(v) exterior lighting must be designed and installed so that the globe is recessed and enclosed on all sides except the bottom and no direct light is cast on adjacent residential property or rights-of-way;

(vi) roof top or outside mechanical equipment must be screened from view from adjacent properties and rights-of-way;

(vii) any exterior storage must be screened from view with an opaque material architecturally compatible with the building;

(viii) no exterior bells or loudspeakers; and

(ix) the city council may require compliance with any other conditions, restrictions or limitations it deems to be reasonably necessary to protect the residential character of the neighborhood.

(c) home occupation:

(i) not more than one person not residing in the dwelling may be employed on-site in the home occupation, regardless of the number of hours worked by the individual;

(ii) no over-the-counter retail sales;

(iii) only such signs as are permitted under section 815.09 of this ordinance;

(iv) no outside storage;

(v) the home occupation must be conducted solely within the principal structure;

(vi) limited customer, client, patient or student visits to the site in connection with the home occupation;

(vii) there must be adequate off-street parking for the anticipated number of persons on the site at any one time and the parking area must be screened from view from adjacent properties or rights-of-way;

(viii) limited deliveries associated with the home occupation in commercial vehicles over one ton;

(ix) no equipment or devices not customarily used in residential dwellings may be used in connection with the home occupation;

(x) entrance to the space used for the home occupation must be within the dwelling;

(xi) no interior or exterior alterations may be made to the dwelling to accommodate the home occupation except as may be customarily found in a dwelling;

(xii) any vehicle displaying the name of the home occupation must be parked in an enclosed garage or in an area screened from view from adjacent properties or rights-of-way;

(xiii) the home occupation may not produce any light, glare, noise or vibration perceptible beyond the boundaries of the property which is not customarily associated with residential use;

(xiv) hours of business activity may be limited by the city council to protect the public health, safety and welfare;

(xv) the home occupation must be operated in compliance with all other applicable federal, state and local statutes, ordinances, codes and regulations; and

(xvi) the city council may require compliance with any other conditions, restrictions or limitations it deems to be reasonably necessary to protect the residential character of the neighborhood.

(d) cemeteries:

(i) maximum lot area of ten acres;

(ii) located with direct access to a collector or arterial roadway as identified in the comprehensive plan;

(iii) all roadways within the cemetery must be paved and 20 feet wide unless the city determines that a wider road is necessary for public safety;

(iv) direct views from all adjoining residential parcels must be screened by appropriate means;

(v) all burial sites must be set back the greater of the following distances from all property lines. Identified future burial sites within existing cemeteries which are on file with the city prior to December 31, 2007 shall not be subject to this setback requirement:

(1) a distance equal to the structure setbacks that are required by the applicable zoning district; or

(2) twenty (20) feet.

(vi) buildings, parking areas, mausoleums, columbariums and upright grave markers that exceed 24 inches in height must be set back a minimum of 50 feet from all property lines;

(vii) all improvements, including grave sites, must be set back a minimum of 50 feet from all wetlands;

(viii) established and operated in compliance with the requirements of Minnesota Statutes, Chapters 306 or 307, as amended;

(ix) sufficient maintenance and perpetual care funds as required by Minnesota Statutes Chapters 306 or 307 shall be established;

(x) landscaping shall include overstory trees and be designed to promote a park-like setting;

(xi) monuments or markers within a cemetery shall be placed as shown on the cemetery's master plan or as directed by the city;

(xii) mausoleums shall not exceed 15 feet in height and monuments shall not exceed 10 feet in height, with height measured as it is for buildings;

(xiii) monuments and markers shall be constructed of natural stone, but no monument or marker shall be constructed of limestone, sandstone or any other type of stone that will not maintain relative permanency;

(xiv) monuments and markers shall be structurally sound and be placed upon foundations of solid masonry at a depth and size so as to assure no settling or movement of the marker or monument;

(xv) concrete aprons at least four inches in width that are level with the ground shall be placed around monuments and be affixed to them so as to prevent grass, weeds or other vegetation from growing in between the monuments and aprons;

(xvi) a site plan acceptable to the city council must be submitted and reviewed under the city's site plan ordinance;

(xvii)a master plan for the build-out of the property which includes the number and location of all burial lots; the phasing of selling/filling the burial lots; the assigned numbers for the burial lots; descriptions and locations of any other improvements to be located on the property; and a description of the cemetery's records retention system must be submitted and approved by the city council;

(xviii) ground water tests shall be performed prior to city council approval in order to determine high water tables and any springs located on the site;

(xix) the city council may require a transportation plan that includes traffic management for burials, funerals and burial site visits;

(xx) the city council may require an environmental assessment of the proposed use;

(xxi) in addition to the requirements set forth in this provision, the city council may require compliance with any other conditions, restrictions or limitations regarding the type, location, size, material, number, the manner of placement and installation, and removal of monuments, markers, mausoleums, columbariums and plantings that are permitted within the cemetery it deems to be reasonably necessary to protect the residential character of the neighborhood.

(xxii) the city council may require compliance with any other conditions, restrictions or limitations it deems to be reasonably necessary to protect the residential character of the neighborhood.

(e) private use of windmills or Wind Energy Conversion Systems (WECS): shall meet the

requirements set forth in Section 828.09.1 of this code.

(f) public, private or charter schools having a course of instruction approved by the Minnesota department of education for students enrolled in K through grade 12, or any portion thereof:

(i) located with direct access to a collector or arterial street as identified in the comprehensive plan;

(ii) buildings set back a minimum 50 feet from all property lines;

(iii) parking areas set back a minimum of 50 feet from all property lines;

(iv) bus drop-off and pick-up areas must be located outside of the public right-of-way and designed to enhance vehicular and pedestrian safely;

(v) recreational areas designed for group sports activities set back a minimum of 50 feet from residential property with adequate screening to protect neighboring properties from noise and adverse visual impacts;

(vi) no lighted playing fields unless the visual impact on residential areas can be substantially mitigated;

(vii) no more than 50 percent of the site to be covered with impervious surface and the remainder to be suitably landscaped;

(viii) exterior lighting must be designed and installed so that the globe is recessed and enclosed on all sides except the bottom and no direct light is cast on adjacent residential property or rights-of-way;

(ix) roof top or outside mechanical equipment must be screened from view from adjacent properties and rights-of-way;

(x) any exterior storage must be screened from view with an opaque material architecturally compatible with the building; and

(xi) the city council may require compliance with any other conditions, restrictions or limitations it deems to be reasonably necessary to protect the residential character of the neighborhood.

(g) outdoor recreational facilities including non-commercial parks, golf courses, and driving ranges:

(i) located with direct access to a collector or arterial street as identified in the comprehensive plan;

(ii) buildings set back 50 feet from all property lines;

(iii) parking areas set back a minimum of 50 feet from all property lines;

(iv) exterior lighting must be designed and installed so that the globe is recessed and enclosed on all sides except the bottom and no direct light is cast on adjacent residential property or rights-of-way;

(v) no exterior bells or loudspeakers;

(vi) no more than 50 percent of the site to be covered with impervious surface and the remainder to be suitably landscaped; and

(vii) the city council may require compliance with any other conditions, restrictions or limitations it deems to be reasonably necessary to protect the residential character of the neighborhood.

(h) commercial riding stable – must operate in conformance with the standards of section 826.26.1, subd. 2 of this ordinance.

(i) clinics and nursing homes and small animal clinics:

(i) located with direct access to a collector or arterial roadway as identified in the comprehensive plan;

(ii) buildings set back a minimum of 50 feet from all property lines;

(iii) parking areas set back a minimum of 50 feet from all property lines;

(iv) no more than 50 percent of the site to be covered with impervious surface and the remainder to be suitably landscaped;

(v) exterior lighting must be designed and installed so that the globe is recessed and enclosed on all sides except the bottom and no direct light is cast on adjacent residential property or rights-of-way;

(vi) roof top or outside mechanical equipment must be screened from view from adjacent properties and rights-of-way;

(vii) any exterior storage must be screened from view with an opaque material architecturally compatible with the building; and

(viii) the city council may require compliance with any other conditions, restrictions or limitations it deems to be reasonably necessary to protect the residential character of the neighborhood.

(j) nursery schools:

(i) located with direct access to a collector or arterial roadway as identified in the comprehensive plan;

(ii) buildings set back a minimum of 50 feet from all property lines;

(iii) parking areas set back a minimum of 50 feet from rights-of-way and residential property;

(iv) drop-off and pick-up areas must be located outside the public rights-of-way and designed to enhance vehicular and pedestrian safety;

(v) recreational areas designed for group activities set back a minimum of 25 feet from residential property with adequate screening to protect neighboring properties from noise and adverse visual efforts;

(vi) exterior lighting must be designed and installed so that the globe is recessed and enclosed on all sides except the bottom and no direct light is cast on adjacent residential property or rights-of-way;

(vii) roof top or outside mechanical equipment must be screened from view from adjacent properties and rights-of-way;

(viii) any exterior storage must be screened from view with an opaque material architecturally compatible with the building; and

(ix) the city council may require compliance with any other conditions, restrictions or limitations it deems to be reasonably necessary to protect the residential character of the neighborhood.

(k) essential services - must meet the definition contained in section 825.07, subd. 29 of this ordinance.

(l) second principal residential dwelling structure on parcels 40 acres or larger in size:

(i) may be used only by members of the family, by persons employed on the property or as a guest house;

(ii) must be located in reasonable proximity to primary and secondary septic sites other than those associated with the first principal structure;

(iii) must meet all setback requirements;

(iv) must be shown on a shadow or ghost plat submitted to the city to be located in such a manner as to make future subdivision of the parcel feasible without the need for variances; and

(v) the city council may require compliance with any other conditions, restrictions or limitations it deems reasonably necessary to protect the residential character of the neighborhood.

(m) accessory building standards for residential properties greater than five acres in area:

(i) The accessory building's design shall include architectural interest through the appropriate use of the following elements: cupolas, dormers, windows, porches, overhangs, varied building foundation, or other design treatments which the city council determines create a quality architectural design that enhances the appearance of the accessory building and complements the principal dwelling and the rural residential character or residential neighborhood in which the building is to be constructed;

(ii) At least two colors or textures shall be used in the accessory building's exterior design, including contrasting trim or fascia;

(iii) Any metal exterior materials on the accessory building shall be warranted to resist fading for a period of at least 15 years; and

(iv) The accessory building shall have an infiltration basin, rain garden, rain barrel or other similar best management practice used to capture storm water runoff from the building and to improve water quality. Said best management practice must be reviewed and approved by the city council.

(n) multiple dwelling unit structures over 30 feet in height in the MR district:

(i) buildings exceeding 30 feet in height shall be constructed with setbacks at least twice as great as those required in section 826.43, subd. 2(e) and (f) where the property adjoins land zoned for single family residential use;

(ii) buildings exceeding 30 feet in height shall be constructed with setbacks equal to those required
in section 826.43, subd. 2(e) and (f) plus an additional 1 foot for every 1 foot by which the height of the building exceeds 30 feet where the property does not adjoin land zoned for single family residential use;

(iii) the portions of the building greater than 30 feet in height shall be uninhabited and not planned for storage or such area shall be sprinkled or equipped with such other fire suppression devices as may be required by the fire marshal;

(iv) the height of the building must be in compliance with state and federal height limitations regarding the operation of aircraft; and

(v) the city council may require compliance with any other conditions, restrictions or limitations it
deems to be reasonably necessary to ensure persons and property against injury or damage by fire.

(o) Sites which exceed the number of animals allowed under Section 826.25. Subd. 8:

(i) the property shall contain a minimum of three grazable acres;

(ii) animal units shall not exceed one and one-half times the allowed density under Section 826.25 Subd. 8;

(iii) all animal feed and bedding must be stored within an enclosed building;

(iv) the size of the barn or stable shall be suitable to the total number of additional animal units requested under this conditional use permit.

(v) the subject site shall incorporate various Low Impact Design (LID) features and/or Best Management Practices (BMPs) that provide for the most effective means of manure management, such that no net increase in runoff or nutrient loading occurs from the site, as determined by the City Engineer.

(vi) the subject site shall construct a concrete manure containment or composting area, the design of which shall be consistent with the recommendations of the University of Minnesota Extension Service. Owners shall provide a schedule for removal of manure or compost from affected sites, subject to the approval by the City.

(vii) a grading plan shall be submitted and approved by the City in accordance with the recommendations of the University of Minnesota Extension Service and approved by the City Engineer. Said plan shall clearly demonstrate that storm water runoff from the hard surfaces on the property is directed away from the stable areas and manure containment facilities, and surrounding wetlands, streams or lakes (if any) and the site must maintain these drainage patterns to the satisfaction of the City;

(viii) the site shall install runoff retention and vegetative infiltration systems, consistent with the recommendations of the University of Minnesota Extension Service and as approved by the City, down slope from the stables and manure containment area. The vegetation adjacent to any wetlands shall be subject to the city's wetland protection ordinance;

(ix) diligent effort shall be made to prevent the cribbing of trees in or near pastures, and efforts to maintain grass in the pastures by limiting use thereof as appropriate and by providing supplemental feed to prevent over grazing by instituting a pasture management program in accordance with the recommendation of the University of Minnesota Extension Service and as approved by the City; and

(x) the city council may require compliance with any other conditions, restrictions or limitations it deems to be reasonably necessary to protect the residential character of the neighborhood.

(p) Accessory Dwelling Units.

(i) No more than one accessory dwelling unit shall be located on a property. No accessory dwelling unit shall be permitted upon a property on which a lodging room or a second residential dwelling is located;

(ii) Accessory dwelling units within the SR (Suburban Residential), UR (Urban Residential), R1 (Single-Family Residential) or R2 (Two-Family Residential) zoning districts shall be attached to the principal single family structure;

(iii) The lot shall contain an existing single-family dwelling unit;

(iv) The habitable area of the accessory dwelling unit shall not exceed the lesser of the following: 1) 750 square feet for a one-bedroom unit; 2) 1,000 square feet for a two-bedroom unit; or 3) 40 percent of the habitable area of the principal single-family dwelling;

(v) The accessory dwelling unit shall contain a minimum of 300 square feet of habitable space;

(vi) The accessory dwelling unit shall contain no more than two bedrooms;

(vii) A minimum of one off-street parking space shall be provided per bedroom for the accessory dwelling unit. Such parking spaces shall not interfere with accessing the required garage spaces for the principal single-family dwelling;

(viii) No separate driveway or curb cut shall be permitted to serve the accessory dwelling unit;

(ix) No accessory dwelling unit shall be sold or conveyed separately from the principal single-family dwelling;

(x) The property owner shall occupy either the principal single-family dwelling or the accessory dwelling unit as their primary residence;

(xi) If the accessory dwelling unit is located within a structure detached from the principal single-family dwelling, the architectural design and building materials shall be of the same or higher quality and shall complement the single-family dwelling. Additionally, the structure shall meet the setback requirements of the principal structure and shall count towards the maximum number and building size of accessory structures permitted on a property;

(xii) Adequate utility services shall be available to serve the accessory dwelling unit. This shall include adequate capacity within individual sewage treatment systems for both the principal single family dwelling and the accessory dwelling, where applicable.

(xiii) Any exterior stairway which accesses an accessory dwelling unit above the first floor shall be located in a way to minimize visibility from the street and, to the extent possible, from neighboring property. Such stairway shall incorporate a deck a minimum of 27 square feet in area; and

(xiv) The city council may require compliance with any other conditions, restrictions or limitations it deems to be reasonably necessary to protect the single-family residential character of the surrounding area. A copy of the resolution approving an accessory dwelling unit and describing the conditions, restrictions and limitations on the use shall be recorded against the property.

Amendment History of this Section

November 5, 1985 – *Ord. 224 – Added Section 826.26 and Subd. 3 of Section 826.01, establishing the Rural Residential 1 Zoning District.*

June 30, 1987 – *Ord. 224 – Amended Section 826.25 regarding setbacks and height requirements.*

April 17, 1990 – *Ord. 243-A – Added Sections 828.73, 828.48 and 828.60 as well as Subd. 5 of Section 826.09 and Subd. 5 of Section 826.19 regarding landspreading of yard waste.*

December 18, 1990 – *Ord. 249 – Added Section 826.26.1, establishing the Rural Residential-2 (RR-2) Zoning District.*

March 5, 1991 – *Ord. 251 – Amended Subd. 2 of Section 826.25, Subd. 2 of Section 826.51 and Subd. 2 of Section 826.63 adding that minimum lot size requirements are decided using "contiguous" soils in the Rural Residential District, Rural Commercial District and Rural Industrial District.*

May 7, 1991 – *Ord. 253 – Former language of Section 826.26.1 was repealed in its entirety and replaced by the language in Ord. 253 regarding the Rural Residential-2 District.*

June 4, 1991 – *Ord. 255 – Former language of Sections 826.75 through 826.97 were repealed in their entirety and replaced by the language of Ord. 255 regarding the Floodplain District.*

March 9, 1992 – *Ord. 262 – Amended Subd. 3 and 11 of Section 826.19, Subd. 8 of Section 826.23, Subd. 3 of Section 826.31 and Subd. 6 of Section 826.33 regarding Home Occupations in the Rural Residential and Urban Residential Districts.*

May 19, 1992 – *Ord. 268 – Amended Sections 826.47 through 826.67 regarding the Commercial and Industrial Districts.*

August 4, 1992 – *Ord. 270 – Added Subd. 5 of Section 826.01 and Sections 826.26.2, 826.26.3, 826.26.4, 826.26.5, 826.26.6 and 826.26.7, establishing the Suburban Residential Zoning District.*

Such penalty may be imposed in addition to an action against the financial securities, suspension or revocation of the Tree Replacement permit.

Section 828.43. Wetlands Conservation.

Subd. 1. Purpose. The city council of the city of Medina finds that wetlands serve a variety of beneficial functions. Wetlands maintain water quality, reduce flooding and erosion, provide food and habitat for wildlife, provide open space, and are an integral part of the city's environment. Wetlands are also important physical, educational, ecological, aesthetic, recreational and economic assets to the city. They are critical to the city's stormwater management and other aspects of the public health, safety and general welfare. Protecting wetlands and regulating the land uses around them is therefore in the public interest.

Subd. 2. Definitions. For the purposes of this section, the following terms shall have the meanings given to them:

(a) "Applicant" means the individual or entity submitting a land use application to the city.

(b) "Buffer Setback" means the minimum horizontal distance between a structure and the nearest edge of the Upland Buffer Zone. The purpose of the Buffer Setback is to protect the Upland Buffer Zone.

(c) "DNR Mapped Area" means a location identified by the Minnesota Department of Natural Resources as a Site of Biodiversity Significance or by the Minnesota Department of Natural Resources County Biological Survey as a High Quality Natural Area.

(d) "MnRAM" means the Minnesota Routine Assessment Methodology for Evaluating Wetland Functions as referenced in Minnesota Rules 8420.0549 and maintained by the Minnesota Board of Soil and Water Resources. MnRAM is a field tool used to assess Wetland functions on a qualitative basis. Wetland functions assessed by MnRAM include: floral diversity and integrity; wildlife habitat; water quality protection; flood and stormwater attenuation; recreation; aesthetics; education; science; fishery habitat; shoreline protection; groundwater interaction; and commercial uses.

(e) "Native Vegetation" means plant species indigenous to or naturalized to the Hennepin County Region of the State of Minnesota or plant species classified by the Minnesota Department of Natural Resources as native in the Minnesota Native Plant Database. Native Vegetation does not include Weeds as defined by this section.

(f) "Non-native Vegetation" means species not indigenous to or naturalized to the Hennepin County Region of the State of Minnesota by the Department of Natural Resources or plant species.

(g) "Upland Buffer Zone" means an area or areas of vegetated ground cover around the perimeter of a Wetland that, either in its natural condition or through intervention, is critical to the protection of that Wetland. An Upland Buffer Zone protects the edge of a Wetland from erosion and filter sediment, chemicals and other nutrients from the runoff that drains into the Wetland. An Upland Buffer Zone also provides wildlife habitat and assists in maintaining diversity of both plant and animal species within the city. It also reduces human disturbances to the Wetland by providing a visual and physical transition area from a yard to a Wetland.

(h) "WCA" means the Minnesota Wetland Conservation Act of 1991, Minnesota Statutes Sections 103G.222 - .2373. The city of Medina shall be designated as the Local Government Unit for the purposes of the WCA.

(i) "Weeds" mean (i) "noxious weeds" as defined and designated pursuant to the "Minnesota Noxious Weed Law," Minnesota Statutes Sections 18.76 through 18.88, as amended from time to time, or (ii) any volunteer plants, including, but not limited to, spotted knapweed (*Centaurea Maculosa*) or burdock (*Arctium Minus*). For the purposes of this section, Weeds shall not include dandelions or clover. The city weed inspector and/or assistant city weed inspector shall maintain a current list of plants that are defined as "Weeds" for purposes of this section.

(j) "Wetland" means a land that is transitional between terrestrial and aquatic systems where the water table is usually at or near the surface or the land is covered by shallow water. For purposes of this section, in order for a land to be considered a "Wetland," it must have all of the following characteristics: (i) a predominance of hydric soils; (ii) be inundated or saturated by surface or ground water at a frequency and duration sufficient to support a prevalence of hydrophytic vegetation typically adapted for life in saturated soil conditions; and (iii) under normal circumstances, support a prevalence of hydrophytic vegetation.

(k) "WMCM" means a Wetland Management Classification Map which is to be maintained by the city. The WMCM shall classify each Wetland in the city as one or more of the following types: "Preserve," "Manage 1," "Manage 2," and "Manage 3." The classification shall be based on an assessment using MnRAM. The WMCM is hereby adopted by reference and a copy of which shall be kept on file in the office of the zoning administrator. It shall be available for public review during all normal city office hours.

Subd. 3. General Provisions.

(a) In order to protect Wetlands, this section incorporates by reference the WCA and any future amendments to the WCA. In the event that any requirements of this section are inconsistent with the WCA, the stricter provision that provides the

most protection for Wetlands shall apply.

(b) Any structure erected following the effective date of this section shall be set back the greater of the following distances:
(i) The Buffer Setback required by subdivision 5(a) of this section;
(ii) Wetland setback required by zoning district-specific regulations, if applicable; or
(iii) A minimum of 20 feet from the edge of the delineated Wetland, as approved by the city.

(c) Applicability. The Upland Buffer Zone and Buffer Setback requirements of this section shall apply to all property containing Wetlands in the following circumstances:

(i) When any new development activity occurs on the property. For purposes of this section, "new development activity" means:

(A) Any subdivision, as defined by state law;

(B) Any site plan review required by Medina City Code section 825.55;

(C) Any planned unit development general plan;

(D) Construction of a principal structure on an existing vacant lot;

(E) Redevelopment of a property which meets all of the following conditions:

1) results in the removal of more than 50 percent of the market value of the principal structure;

2) the structure's removal is followed by reconstruction (except as exempted by subdivision 3 (d) of this section); and

3) results in a net increase in the square footage of impervious surfaces that drain to a Wetland, or results in the relocation of impervious surfaces closer to a Wetland, or results in changes to drainage patterns (slopes, meander patterns, etc.) that the city engineer determines will increase the velocity or rate of runoff to a Wetland;

(F) Any project that involves draining, filling, excavating, or alterating a Wetland except if:
1) less than 50 cubic yards of disturbance is completed, and

2) the city determines that the project improves drainage infrastructure and/or the function or value of the wetland.

(G) Any project that alters or fills land below the projected 100-year high water elevation of a body of water.

(ii) Any other land use application which proposes more than 50 cubic yards of grading disturbance, which requires city review, and which is not specified above, including, but not limited to, conditional use permits, interim use permits, and variances; or

(iii) When there is a construction or land alteration activity on a property that does not fall within the above categories, but that meets all of the following conditions:

(A) The portion of the property to be disturbed by the construction or land alteration activity naturally drains to a Wetland;

(B) The amount of grading on the property exceeds 50 cubic yards or the construction activity involves the disturbance of an area of more than 5,000 square feet; and

(C) The proposed activity increases the amount of impervious surface within 100 feet of the Wetland by more than 1,000 square feet.

(iv) Activities described in subdivision 3(c)(i)(D), subdivision 3(c)(i)(E), or subdivision 3(c)(iii) of this section for which a building permit has been issued prior to January 1, 2010 shall not be subject to the Upland Buffer Zone and Buffer Setback requirements of this section.

(d) Exemptions. The Upland Buffer Zone and Buffer Setback requirements of this section shall not apply to the following:

(i) Any plat which has received preliminary approval or any other land use application which has received final approval by the city council prior to the effective date of this section;

(ii) Reconstruction of a legal non-conforming structure that was destroyed by fire or other peril that is permitted to be reconstructed by city code and state statute;

(iii) Any previously buildable parcel existing prior to the effective date of this section which is rendered unbuildable under city code because of the implementation of the Upland Buffer Zone and Buffer Setbacks as required by this section and other restrictions in the zoning ordinance;

(iv) Any parcel existing prior to the effective date of this section on which a wetland buffer has been established as required by the city or another governmental entity having relevant jurisidiction. However, upon further subdivision, or if an applicable activity is proposed in a location which drains directly towards a wetland without a wetland buffer, the Upland Buffer Zone and Buffer Setback requirements of this section shall apply; or

(v) Any agricultural activity exempted from the requirement for a wetland replacement plan pursuant to the WCA.

Subd. 4. Application Materials. An Applicant shall submit the following information to the city along with all other materials required by city code with respect to any land use application or permit application:

(a) A grading plan (if grading is proposed), including the area and volume of land disturbance;

(b) The square footage of the proposed structure and any impervious surface;

(c) A Wetland delineation report. It is the responsibility of the Applicant to determine whether Wetlands exist on the property by completing a Wetland delineation and submitting a Wetland delineation report. The following shall apply to the Wetland delineation report:

(i) The report shall delineate and document the boundaries of any Wetlands on the property in accordance with the WCA requirements;

(ii) The city shall require that the Wetland delineation be performed by a certified Wetland delineator. The Wetland delineation must be performed according to the 1987 U.S. Army Corps of Engineers Wetland Delineation Manual and subsequent amendments, and be acceptable to the city engineer. The city engineer shall have complete discretion in determining whether the Wetland delineation report is acceptable;

(iii) The report shall state the WMCM classifications for all Wetlands located on the property. If a Wetland on the property is not shown or classified on the WMCM, the Applicant shall submit a completed electronic copy of the MnRAM form for the Wetland to the city. The MnRAM form shall be completed by a certified Wetland delineator;

(iv) Wetland delineations and any required MnRAM classifications shall be completed by the Applicant between April 20th and October 20th of the given year and must be submitted to the city for review no later than November 1st. A Wetland delineation completed outside these dates or submitted later than November 1st may be considered to be incomplete;

(v) Wetland classification appeal. In the event that the Applicant is not in agreement with a Wetland's WMCM classification, the Applicant may appeal the classification to the city. The Applicant shall put the appeal in writing and include supporting documentation. The appeal will be reviewed by city staff and decided by a technical evaluation panel, members of which will be determined by the city council. The technical evaluation panel shall make a determination on the appeal within forty-five days of receipt of a complete appeal application. The Applicant may appeal the technical evaluation panel's decision to the city council. The appeal must be filed within thirty days of the technical evaluation panel's decision; and

(vi) The city shall place any approved Wetland classifications on the WMCM.

(d) A certificate of survey or site plan describing the proposed activity and showing the Upland Buffer Zones to the Wetlands on the property;

(e) An Upland Buffer Zone landscaping plan, if required;

(f) Any submittals required by the WCA;

(g) Legal descriptions of the Wetlands and Upland Buffer Zones; and

(h) Funds deposited in an amount to be determined by the city to be used for any expenses incurred by the city in completing its review of the Wetland delineation report, Wetland ordinance compliance, a WMCM classification or DNR Mapped area appeal, and, if appropriate, developing a Wetland boundary estimate and determining if the Upland Buffer Zones proposed by the Applicant meet the requirements of this section.

(i) A plan identifying measures to protect wetlands from intrusion during construction. These measures may include silt fencing, snow fencing, signage, or other measures determined by the city. While determining the required protection, the city shall consider the WMCM classification of the Wetland, the proximity of proposed disturbance to the Wetland, and the likelihood of intrusion.

Subd. 5. Upland Buffer Zone and Required Buffer Setbacks.

(a) If a new development activity, as defined in subdivision 3(c)(i) of this section, is proposed, the following Upland Buffer Zone and Buffer Setbacks shall be required for each Wetland, or portion of Wetland, within the subject property. In the event that zoning district regulations differ from the following table, the standards or procedures described within the zoning district regulations shall be required:

	Upland Buffer Zone Average	Minimum Upland Buffer	Buffer Setback	Buffer Setback

Wetland Classification	Width	Zone Width	(Principal Structure)	(Accessory Structure)
Preserve (at least partly within or adjacent to a DNR Mapped Area)	50 feet	30 feet	15 feet	5 feet
All Other Preserve	35 feet	25 feet	15 feet	5 feet
Manage 1	30 feet	20 feet	15 feet	5 feet
Manage 2	25 feet	20 feet	15 feet	5 feet
Manage 3	20 feet	15 feet	15 feet	5 feet

The width of the Upland Buffer Zone may vary along the Wetland's boundaries, so long as the following conditions are met:

(i) The Upland Buffer Zone's width does not fall below the minimum Upland Buffer Zone width at any location;

(ii) The total area of the Upland Buffer Zone meets or exceeds the total area which would be required if the Upland Buffer Zone average width was utilized; and

(iii) Areas that are within an Upland Buffer Zone with a preconstruction slope exceeding 12 percent must meet or exceed the Upland Buffer Zone average width requirement.

(b) If an activity as defined by subdivision 3(c)(ii) or subdivision 3(c)(iii) of this section is proposed, an Upland Buffer Zone with an average width of 20 feet and a minimum width of 15 feet shall be required adjacent to the portion of the Wetland downgradient from the proposed activity. The Upland Buffer Zone must meet all requirements of this section, except that a conservation easement shall not be required provided that the Upland Buffer Zone is documented using an alternate form required by the city.

(c) All Upland Buffer Zones shall be measured from the edge of the delineated Wetland, as approved by the city, into the adjacent upland area.

(d) The total area required for an Upland Buffer Zone shall not exceed 200 percent of the area of the adjacent Wetland. If the Upland Buffer Zone width is reduced subject to this clause, the width shall not vary along the Wetland's boundary unless the city determines that such variation results in increased protection of the Wetland.

(e) Upland Buffer Zones shall not be required for Wetlands under 1,000 square feet in size. The setback requirements described in Subd. 3(b) of this section shall apply.

(f) The Upland Buffer Zone requirements of this section may be reduced at the discretion of the city council and if all of the following conditions are met:

(i) The Applicant implements practices which are superior at meeting the long-term purposes of the section than would be possible through strict adherence to the requirements of this section;

(ii) The total area of the proposed Upland Buffer Zone exceeds that which would result if the required minimum Upland Buffer Zone width was utilized around the entire Wetland; and

(iii) The proposed Upland Buffer Zone width does not fall below 75 percent of the required minimum Upland Buffer Zone width at any location around the entire Wetland.

(g) Where existing structures or impervious surfaces are located within an area that would be required to be included in an Upland Buffer Zone, alternative methods to protect the Wetland may be approved by the city staff in order to avoid creating unreasonable impacts on the existing use of the property. Such methods may include, but are not limited to, Upland Buffer Zone width averaging below the minimum required, redirection of drainage to a different area where an Upland Buffer Zone is feasible while still maintaining the drainage to the Wetland, or the use of rainwater gardens, vegetated swales or other best management practices for treating runoff.

(h) The city recognizes that the ability of an Applicant to implement the Upland Buffer Zones required by this section may be constrained when there is an activity proposed within existing right-of-way or adjacent to existing roadways that is located on property that is not controlled by the Applicant. In these situations, Upland Buffer Zone mitigation shall not be required, but the Applicant shall make reasonable efforts to fulfill the requirements of this section to the extent possible.

(i) In the event that a Wetland is identified on city documents to be at least partly within or adjacent to a DNR Mapped Area, and the Applicant disagrees with such a determination, the Applicant may appeal to the city.

(i) The Applicant shall submit the appeal in writing and include supporting documentation.

(ii) City staff shall make a decision on the appeal within 45 days of receipt of a complete appeal application.

(iii) The Applicant may appeal the decision of city staff to the city council. This appeal must be filed with the City within 30 days of city staff's decision.

Subd. 6. Alterations within Wetlands and Upland Buffer Zones.

(a) The area within Wetlands and Upland Buffer Zones shall be preserved predominately in their natural states, except to the extent set forth below. With the exception of activities defined by subdivision 3(c)(iii) of this section where a smaller Upland Buffer Zone is required, Upland Buffer Zones must be protected by a conservation easement granted to the city by the Applicant in a form provided by the city. The conservation easement will preserve the natural state of the Upland Buffer Zones by restricting the activities that are allowed within the easement areas. The easement will give the city the authority to enforce the conservation easement restrictions. Additional public uses within the conservation easement, such as a trail, will not be required by the city for these purposes but may be required pursuant to other applicable city requirements.

(b) Any alterations within the Wetland and Upland Buffer Zone, except those stated below, are prohibited, including, but not limited to, the installation or placement of structures and impervious surfaces, the operation of construction machinery, the destruction or removal of trees, shrubs or other vegetation, the introduction of any Non-native Vegetation, any mowing, dredging or excavation activities and the placement or storage of any fill material, manure, or trash and the application of fertilizer. The following activities are permitted:

(i) Activities described within an Upland Buffer Zone landscaping or mitigation plan, or a WCA application that was approved by the city;

(ii) The removal of Non-native Vegetation;

(iii) Necessary alterations related to the establishment and maintenance of the native vegetation within the Upland Buffer Zone;

(iv) Proposed alterations which are determined by the city to be consistent with the vegetative standards and the purposes of this section;

(v) The removal of dead or diseased trees;

(vi) The installation of utility poles, underground utility lines, light poles, traffic regulatory signs and signals, mailboxes, and other equipment that is determined by the city to provide an essential public service;

(vii) The installation of public and private flood control structures, ponding and drainage facilities and associated accessory appurtenances as approved by the city;

(viii) The installation of environmental monitoring or control facilities, including those related to water quality and wildlife regulation;

(ix) The mowing of or installation of permeable pathways not to exceed four feet in width to allow reasonable access to the Wetland;

(x) The installation of boardwalks, docks or other structures to allow reasonable access to the Wetland. These structures shall not exceed four feet in width or have poles greater than eight inches in diameter;

(xi) The installation of public trails, if required. The temporary and permanent trail disturbance shall not exceed eight feet in width and must be located outside of the minimum width of the required Upland Buffer Zone.

Subd. 7. Upland Buffer Zone Markers. All Upland Buffer Zones shall be identified with markers. The Applicant shall be responsible for the costs of obtaining and installing the markers. At a minimum, one marker shall be placed per lot at the upslope edge of the Upland Buffer Zone and then placed every 250 feet thereafter and on all common lot lines.

(a) Proposed locations of the markers shall be shown on the grading or site plan for the property. The location of the markers shall capture the portion of the Upland Buffer Zone that extends the furthest upslope into the lot. A plan that shows the location of the marker shall be provided to the city for its review and approval.

(b) Artwork and verbiage on the sign shall face away from the Wetland..

(c) Sign dimensions, specifications, verbiage, and artwork shall be specified by the city and provided to the Applicant.

Subd. 8. Vegetation Performance Standards. Upland Buffer Zones shall meet the following vegetation performance standards:

(a) Where acceptable natural vegetation exists in an Upland Buffer Zone, disturbance is allowed only with approval from the city. An Upland Buffer Zone will be considered to have acceptable natural vegetation if it:

(i) is composed of less than 25 percent Weeds;

(ii) is covered by Native Vegetation with less than five percent exposed soil. Exposed soils may exceed 5% in cases where native tree and shrub canopy closure of 75% or greater exists; and

(iii) does not contain maintained turf grass.

(b) Where an Upland Buffer Zone or a portion thereof is not considered acceptable or is to be disturbed, a Upland Buffer Zone landscaping plan must be submitted to the city engineer for approval. At a minimum, the landscaping plan shall include the following information:

(i) A plan sheet that shows the location of the Upland Buffer Zones. The plan sheet must also show Upland Buffer Zones that are considered to be acceptable in their current state and identify them as areas that will not be disturbed during grading. The city shall require silt fencing around these areas in order to protect them from erosion and disturbance during grading and construction. Silt fencing shall be removed promptly following stabilization as described within the city's construction site runoff regulations;

(ii) The species, planting and seeding locations for Upland Buffer Zones that were determined to be unacceptable by the city. This shall involve the seeding or planting of a minimum of at least four species of native grasses and five species of native forbs and a cover crop. The seed mix shall consist of at least fifteen pounds of pure live seed (PLS) per acre and the cover crop shall be at least twenty pounds per acre. If planting is proposed, spacing between plants shall not exceed three feet unless otherwise approved by the city engineer; and

(iii) Detailed specifications that describe sequencing, scheduling, materials, installation and maintenance execution for the seeding, planting, or Weed removal within the Upland Buffer Zones.

(c) In cases where an Upland Buffer Zone landscaping plan is required, the city may require an approved form of a financial guarantee equal to 150 percent of the estimated cost of the vegetation installation. The financial guarantee shall be valid for two years and may be used by the city for compliance inspections and establishment of the required vegetation if not completed by Applicant or if deemed unsuccessful by the city. Vegetation will be deemed by the city to be successful if the area has a minimum of one plant per square foot from the specified seed mix or planting plan and less than twenty-five percent of the area is inhabited by Weeds.

Subd. 9. Maintenance. The property owner or homeowners' association shall be responsible for maintaining the Upland Buffer Zones on the property. Maintenance shall include the following:

(a) Maintain and repair any damage to the Wetland Buffer Zone caused by activities such as mowing, cutting or grading, unless the activities are approved by the city.

(b) Ensure that all soil surfaces in the Wetland Buffer Zone are planted with Native Vegetation and that there is less then five percent of open soil surface which may result in erosion.

Subd. 10. Wetland and Upland Buffer Zone Mitigation. In cases where a Wetland or Upland Buffer Zone alteration is approved by the city and mitigation is required, the

mitigation must result in equal or improved Wetland function and value. The following standards shall apply for any Wetland or Upland Buffer Zone mitigation:

(a) Wetland mitigation shall conform to the requirements of the WCA.

(b) In cases where an approved WCA Permit Application allows Wetland impacts, Upland Buffer Zones shall be required on the fill slope of the impact, but additional fill shall not be permitted to meet the Upland Buffer Zone requirements of this section. Instead, expansion of the Upland Buffer Zone shall be required elsewhere along the edge of the Wetland to meet the overall area of the required buffer.

(c) The area of Upland Buffer Zone required for Wetlands created subject to an approved WCA Permit Application shall meet or exceed the area of Upland Buffer Zone which would have been required by this section for the impacted Wetland.

(d) If wetland banking, as defined within WCA, is proposed subject to an approved WCA Permit Application, the Upland Buffer Zone for the impacted Wetland shall be replaced by purchasing it from a Wetland bank if it cannot be replaced on-site. Replacement of the Upland Buffer Zone on-site is strongly preferred.

(e) Wetland and Upland Buffer Zone plantings that are completed for mitigation shall meet the vegetative standards in this section.

(f) Upland Buffer Zones may be utilized for Wetland mitigation credits if they meet the requirements of the WCA.

Subd. 11. Variance. A variance from the requirements of this section may be granted by the city council in accordance with the variance provisions of the city code, so long as the variance does not violate the WCA or any other applicable state statutes or rules.

Subd. 12. Enforcement.

(a) Investigation. When a violation of this section is either discovered by or brought to the attention of the city, the city shall immediately investigate the situation and document the nature and extent of the violation.

(b) Notice of the Violation. If a violation is found to exist, the city shall notify the offending party of the requirements of this section, all other applicable official controls and the nature and extent of the suspected violation of these controls. If the structure or use is under construction or development, the city may order the construction or development to be immediately stopped until the property is brought into compliance with this section. If the construction or development has already been completed, then the city may issue an order identifying the corrective actions that must be made within a specified time period to bring the use or structure into compliance with this section.

(c) Appeal. The offending party may appeal the city's correction order to the city council. An appeal must be brought in writing no later than ten days from the date of the notice.

(d) Failure to Correct. If the offending party does not correct the work within the specified date on the notice and no appeal has been taken within ten days of the notice, the city may enter the property and perform the corrective work. Any amount incurred by the city in performing the corrective work may be certified by the city to the county for collection with the property taxes.

(e) Penalties. Any person who violates any provision of this section shall be guilty of a misdemeanor and shall be subject to a maximum fine or maximum period of imprisonment, or both, as specified by Minnesota Statutes Section 609.03. Each additional day that the property remains in violation of this section shall constitute an additional violation of this section and may be prosecuted accordingly.

(f) Nothing contained herein shall prevent the city from taking such other lawful action as is necessary to prevent or remedy any violation of this section, including, but not limited to, seeking a civil injunction or restraining order.

Section 828.45. Traffic Control.

Subd. 1. The traffic generated by any use shall be channelized and controlled in a manner that will avoid:

(a) congestion on the public streets,

(b) traffic hazards, and

(c) excessive traffic through residential areas, particularly truck traffic.

Subd. 2. Internal traffic shall be so regulated as to ensure its safe and orderly flow. Traffic into and out of business areas shall in all cases be forward moving with no backing into streets. On corner lots, (including rural areas) nothing shall be placed or allowed to grow with the exception of seasonal crops in such a manner as materially to impede vision between a height of two and one-half (2-1/2) and ten (10) feet above the centerline grades of the intersecting streets to a distance such that a clear line of vision is possible of the intersection street from a distance of fifty (50) feet from the intersection of the right-of-way lines.

Section 828.47. Vacated Streets. Whenever any street, alley, easement or public way is vacated by official action, the zoning district abutting the centerline of the said vacated area shall not be affected by such proceeding.

Section 828.49. Agricultural Operations. All agricultural land uses shall be a permitted use where the operator can conduct a farming operation. The City Council may require any farm operation to

CHAPTER 7.

PUBLIC AND PRIVATE UTILITIES

747. STORM WATER ILLICIT DISCHARGE AND ILLICIT CONNECTIONS TO THE STORM SEWER SYSTEM

Section 747.01 Storm Water Illicit Discharge and Illicit Connections to the Storm Sewer System

Subd. 1. Intent. To promote the health, safety and general welfare of the citizens of Medina by requiring illicit discharge management practices for all discharge activities.

Subd. 2. Statutory Authorization. This ordinance is adopted pursuant to Minnesota Statutes Section 462.351.

Subd. 3. Findings. The city council hereby finds that non-storm water discharges to the city's municipal separated storm sewer system are subject to higher levels of pollutants. These pollutants can enter into receiving water bodies which adversely affect the public health, safety and general welfare by impacting water quality, creating nuisances, impairing other beneficial uses of environmental resources and hindering the ability of the city to provide adequate water, sewage treatment, flood control and other community services.

Subd. 4. Purpose. The purpose of this section is to promote, preserve and enhance the natural resources within the city by protecting these resources from adverse effects occasioned by non-storm water discharges by regulating discharges that would have an adverse and potentially irreversible impact on water quality and environmentally sensitive land.

Subd. 5. Definitions. The following terms shall have the meanings given to them unless another meaning is clear from the context:

(a) "Best management practices" or "BMPs" means sediment and erosion control and stormwater management practices used to mitigate adverse effects of land use activities, runoff, sedimentation and non-point source pollution on stream bank erosion, stream hydrology and surface and groundwater replenishment.

(b) "Discharge" means adding, introducing, releasing, leaking, spilling, casting, throwing or emitting any pollutant or placing any pollutant in a location where it is likely to pollute any waters of the state located in the city.

(c) "Erosion" means the process by which ground surface is worn away by action of wind, water, ice or gravity.

(d) "Groundwater" means water contained below the surface of the earth in the saturated zone, including, but not limited to, all waters whether under-confined, unconfined, or perched conditions, in near surface unconsolidated sediment or regolith or in rock formations deeper underground.

(e) "Illicit connection" is defined as either of the following:

(i) Any drain or conveyance, whether on the surface or subsurface, which allows an illicit discharge to enter the storm sewer system including any non-storm water discharge including sewage, process wastewater or wash water and any connections to the storm sewer system from indoor drains and sinks, regardless of whether said drain or connection had been previously allowed, permitted, or approved by an authorized enforcement agency; or

(ii) Any drain or conveyance connected from a residential, commercial or industrial land use to the storm sewer system which has not been documented in plans, maps, or equivalent records or approved by an authorized enforcement agency.

(f) "Illicit discharge" means any direct or indirect non-storm water discharge to the storm sewer system, except as exempted in subdivision 8 of this section.

(g) "MPCA" means the Minnesota Pollution Control Agency.

(h) "NPDES" means the National Pollutant Discharge Elimination System, the program for issuing, modifying, revoking, reissuing, terminating, monitoring, and enforcing permits pursuant to Sections 301, 318, 402 and 405 of the Clean Water Act (33 C.F.R. §§ 1317, 1328, 1342, and 1345), authorizing the discharge of pollutants to waters of the United States.

(i) "Person" means any individual, firm, corporation, partnership, franchise, association or governmental entity.

(j) "Pollutant" means any substance which, when discharged has the potential to or does interfere with state designated water uses; obstructs or causes damage to waters of the state; changes water color, odor, or usability as a drinking water source through causes not attributable to natural stream processes affecting surface water or subsurface processes affecting groundwater; adds an unnatural surface film to the water; adversely changes other chemical, biological, thermal, or physical conditions in any surface water or stream channel; degrades the quality of groundwater; or harms human life, aquatic life, terrestrial plant or wildlife. Pollutants include, but are not limited to, dredged soil, solid waste, incinerator residue, garbage, wastewater, wastewater sludge, chemical waste, biological materials, radioactive materials, rock, sand, dust, industrial waste, sediment, nutrients, toxic substances, pesticides, herbicides, trace metals,

automotive fluids, petroleum-based substances and oxygen-demanding materials.

(k) "Pollute" means to discharge pollutants into the waters of the state.

(l) "Pollution" means the direct or indirect distribution of pollutants into the waters of the state.

(m) "State designated water uses" means uses specified in the State of Minnesota water quality standards.

(n) "Storm sewer system" means a conveyance or system of conveyances that is owned and operated by the city or other entity and designed or used for collecting or conveying storm water.

(o) "Storm water" means precipitation runoff, storm water runoff, snow melt runoff, and any other surface runoff and drainage or as otherwise defined by Minnesota Rule 7077.0105, subpart 41(b).

(p) "Surface water" means all waters of the state other than groundwater, which includes, but is not limited to, ponds, lakes, rivers, streams, tidal and nontidal wetlands, public ditches, tax ditches and public drainage systems except those designated and used to collect, convey or dispose of sanitary sewage.

(q) "Waters of the state" means all streams, lakes, ponds, marshes, watercourses, waterways, wells, springs, reservoirs, aquifers, irrigation systems, drainage systems and all other bodies or accumulations of water, surface or underground, natural or artificial, public or private, which are contained within, flow through, or border upon the state or any portion thereof or as otherwise defined in by Minnesota Statutes Section 115.01, subdivision 22.

Subd. 6. Administration. The city engineer and his or her authorized representatives are authorized to administer, implement and enforce the provisions of this section.

Subd. 7. Illegal Disposal and Dumping of Substances and Materials.

(a) No person shall throw, deposit, place, leave, maintain, or keep any substance upon any street, alley, sidewalk, storm drain, inlet, catch basin conduit or drainage structure, business place or upon any public or private plot of land, so that the same might be or become a pollutant, except if secured within a container or bag or contained within a lawfully established waste disposal facility.

(b) No person shall intentionally dispose of grass, leaves, dirt or landscape material into a water resource, buffer, street, road, alley, catch basin, culvert, curb, gutter, inlet, ditch, natural watercourse, flood control channel, canal, storm drain or any fabricated natural conveyance.

Subd. 8. Illicit Discharges and Connections to the Storm Sewer System.

(a) No person shall cause any illicit discharge to enter the storm sewer system or any surface water unless such discharge:

(i) Consists of non-storm water that is authorized by an NPDES point source permit obtained from the MPCA;

(ii) Is associated with fire fighting activities or other activities necessary to protect public health and safety; or

(iii) Is one of the following exempt discharges: water line flushing or other potable water sources; landscape irrigation or lawn watering; diverted stream flows; rising groundwater; groundwater infiltration to a storm drain; uncontaminated pumped groundwater; foundation or footing drains (not including active groundwater dewatering systems); crawl space pumping; air conditioning condensation; springs; non-commercial washing of vehicles; natural riparian habitat or wetland flow; emptying of dechlorinated swimming pools; and any other water discharge that does not contain a pollutant.

(b) Dye testing is an allowable discharge. Verbal notification to the city at least 48 hours prior to the time of the test is required.

(c) No person shall use any illicit connection to intentionally convey non-storm water to the storm sewer system.

(d) No person shall connect or convey water from floor drains to the storm sewer system.

(e) The construction, use, maintenance or continued existence of illicit connections to the storm sewer system is prohibited. This prohibition expressly includes, but is not limited to, illicit connections made in the past, regardless of whether the connection had been previously allowed, permitted, or approved by an authorized enforcement agency.

(f) No person shall connect a line conveying sewage to the storm sewer system, or allow such a connection to continue.

Subd. 9. Discharge Prevention Requirements. Any owner or occupant of property within the city shall comply with the following requirements to prevent discharges:

(a) No person shall leave, deposit, discharge, dump, or otherwise expose any chemical or septic waste in an area where discharge to a street or the storm sewer system may occur. This prohibition shall apply to both actual and potential discharges.

(b) Individual sewage treatment systems must be maintained in order to prevent failure, which has the potential to pollute surface water. No part of any individual sewage treatment system requiring on-land or in-ground disposal of waste shall be located in an area where effluent could immediately or gradually reach a body of water due to the existing physical characteristics of the site or the system.

(c) Recreational vehicle sewage shall be disposed of at a proper sanitary waste facility. Waste must not be discharged in an area where drainage to streets or storm sewer system may occur.

(d) Water in swimming pools must sit for seven days without the addition of any chlorine to allow for evaporation of the chlorine before it is discharged.

(e) Runoff of water from residential properties shall be minimized to the maximum extent practicable. Runoff of water from the washing down of paved areas on commercial or industrial properties is prohibited unless necessary for health or safety purposes and is not in violation of any other applicable regulations.

(f) Mobile washing companies, such as carpet cleaning and mobile vehicle washing services, shall dispose of any wastewater to the sanitary sewer system. Wastewater shall not be discharged to the streets or storm sewer system.

(g) Objects such as motor vehicle parts that contain grease, oil or other hazardous substances and unsealed receptacles containing hazardous materials shall not be stored in areas susceptible to runoff. Any machinery or equipment that is to be repaired or maintained in areas susceptible to runoff shall be placed in a confined area to contain any leaks, spills, or discharges.

(h) Debris and residue shall be removed, as required below:

(i) All motor vehicle parking lots and private streets shall be swept, at a minimum of once a year in the spring to remove debris. Such debris shall be collected and be disposed of properly.

(ii) Fuel and chemical residue or other types of potentially harmful material, such as animal waste, garbage or batteries shall be removed as soon as possible and disposed of properly. Household hazardous waste must be disposed of through the county collection program or at any other authorized disposal site. Household hazardous waste shall not be placed in a trash container.

Subd. 10. Industrial Activity Discharges to the Storm Sewer System.

(a) Any person subject to an industrial activity NPDES storm water discharge permit shall comply with all provisions of such permit. Proof of compliance with said

permit may be required in a form acceptable to the city prior to the allowing of discharge to the storm sewer system.

(b) All facilities that have storm water discharges associated with industrial activity must adhere to the following requirements: Any person responsible for a property or premise, which is, or may be, the source of an illicit discharge, may be required to implement, at said person's expense, additional structural and non-structural BMPs to prevent the further discharge of pollutants to the storm sewer system. These BMPs shall be part of a storm water pollution prevention plan (SWPPP) as necessary for compliance with requirements of the NPDES permit.

Subd. 11. Notification of Spills. Notwithstanding other requirements of law, as soon as any person responsible for a facility or operation, or responsible for emergency response for a facility or operation has information of any known or suspected release of materials which are resulting or may result in illegal discharges or pollutants discharging into the storm sewer system, or waters of the state, said person shall take all necessary steps to ensure the discovery, containment and cleanup of such release. In the event of such a release of hazardous materials, said person shall immediately notify emergency response agencies of the occurrence via emergency dispatch services. In the event of a release of non-hazardous materials, said person shall notify the city no later than the next business day.

Subd. 12. Access to Buildings for Inspection, Sampling, Dye Testing and Examination Related to Storm Water Discharge.

(a) The city must be permitted to enter and inspect all buildings under this section as often as may be necessary to determine compliance with this section and for the purposes of sampling, dye testing and examinations that relate to the discharge of storm water. If a person does not wish to allow the city to enter a building to conduct the required activity, he or she may retain a private inspector to conduct the activity. The private inspector must have credentials that are acceptable to the city. The private inspector shall provide the city with the relevant samples, test results, reports or any other information that is being requested.

(b) Upon the request of the city, the discharger must provide the city with copies of records that relate to the discharge of storm water.

(d) The city may require the discharger to install monitoring equipment or other such devices as necessary to conduct monitoring, sampling or dye testing of the facility's storm water discharge.

(e) If the city has been refused access to any part of the premises from which storm water is being discharged, and is able to demonstrate probable cause to believe that there may be a violation of this section, or that there is a need to inspect, test, examine or sample as part of a routine program designed to verify compliance with this section or any order issued hereunder, or to protect the overall public

health, safety, and welfare of the community, then the city may seek issuance of an administrative search warrant from any court of competent jurisdiction.

Subd. 13. Suspension of Storm Sewer System Access.

(a) The city may, without prior notice, suspend storm sewer system discharge access to a person when such suspension is necessary to stop an actual or threatened discharge which presents or may present an imminent and substantial danger to the environment; to the public health or welfare; to the storm sewer system; or to the waters of the state. If the violator fails to comply with a suspension order issued in an emergency, the city may take such steps as deemed necessary to prevent or minimize damage to the storm sewer system or waters of the state, or to minimize danger to the public.

(b) Any person discharging to the storm sewer system in violation of this section may have his or her storm sewer system access terminated if such termination will abate or reduce an illicit discharge. No person shall reinstate the storm sewer system access to premises terminated pursuant to this section without the prior approval of the city.

Subd. 14. Enforcement.

(a) Notice of Violation. Whenever the city finds that a person has violated a prohibition or failed to meet a requirement of this section, the city may order compliance by sending written notice of the violation to the responsible person. Such notice may require without limitation:

(i) The performance of monitoring, analyses and reporting;

(ii) The elimination of illicit connections or discharges;

(iii) Discharges, practices, or operations in violation of this section to cease and desist;

(iv) The abatement or remediation of storm water pollution or contamination hazards and the restoration of any affected property; and

(v) The implementation of source control or treatment BMPs.

(b) The offending party may appeal the city's notice to the city council. An appeal must be brought in writing no later than 10 days from the date of the notice.

(c) If abatement of a violation or restoration of affected property is required, the notice shall set forth a deadline within which such remediation or restoration must be completed. Said notice shall further advise that, should the offending party fail to remediate or restore within the established deadline, the work will be done by a

designated governmental agency or a contractor and the expense thereof will be charged to the offending party.

(d) In the event that the abatement or restoration work is performed by the city, the city may charge the violator for its costs and expenses associated with the work. If the bill received for abatement or restoration is not paid within 30 days, the city may draw the amount of the bill from any financial guarantees that the city may be holding or may certify the amount to the county for collection with the property taxes.

Subd. 15. Penalty. Any person who violates any provision of this section shall be guilty of a misdemeanor and shall be subject to a maximum fine or maximum period of imprisonment, or both, as specified by Minnesota Statutes Section 609.03. Each additional day that the property remains in violation of this section shall constitute a separate violation of this section and may be prosecuted accordingly. Nothing contained herein shall prevent the city from taking such other lawful action as is necessary to prevent or remedy any violation of this section, including, but not limited to, seeking a civil injunction or a restraining order.

Amendment History of this Section

Adopted June 17, 2008 (Ord. 445). *A storm water illicit discharge and illicit connections to the storm sewer system ordinance was established under Section 747.01.*

SITE PLAN REVIEW

Section 825.55. Site Plan Review – Application.

Subd. 1. All new commercial, business, and multiple family residential uses and developments shall require site plan review under this section prior to the issuance of any permits. In addition, all changes, additions and expansions of existing commercial, business, and multiple family residential uses and developments shall require site plan review prior to the issuance of any permits unless the change, addition or expansion qualifies for review by city staff as a minor change pursuant to Subd. 4 of this Section.

Subd. 2. The owner or developer shall submit an application for site plan review to the zoning administrator. The application shall be accompanied by the following information and documentation to the extent it is not otherwise required by another land use application made by the owner or developer for the same site at the same time:

(a) legal description of the property;

(b) identification of developer and owner, if different;

(c) survey showing property boundaries; existing improvements, including utilities, drainage tiles and wells; topography of the site and area within 100 feet of the property boundaries with contours at 2-foot intervals; significant trees and existing vegetation which would meet ordinance landscaping requirements; easements of record, including the dimensions thereof; and wetlands;

(d) site plan of proposed improvements showing all buildings, including details of loading docks; parking areas; driveways; access points; berms; easements; and adjacent public or private streets;

(e) floor plans and building elevations, including list of building materials, showing a sketch or computer-generated image of proposed buildings as viewed from surrounding uses;

(f) site plan of existing uses on property in non-residential zones adjacent to the site and on property in residential zones within 720 feet of the site, measured at the closest point, showing buildings, including loading docks, entrances and other significant features and illustrating sight lines to proposed uses;

(g) proposed grading plan with contours at 2-foot intervals;

(h) soils map;

(i) tree preservation plan;

(j) landscaping plan, including species and sizes;

(k) drainage and storm water plan;

(l) utility plan;

(m) sign plan;

(n) lighting plan;

(o) table of all proposed uses by type and square footage, including estimated water and sanitary sewer usage;

(p) schedule of staging or timing of development; and

(q) application fee.

Upon receipt of an application for site plan review, the zoning administrator may determine that, due to the nature or scale of the development, not all of the above information must be submitted or that additional information must be submitted in order to allow reasonable review of the development.

Subd. 3. Upon receipt of an application for site plan review, the zoning administrator shall determine whether the application is complete. If the application is not complete, the zoning administrator shall notify the applicant in writing that the application is not complete and shall specify the additional documentation or information that the applicant will be required to submit before the application will be considered complete. When the application is complete, the zoning administrator shall refer the matter to the planning commission for review.

Subd. 4. Minor changes:

(a) The following changes may be reviewed and approved by the zoning administrator or their designee upon a written finding and filing the report in the property file that the proposal meets the requirements of the district and is in compliance with the relevant ordinance standards. The zoning administrator may determine that review of minor changes by the Planning Commission and City Council is required if deemed appropriate based upon the nature of the changes. Review by the Planning Commission and City Council shall be required if made in connection with another request which requires review, including but not limited to conditional use permits, subdivisions, and variances.

1. Change in the use of the property if the proposed use complies with relevant ordinance standards.
2. Expansion of an existing building, provided the proposed expansion complies with relevant ordinance standards and does not exceed the greater of the following amounts in a single year:
   (a) 10% of the existing floor area, or
   (b) 1,000 square feet of floor area.

3. Changes to the exterior walls or surface of the building, if the proposed exterior surface complies with relevant ordinance standards.
4. Expansion(s) of an existing parking lot which complies with relevant ordinance standards and which do(es) not cumulatively exceed the greater of the following amounts within a consecutive 24-month period:
   (a) 25% of the existing parking lot area; or
   (b) 10,000 square feet.
5. Outdoor lighting changes provided the new lighting complies with relevant ordinance standards, including maximum output or photometric requirements.
6. Changes to the topography involving less than 1,000 cubic yards of disturbance, provided such changes comply with relevant ordinance standards.
7. An addition to exposed rooftop equipment if the addition is less than 64 cubic feet and complies with relevant ordinance standards.
8. Construction of an accessory structure which complies with relevant ordinance standards and which does not exceed the lesser of the following:
   (a) 20% of the floor area of the principal structure; or
   (b) 1,000 square feet of floor area.

(b) A request for site plan review of minor changes shall include all information described in 825.55 Subd. 2, including relevant City fees.

(c) Any person aggrieved by a decision of the staff under this subdivision may appeal to the city council. Appeals must be submitted in writing and must be received by the staff within 30 days of the date the staff's written report is filed. The city council shall decide an appeal within 60 days of the date of receipt of the appeal.

Section 825.56. Site Plan Review - Planning Commission Review.

Subd. 1. Except as provided in Section 825.55, Subd. 4, the planning commission shall review the proposed site plan on the basis of the information and documentation submitted by the applicant and any other information available to it. The review may occur separately or in conjunction with any other city hearing or review required under state statute, this ordinance or other applicable law regarding the same property or development and occurring at the same time.

Subd. 2. Except as provided in Section 825.55, Subd. 4, the planning commission shall review the proposed site plan to determine whether it is consistent with the requirements of this ordinance, including the applicable development standards and the purpose of the zoning district in which the property is located. Following the review, the planning commission shall recommend that the site plan be approved, approved with conditions or denied. The planning commission shall forward its recommendation to the city council.

Section 825.59. Site Plan Review - City Council Review.

Subd. 1. Except as provided in Section 825.55, Subd. 4, the city council shall consider the recommendation of the planning commission after receipt of its report and may consider any additional information or conduct such additional review, if any, as it determines would serve the public interest. The city council shall make its decision to approve, approve with conditions or deny the site plan. The city council may condition its approval in any manner it deems reasonably necessary in order to promote public health, safety or welfare, to

achieve compliance with this ordinance, or to accomplish the purposes of the district in which the property is located.

Subd. 2. Any site plan approval granted by the city council shall be valid for a period of one year following final action by the city council or such longer period, not to exceed one additional year, as the council may specify. After the expiration of that period, the approval granted by the city council shall be null and void and no permits may be issued pursuant to the approval. Prior to the expiration of the period, the city council may grant an extension for good cause upon Medina City Code written request by the applicant.

Subd. 3. An application to amend an approved site plan shall be reviewed under this section in the same manner as an initial application for a site plan review except that any change, addition or expansion which qualifies as a minor change as specified in the standards applicable for the district in which the property is located shall be subject to an administrative site plan review by the zoning administrator.

APPENDIX E

Water Quality Monitoring Data

Mooney Lake (DNR ID 27-0134-00)

MCWD Site ID: LMO02
GPS Coordinate: 44.832N, -93.698W
Located in the city of Plymouth
Surface Area (acres): 118
Max. Depth (ft): 10

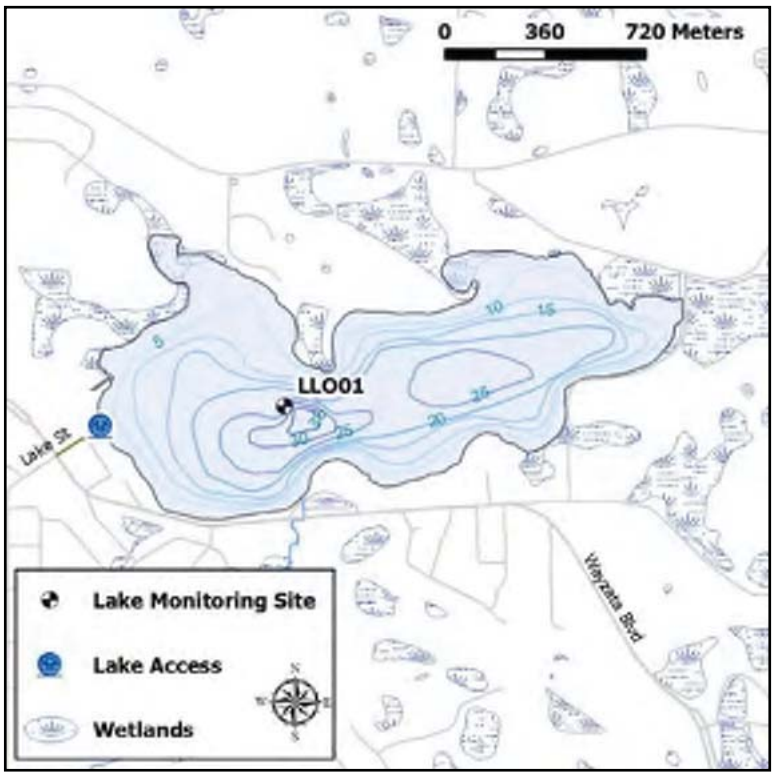

Figure 10.6 Mooney Lake

Directions

There is currently no public access on Mooney Lake. A city park path at 2350 Brockton Lane leads to the lake and is located on the NE corner.

Site Information

Mooney Lake is a dimictic class 2B lake protected for aquatic life and recreation. MCWD staff has been monitoring the lake once a month from May through September since 2006. Surface samples were collected and the parameters analyzed include: total phosphorus (TP), and chlorophyll-*a*. Measurements of Secchi disc depth were also recorded.

2007 Data Summary

- Secchi disc depth declined throughout the season and was below the standard (1.2 m) for all but the initial measurement taken in late May.

- Chlorophyll-*a* concentrations increased from May to August and were above the standard (15 ppb) for all samples.

- TP concentrations also increased throughout the season and were above the standard (40 ppb) for all samples.

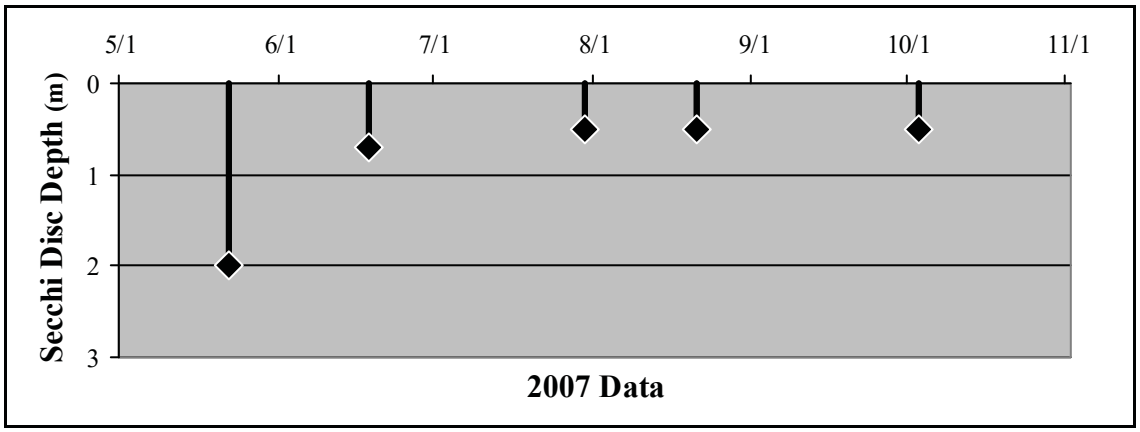

a.

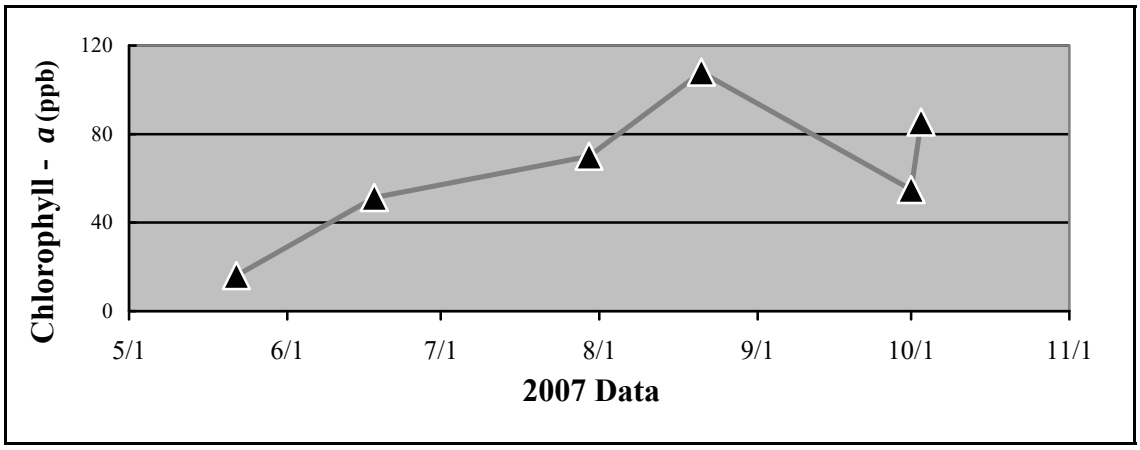

b.

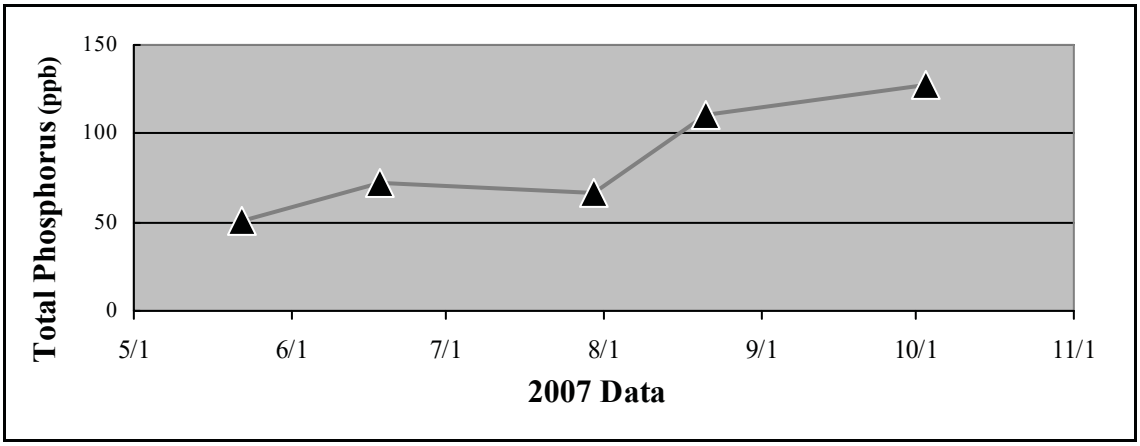

c.

Figure 10.7 (a-c) Mooney Lake
2007 Grade: D

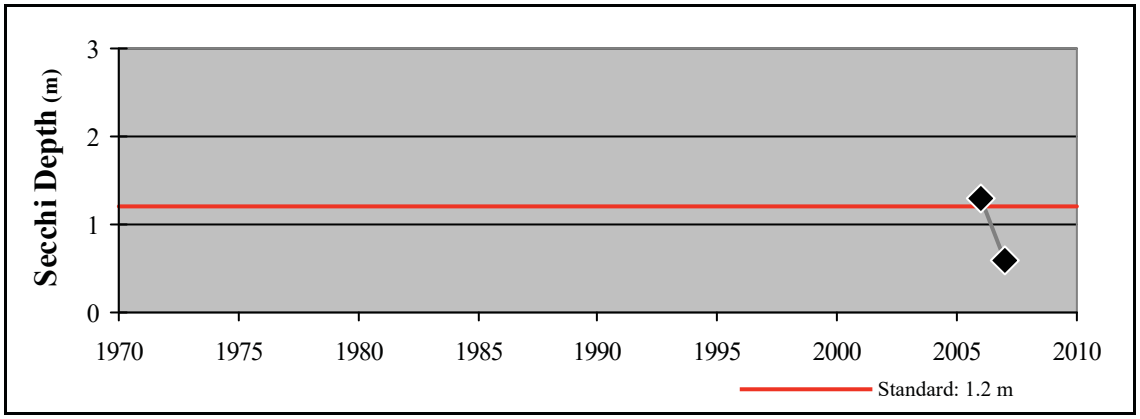

d.

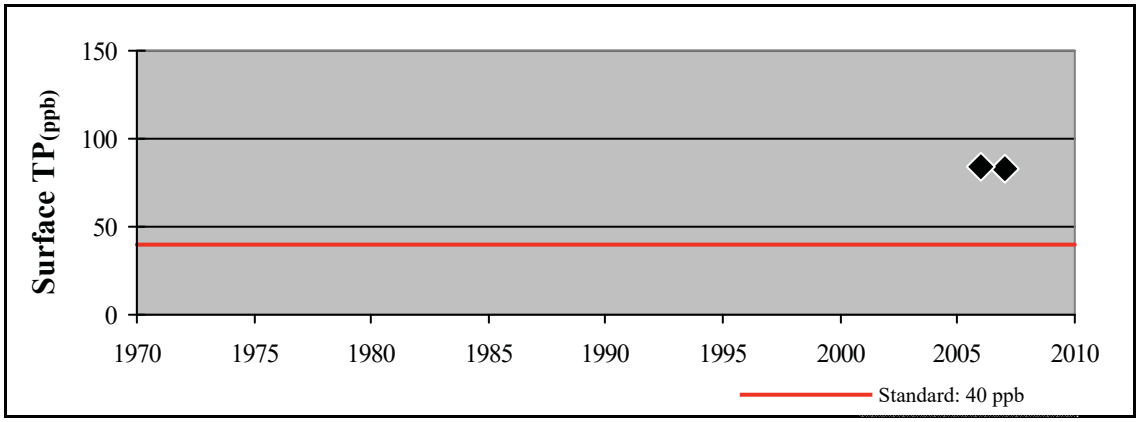

e.

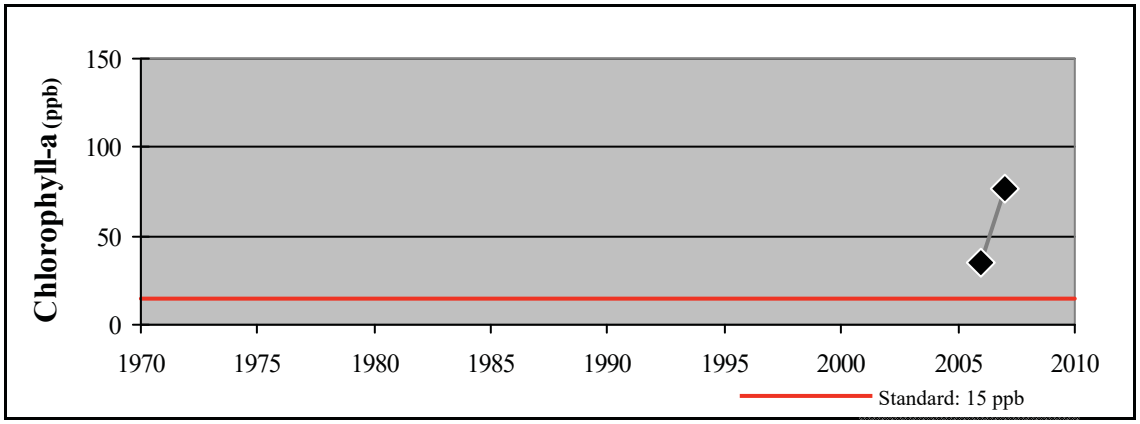

f.

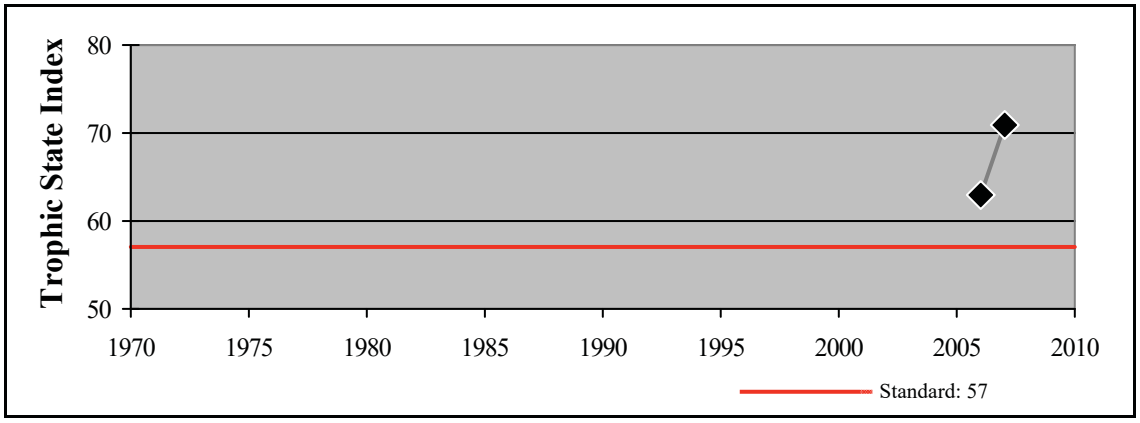

g.

Figure 10.7 (d - g) Mooney Lake - Summer Mean Values

Lake Katrina (27-0154-00)

MCWD Site ID: LKA01
Sample Location GPS Coordinates: 45.011N, -93.624W

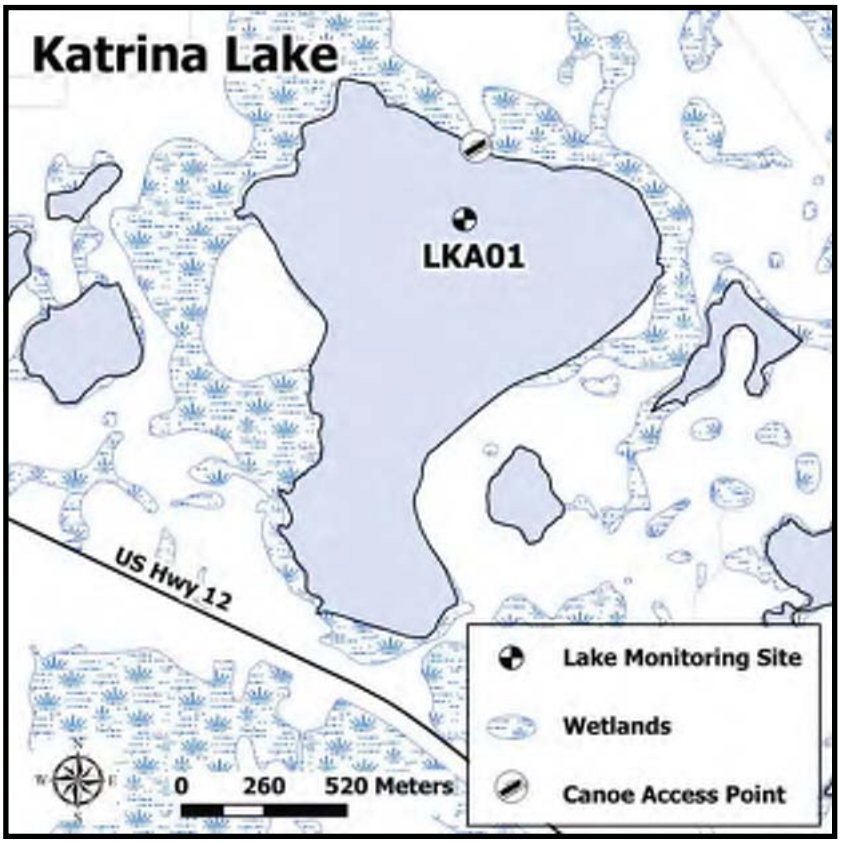

Figure 9.2 Lake Katrina

Directions

There is currently no open public access to Lake Katrina. It is located just north of Hwy 12 in Maple Plain and can be accessed through Baker Park Reserve. Three Rivers Parks District maintains a canoe landing on the northern side of the lake, which can be accessed through a gated road.

Site Information

Lake Katrina is a polymictic class 2B lake protected for aquatic life and recreation. MCWD staff has been monitoring the lake once a month from May through September since 2006. Surface samples were collected and the parameters analyzed include: total phosphorus (TP), and chlorophyll-*a*. Measurements of Secchi disc depth were also recorded.

2007 Data Summary

- Secchi disc depth increased through the season surpassing the standard (1.2 m) in late August.
- Chlorophyll-*a* concentrations decreased throughout the season shifting dramatically above and below the standard (15 ppb).
- TP concentrations were initially very high before dropping in mid-June to just above the standard (40 ppb).

Table 9.1 Lake Katrina 2007 Summary

2007 Summer (May-September) Water Quality Summary				
Parameter	**Range**	**Mean**	**Grade**	**TSI value ***
Secchi Depth (m)	0.4 - 1.2	1.1	D	59
Surface TP (µg/L)	44 - 175	50.3	D	61
Chlorophyll-*a* (µg/L)	3.2 - 82.2	20.5	C	60
		Overall Score	**D+**	**60**

**excludes May Data*

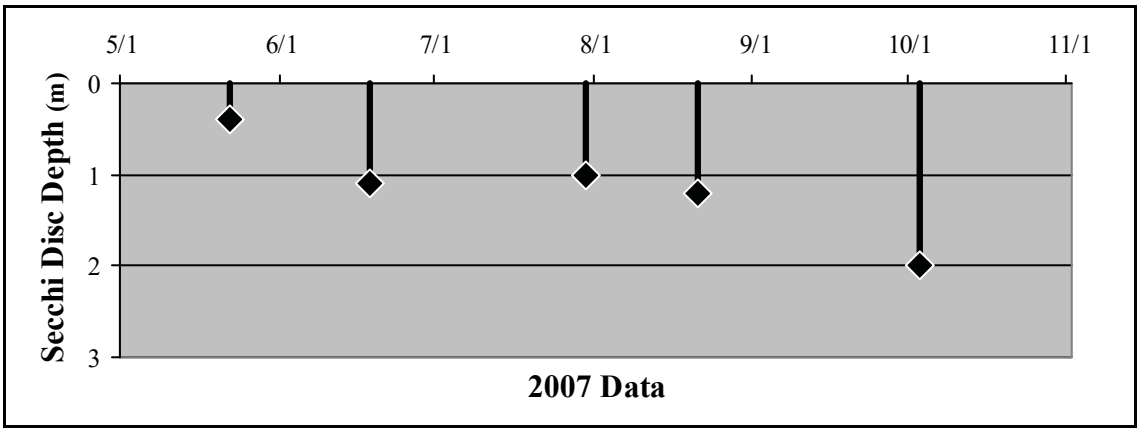

a.

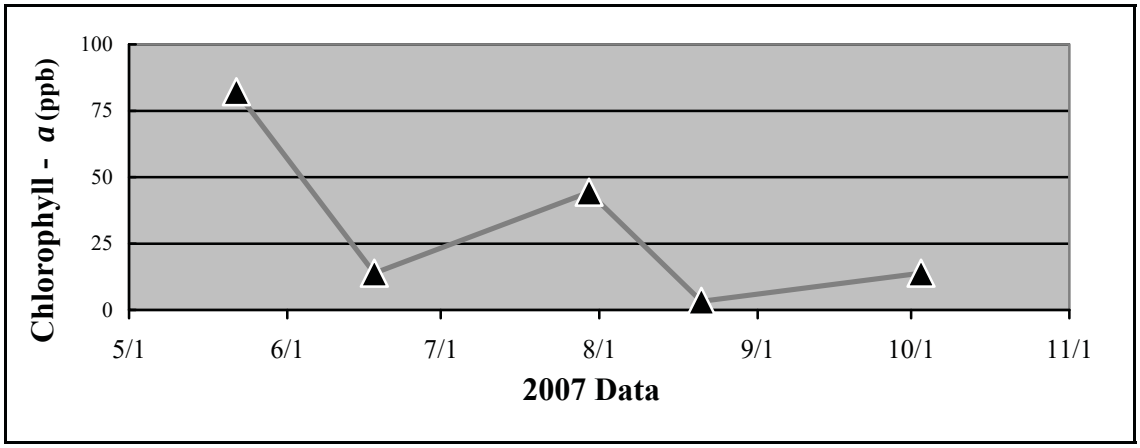

b.

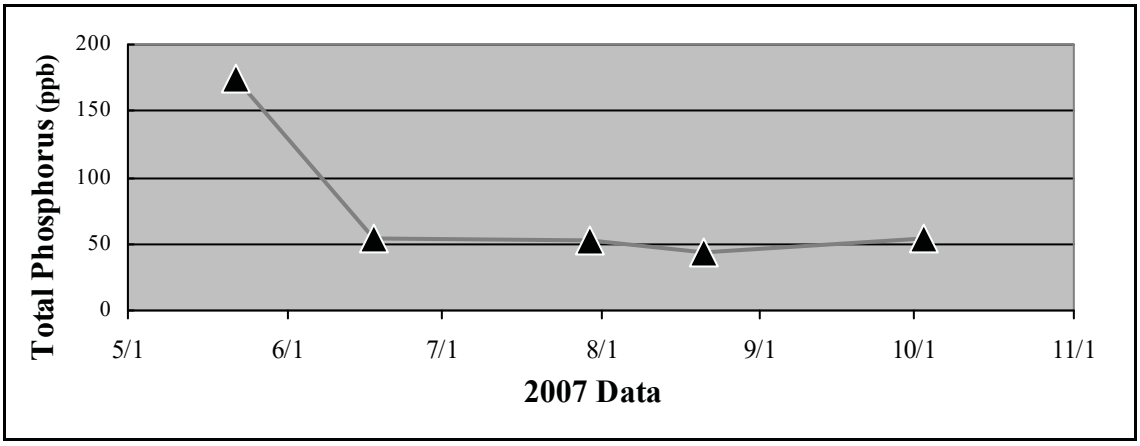

c.

Figure 9.3 (a-c) Lake Katrina
2007 Grade: D

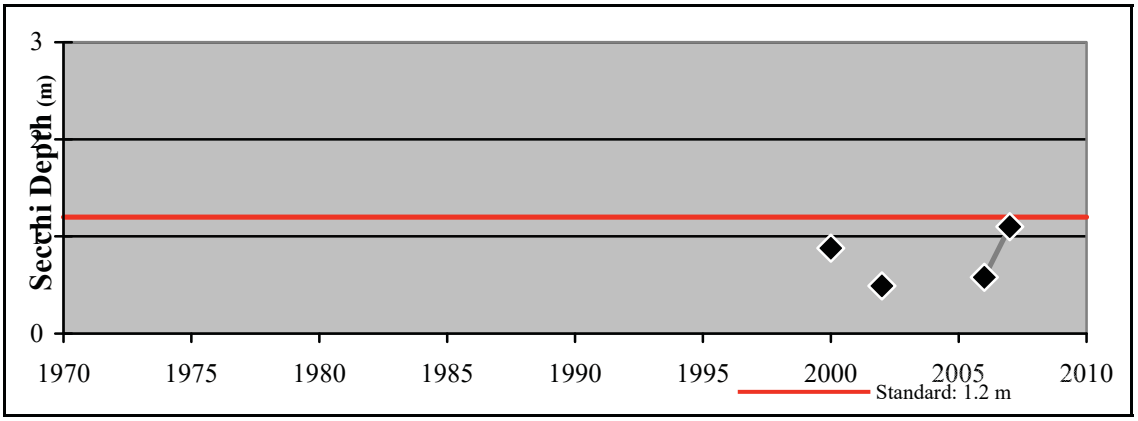

d.

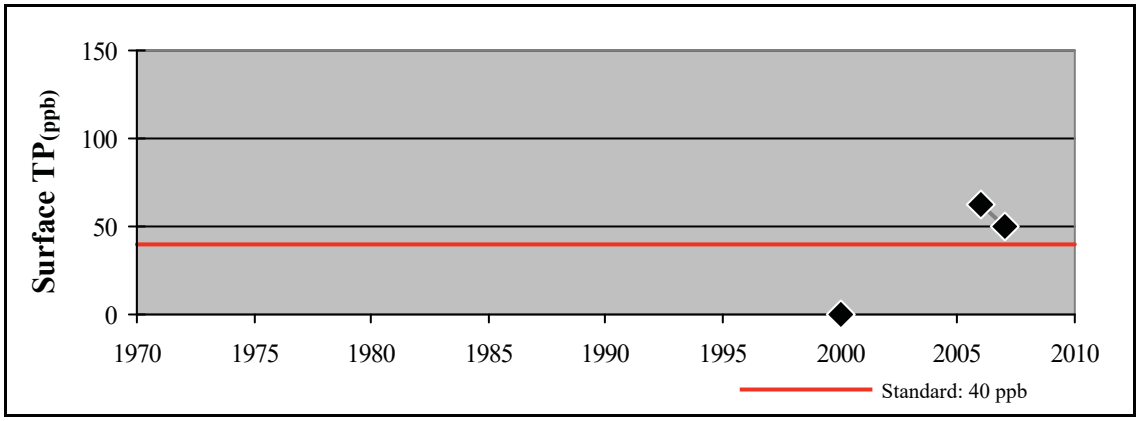

e.

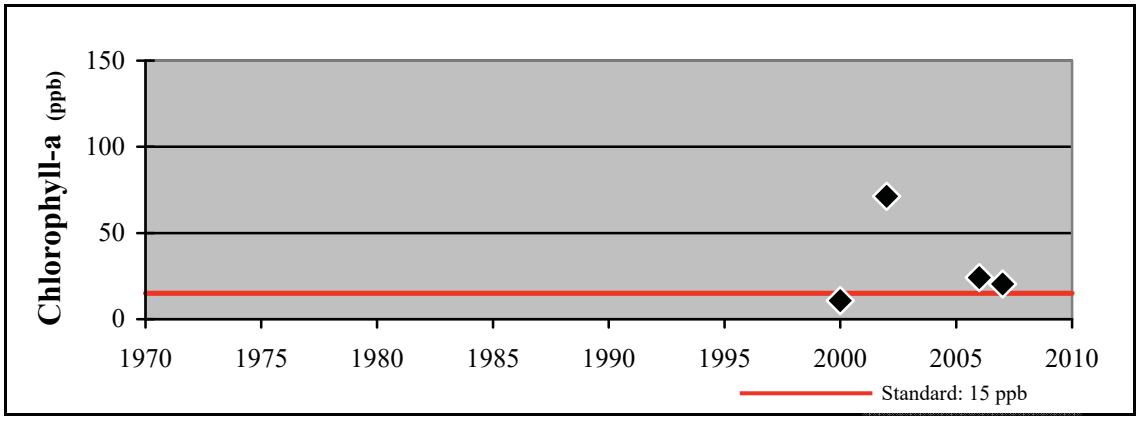

f.

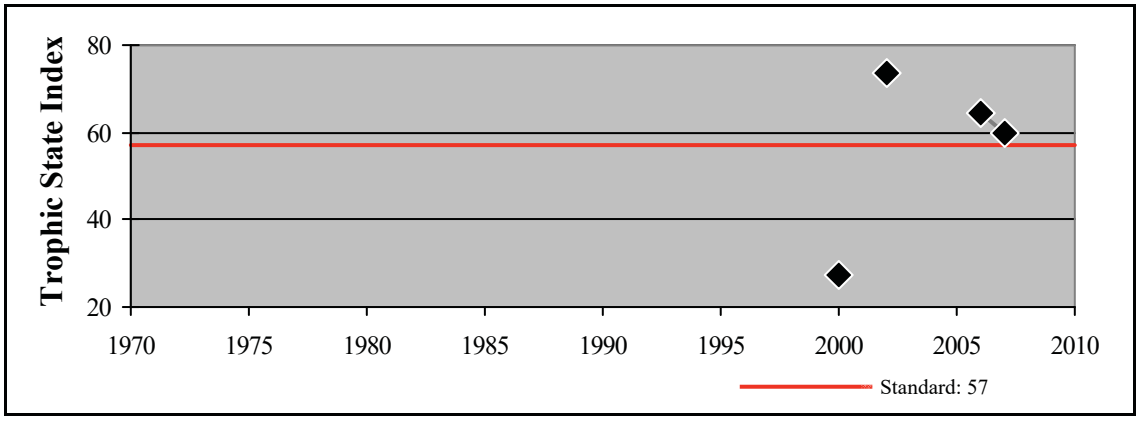

g.

Figure 9.3 (d - g) Lake Katrina - Summer Mean Values

Holy Name Lake (DNR ID 27-0158-00)

MCWD Site ID: LHN01
Sample Location GPS Coordinates: 44.832N, -93.698W
Surface Area (acres): 65
Max. Depth (ft): 7

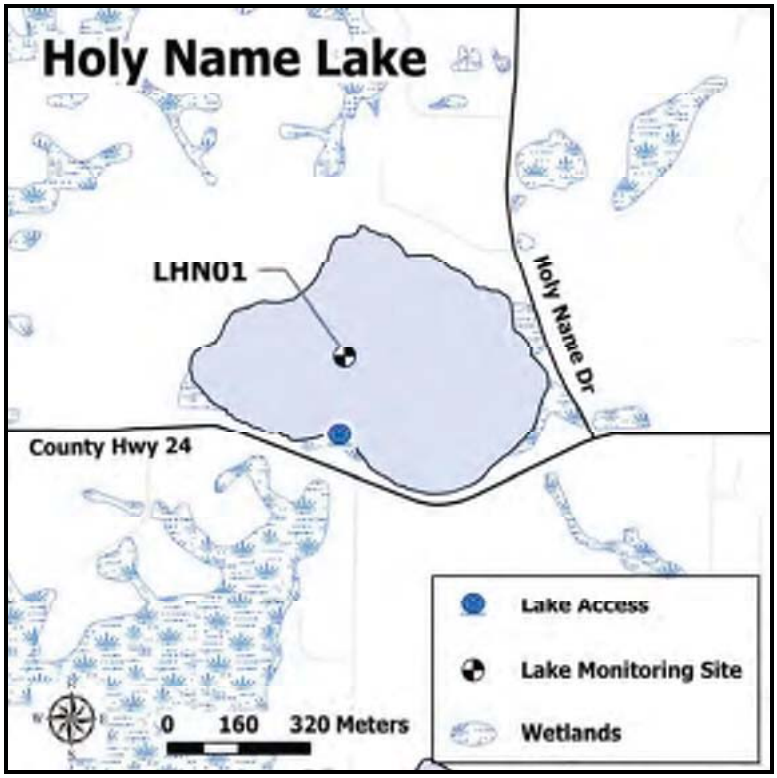

Figure 10.4 Holy Name Lake

Directions

Take Country Road 24 west from Hwy 101 in Plymouth a mile and a half. The lake access is around a blind curve at Holy Name Park and is not maintained. It is suitable for canoe and Kayak entry.

Site Information

Holy Name Lake is a polymictic class 2B Shallow lake protected for aquatic life and recreation. MCWD staff has been monitoring the lake once a month from May through September since 2006. Surface samples were collected and the parameters analyzed include: total phosphorus (TP), and chlorophyll-*a*. Measurements of Secchi disc depth were also recorded.

2007 Data Summary

- Secchi disc depth declined throughout the season and was below the standard (1.2 m) for all but the initial measurement taken in late May.

- Chlorophyll-*a* concentrations increased throughout the season and were above the standard (15 ppb) for all but the initial sample.

- TP concentrations increased through July with peak concentrations well over the standard (40 ppb). The remainder of the season saw declining concentrations still above the standard.

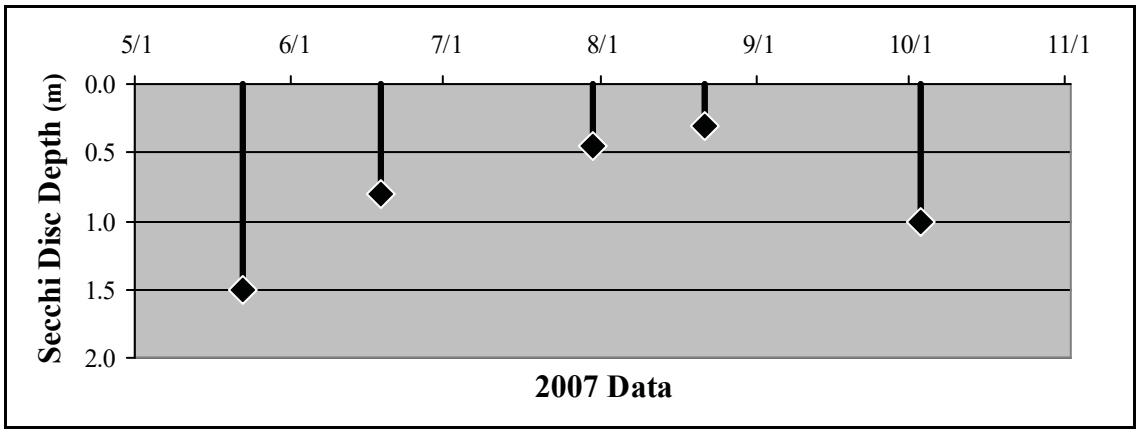

a.

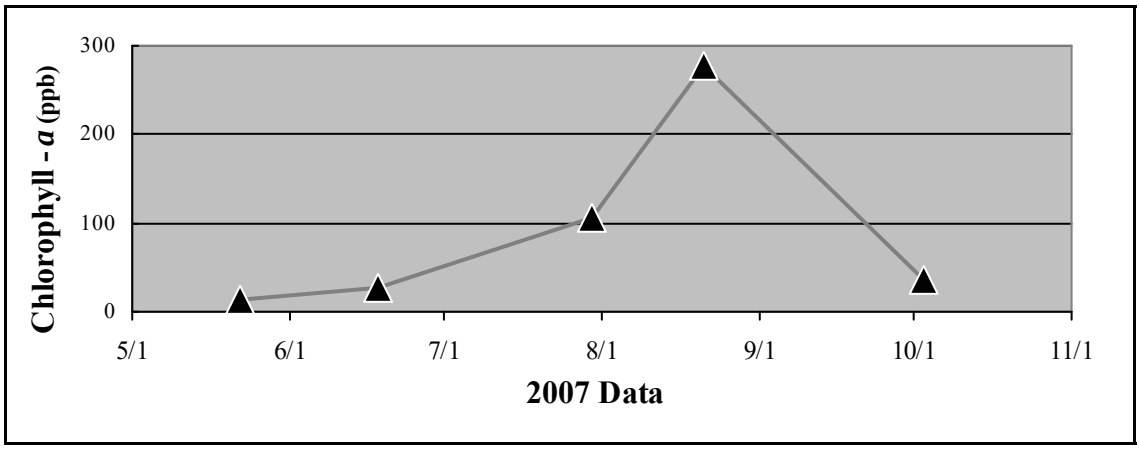

b.

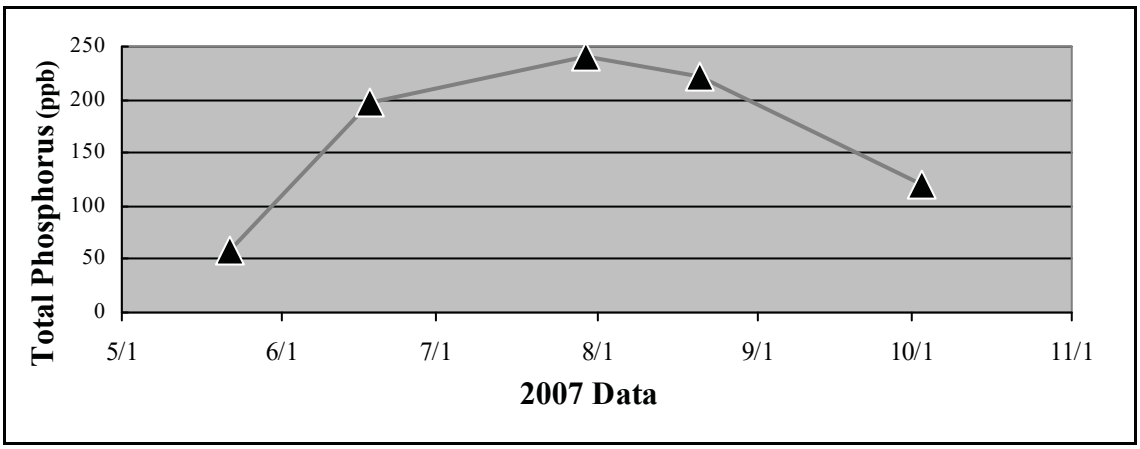

c.

Figure 10.5 (a-c) Holy Name Lake
2007 Grade: F

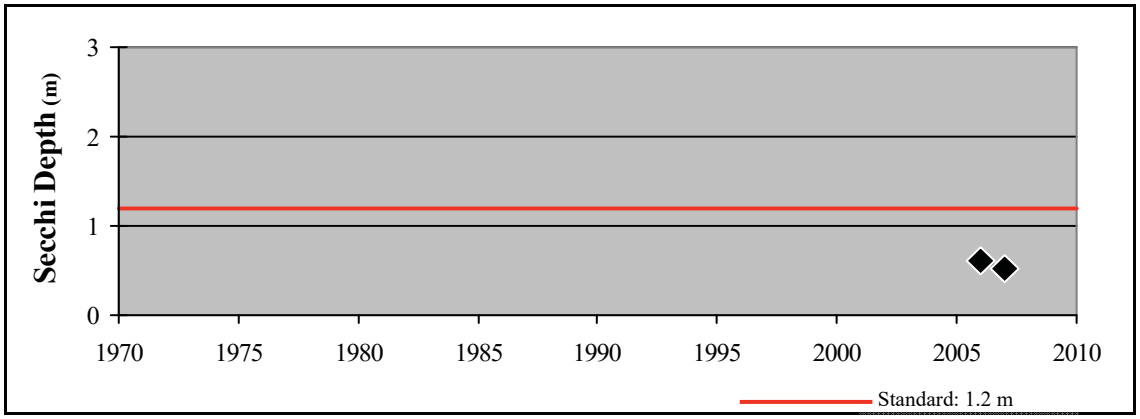

d.

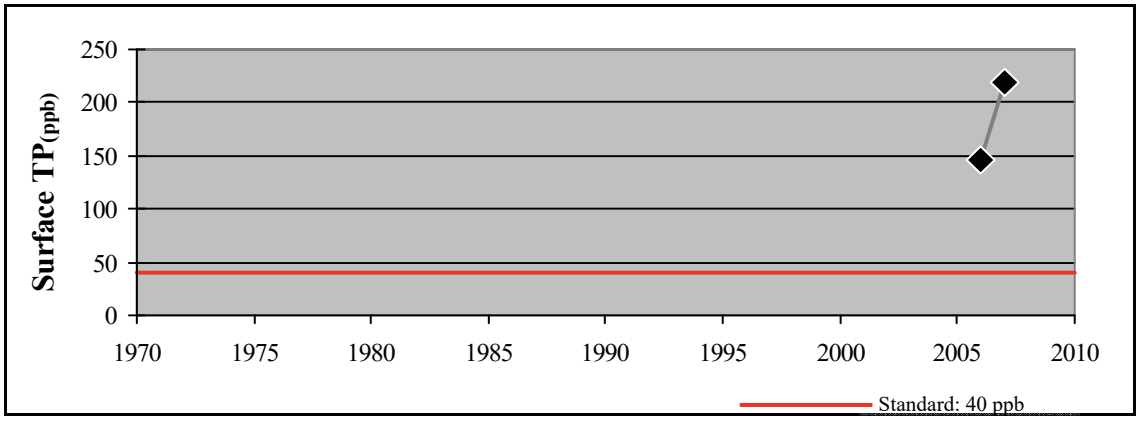

e.

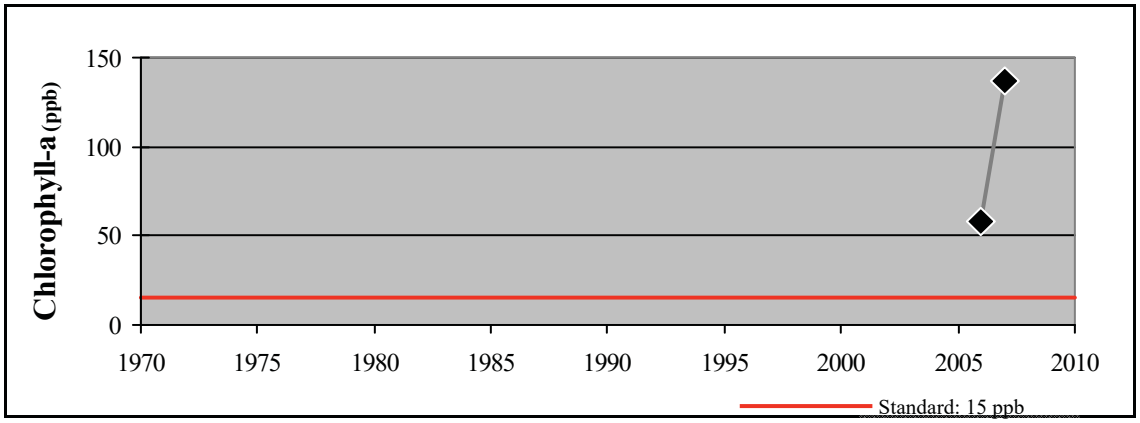

f.

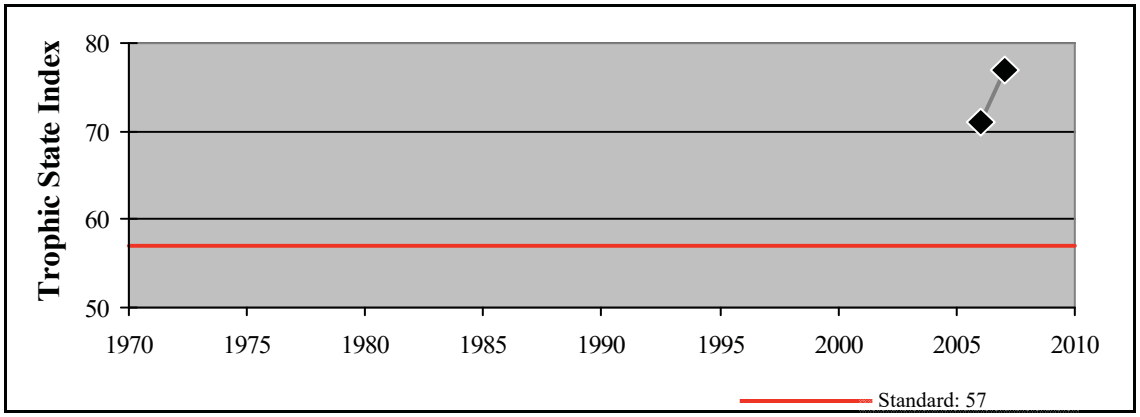

g.

Figure 10.5 (d - g) Holy Name Lake - Summer Mean Values

Wolsfeld Lake (DNR ID 27-0157-00)

MCWD Site ID: LWO01
GPS Coordinate: 44.832N, -93.698W
Located in the city of Medina
Surface Area (acres): 34
Max. Depth (ft): 26

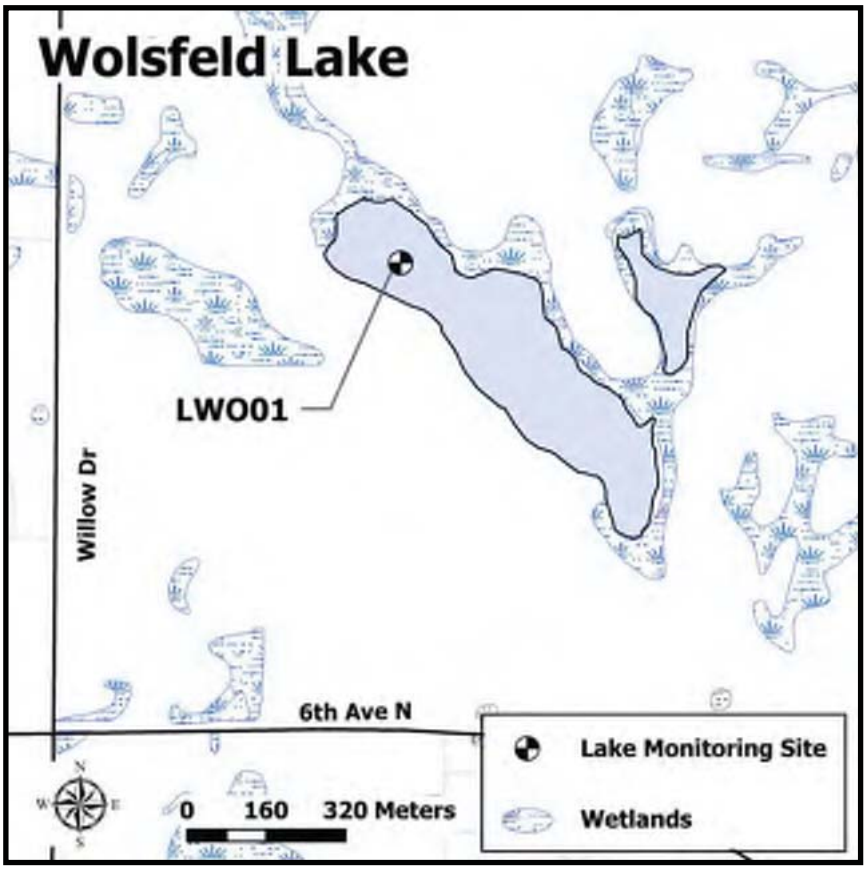

Figure 10.8 Wolsfeld Lake

Directions

There is currently no public access on Wolsfeld Lake. It is located just north of Hwy 6 near Willow Dr. in Medina.

Site Information

Wolsfeld Lake is a dimictic class 2B lake protected for aquatic life and recreation. MCWD staff has been monitoring the lake once a month from May through September since 2006. Surface samples were collected and the parameters analyzed include: total phosphorus (TP), and chlorophyll-*a*. Measurements of Secchi disc depth were also recorded.

2007 Data Summary

- Secchi disc depth declined throughout the season and was below the standard (1.2 m) for all but the initial measurement taken in late May.

- Chlorophyll-*a* concentrations increased throughout the season and were above the standard (15 ppb) for all samples.

- TP concentrations also increased throughout the season and were above the standard (40 ppb) for all samples.

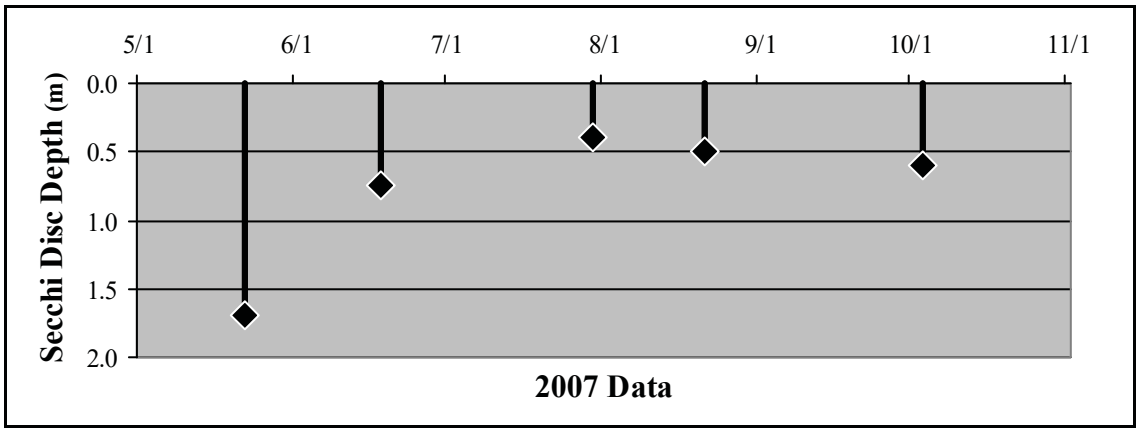

a.

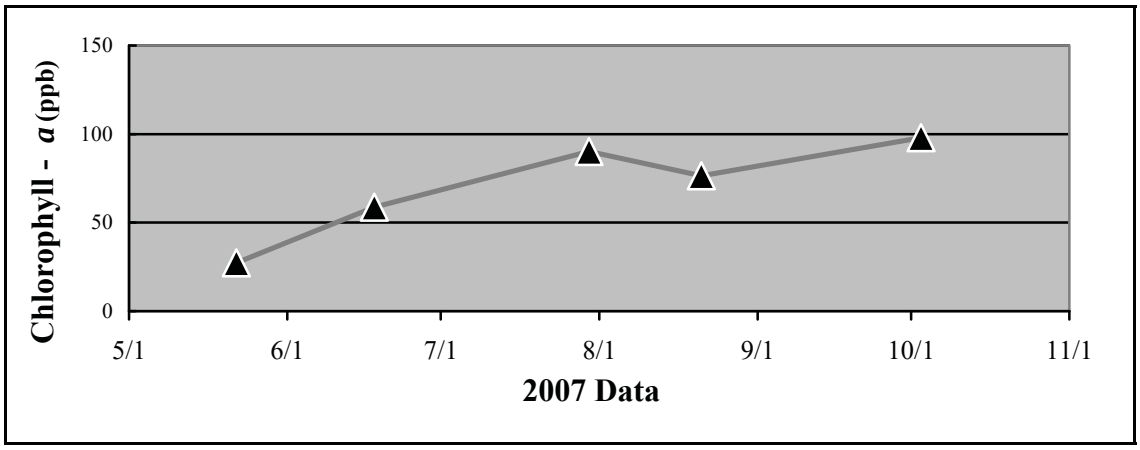

b.

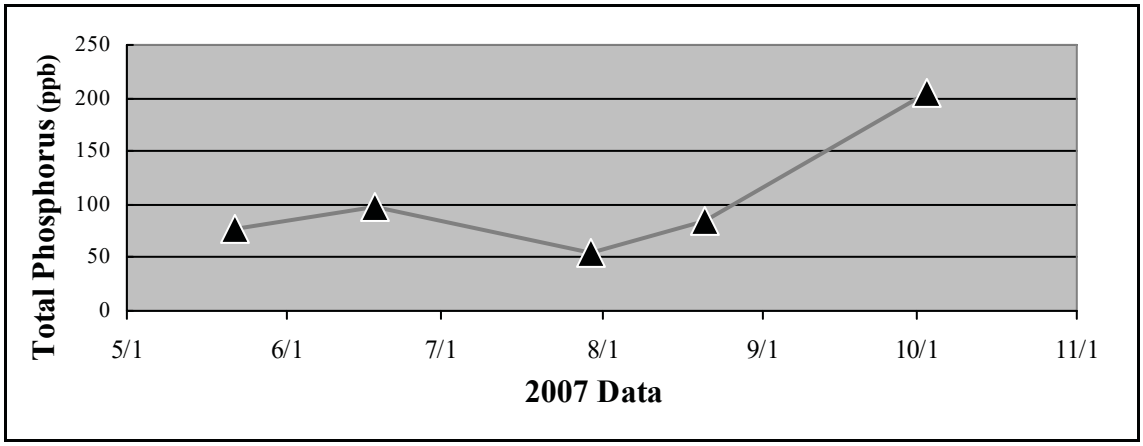

c.

Figure 10.9 (a-c) Wolsfeld Lake
2007 Grade: D

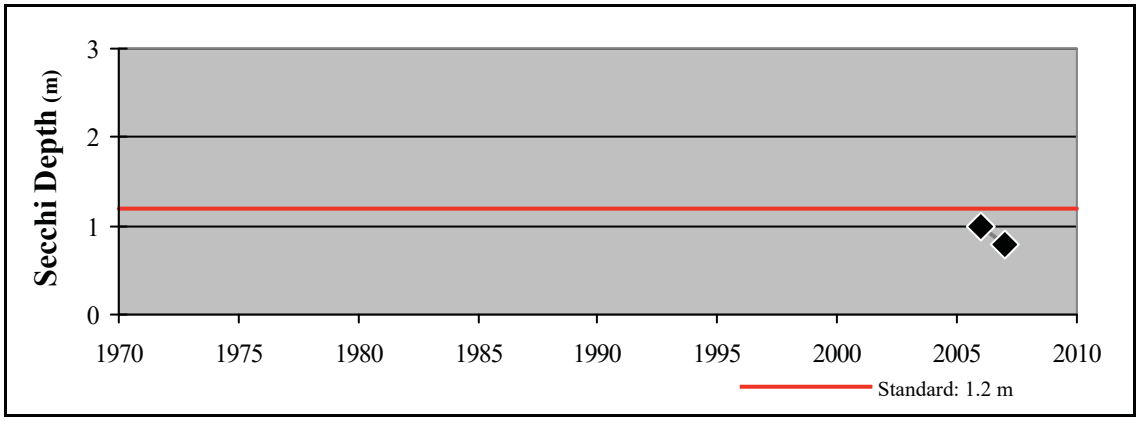

d.

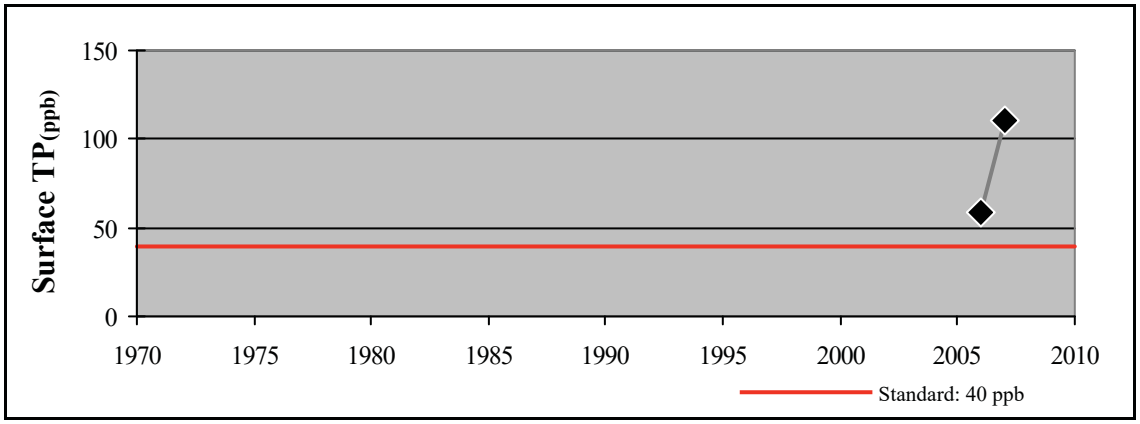

e.

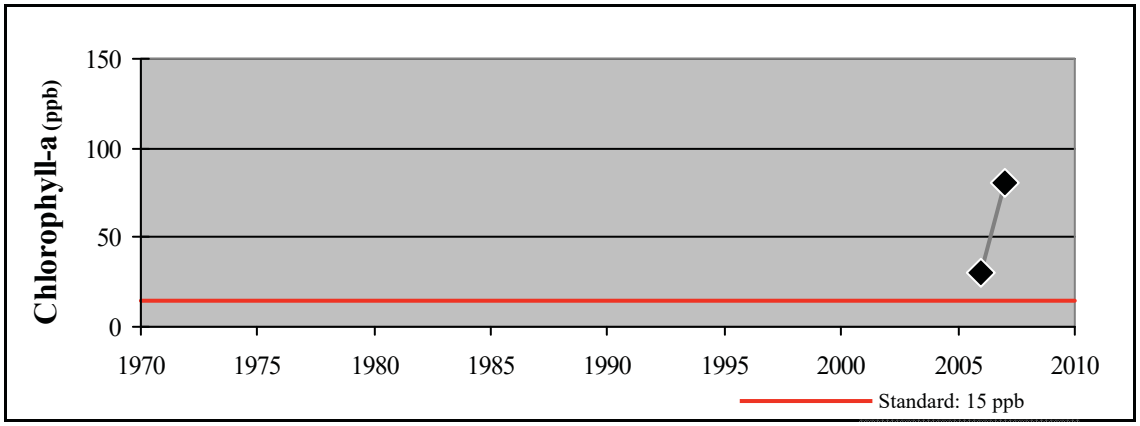

f.

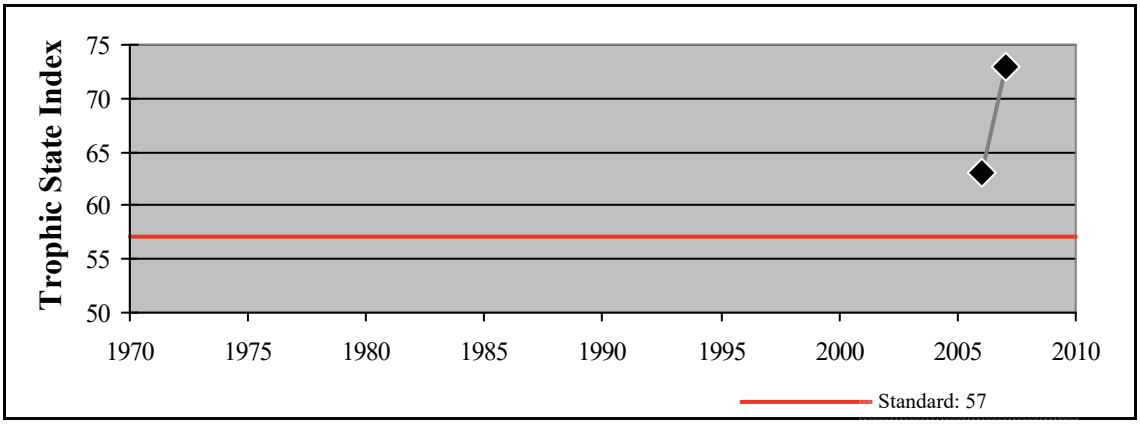

g.

Figure 10.9 (d - g) Wolsfeld Lake - Summer Mean Values

Ardmore Lake (27-0153) *Pioneer-Sarah Watershed Management Commission*

This was the first year that Ardmore Lake was monitored in the CAMP program. The lake is located in the City of Medina. The lake has surface area of 10.1 acres and a maximum depth of 6.1 m (20 feet). Most of the lake is considered littoral (approximately 9 acres with a depth of 0-15 feet). The lake has an average depth of 2.4 m (7.7 feet) and a volume of 78.0 acre-feet. There is no public access to the lake.

Ardmore Lake was monitored 4 times between mid-June and mid-August 2007. Secchi depth measurements were not recorded by the volunteer. Results are presented in both graphs and data tables on the lake's information sheet on the following page.

2007 summer (May-September) data summary

Parameter	*Mean*	*Minimum*	*Maximum*	*Grade*
TP (µg/l)	444.5	351.0	662.0	F
CLA (µg/l)	373.3	240.0	450.0	F
Secchi (m)				
TKN (mg/l)	5.50	2.10	6.90	
			Water Quality	F

The TP and chlorophyll means indicate that the water quality translates to a grade of F. The user perception rankings of physical condition and recreational suitability were not documented by the volunteer, and therefore are not reported here.

The Fisheries Section of the Minnesota Department of Natural Resources (MDNR) has conducted a fisheries survey on the lake. Information on the survey can be obtained through the MDNR Fisheries Section by calling (651) 297-4916 or by downloading the information off the Internet at http://www.dnr.state.mn.us/lakefind/.

If you notice any errors in the lake's data or physical information, or are aware of any additional or missing information, please contact Brian Johnson of the Metropolitan Council at (651) 602-8743 or brian.johnson@metc.state.mn.us.

Ardmore Lake

Medina, Hennepin Co.

Lake ID: 270153
WMO: Pioneer-Sarah Creek
Volunteer: Pioneer Sarah WMC

● Sampling site

Contours in meters

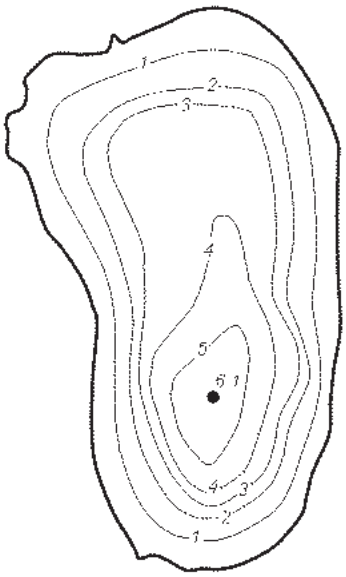

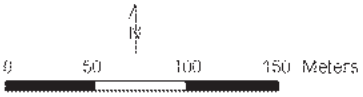

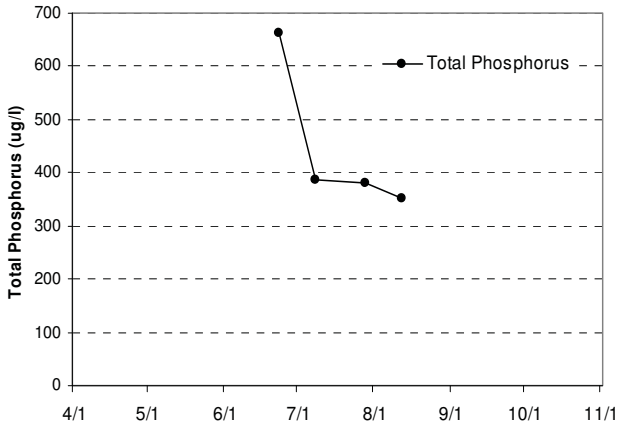

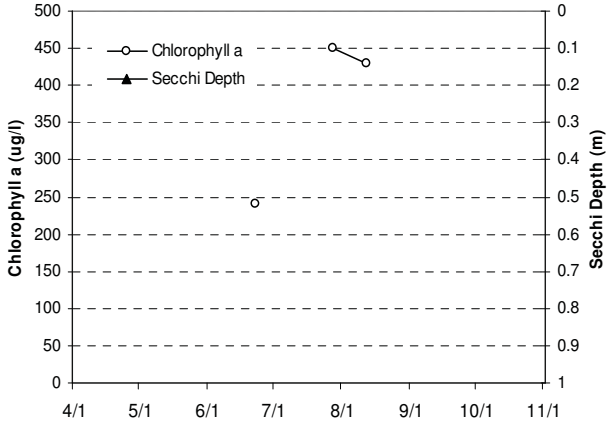

2007 Data

	Surf. Tmp	Bot. Tmp	Surf. DO	Bot. DO	CLA	Surf. TP	Bot. TP	Secchi	PC	RS
Date	C	C	(mg/L)	(mg/L)	(ug/L)	(ug/L)	(ug/L)	(m)	1 thru 5	1 thru 5
06/23/07					240	662				
07/08/07						385				
07/28/07					450	380				
08/12/07					430	351				

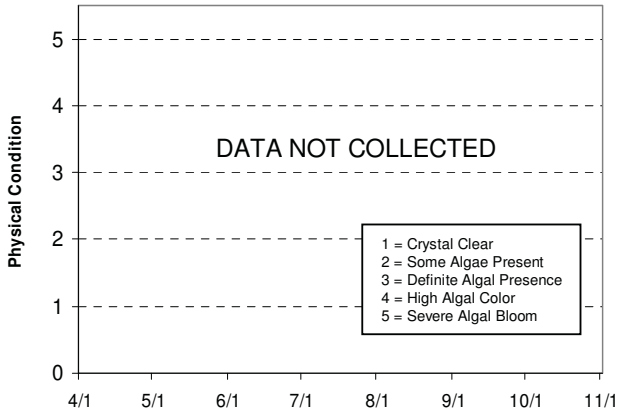

Lake Water Quality Grades Based on Summertime Averages

Year	1980	1981	1982	1983	1984	1985	1986	1987	1988	1989	1990	1991	1992	1993
Total Phosphorus														
Chlorophyll a														
Secchi Depth														
Overall														

Year	1994	1995	1996	1997	1998	1999	2000	2001	2002	2003	2004	2005	2006	2007
Total Phosphorus														F
Chlorophyll a														F
Secchi Depth														
Overall														**F**

Source: Metropolitan Council and STORET data

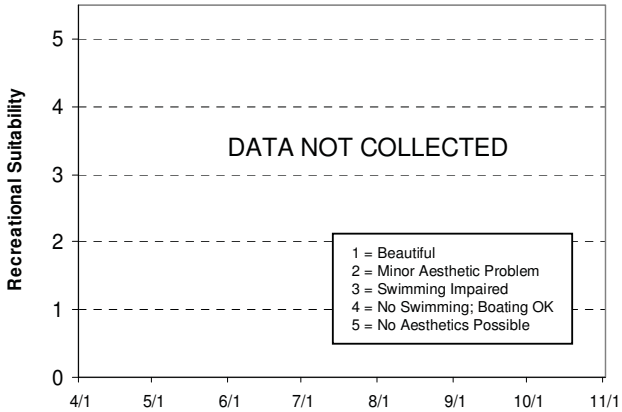

APPENDIX F

Stormwater Design Manual and Engineering Guidelines

CITY OF MEDINA

Stormwater Design Manual

City of Medina

May 2011

Project No. 000190-10031-0

Bonestroo

Table of Contents

1.0 Design Overview

The City of Medina's Local Surface Water Management Plan (LSWMP) identifies the goals and policies that define the City's stormwater management program. Medina's stormwater requirements were written meet the City's goals to preserve, protect, and manage its water resources as well as to meet federal, state, and watershed stormwater regulations. Additionally, the City of Medina will need to meet the pollutant reduction requirements of current and future total maximum daily loads (TMDLs) specified for waterbodies in whose watershed it resides.

2.0 Procedure for Reviewing Stormwater Management Plans

All new development and redevelopment will require the submittal of a stormwater management plan. It is highly recommended that a concept plan be submitted prior to the preparation of a final stormwater management plan. The concept plan identifies basic site information, locations of proposed development features, and preliminary locations and sizing of stormwater treatment practices. The concept plan allows the review to be conducted in conjunction with a preliminary development plan or site plan. The review of a concept plan helps to identify major issues related to regulatory oversight of the planned development. It is less time consuming and more efficient to evaluate proposed development plans with this step of the review process. The final plan provides more detailed design information for the proposed stormwater practices, and includes much more detail in terms of hydrologic conditions and site features. The general review process, from the submittal of the concept and final plans to the issuance of the Stormwater Management Plan approval, is summarized in the following five steps.

1) What permits, or approvals, are required for the project site, and what waivers and/or exemptions are applicable?
2) Are the selected practices appropriate for this site?
3) Are the practices designed to meet the minimum performance criteria?
4) Does the Plan meet other resource protection requirements as specified in the City of Medina Code?
5) Are provisions for long-term maintenance adequate?

3.0 Submittal Requirements

<u>Requirements for Stormwater Management Plan Approval</u>

Stormwater Management Plan Required for All Developments

No application for development, or redevelopment, will be approved unless it includes a stormwater management plan detailing how runoff and associated water quality impacts resulting from the development will be controlled or managed. This plan must indicate whether stormwater will be managed on-site or off-site and, if on-site, the general location and type of practices.

The stormwater management plan must be signed by a licensed professional engineer in the State of Minnesota, who will verify that the design of all stormwater management practices meet

the submittal requirements outlined in the Submittal Checklist found in the stormwater design manual. No building permit, grading permit, sediment control permit, or plat approval shall be issued until a satisfactory final stormwater management plan, or a waiver thereof, shall have undergone a review and been approved by the City of Medina after determining that the plan or waiver is consistent with the requirements of this manual.

Stormwater Management Conceptual Plan Requirements (Optional)
A stormwater management concept plan submittal is optional, but highly encouraged. A concept plan submittal has a greater chance of identifying major obstacles and can facilitate alternative stormwater management arrangements in a timely fashion. If a concept plan is submitted for review, it should include sufficient information (e.g., maps, hydrologic calculations, etc) to evaluate the environmental characteristics of the project site. This information should show the potential impacts of all proposed development of the site, both present and future, on the water resources, and show the effectiveness and acceptability of the measures proposed for managing stormwater generated at the project site. The intent of this conceptual planning process is to determine the type of stormwater management measures necessary for the proposed project, and ensure adequate planning for management of stormwater runoff from future development. To accomplish this goal the following information shall be included in the concept plan:

1. A map (or maps) indicating the location of existing and proposed buildings, roads, parking areas, utilities, structural stormwater management and sediment control facilities. The map(s) will also clearly show proposed land use with tabulation of the percentage of surface area to be adapted to various uses; drainage patterns; locations of utilities, roads and easements; the limits of clearing and grading; a written description of the site plan and justification of proposed changes in natural conditions may be required.
2. Sufficient engineering analysis to show that the proposed stormwater management measures are capable of controlling runoff from the site in compliance with the Stormwater Design Manual.
3. A written or graphic inventory of the natural resources at the site and surrounding area as it exists prior to the commencement of the project and a description of the watershed and its relation to the project site. This description should include a discussion of soil conditions, forest cover, topography, wetlands, and other native vegetative areas on the site. Particular attention should be paid to environmentally sensitive features that provide particular opportunities or constraints for development.
4. A brief written description of the required maintenance burden for the proposed stormwater management facility.
5. The concept plan may also consider the maximum development potential of a site under existing zoning, regardless of whether the applicant presently intends to develop the site to its maximum potential.

For development or redevelopment occurring on a previously developed site, an applicant should include within the concept plan measures for controlling existing stormwater runoff discharges from the site in accordance with the standards of this Manual to the maximum extent practicable. After review of the concept plan and modifications are made to that plan as deemed necessary by the City of Medina, a final stormwater management plan may be submitted for approval.

Stormwater Management Plan Requirements (Required)
The final stormwater management plan shall include all of the information required in the Final Stormwater Management Plan checklist found at the end of the Medina Stormwater Design Manual. This includes:

1. Contact Information
The name, address, and telephone number of all persons having a legal interest in the property and the tax reference number and parcel number of the property or properties affected.

2. Topographic Base Map
A 1" = 200' topographic base map of the site which extends a minimum of fifty (50) feet beyond the limits of the proposed development and indicates existing surface water drainage including streams, ponds, culverts, ditches, and wetlands; current land use including all existing structures; locations of utilities, roads, and easements; and significant natural and manmade features not otherwise shown.

3. Calculations
Hydrologic and hydraulic design calculations for the predevelopment and postdevelopment conditions for the design storms specified in this manual. Such calculations shall include:

1. design storm frequency, amount, and duration,
2. time of concentration,
3. Runoff Curve Numbers or runoff coefficients,
4. peak runoff rates and total runoff volumes for each watershed area,
5. pond and wetland high-water levels and storage volumes,
6. infiltration rates, where applicable,
7. culvert capacities,
8. flow velocities,
9. data on the change in rate and volume of runoff for the design storms referenced in the Medina Stormwater Design Manual, and
10. documentation of sources for all computation methods and field test results.

4. Soils Information
If a stormwater management control measure depends on the hydrologic properties of soils (e.g., infiltration basins), then soils information (e.g., Hennepin County Soil Survey, soil boring data, or soils report) shall be submitted. The soils report shall be based on on-site boring logs or soil pit profiles. The number and location of required soil borings or soil pits shall be determined based on what is needed to determine the suitability and distribution of soil types present at the location of the control measure.

5. Maintenance and Repair Plan
The design and planning of all stormwater management facilities shall include detailed maintenance and repair procedures to ensure their continued function. These plans will identify the parts or components of a stormwater management facility that need to be maintained and the equipment and skills or training necessary. Provisions for the periodic review and evaluation of the effectiveness of the maintenance program and the need for revisions or additional maintenance procedures shall be included in the plan.

- *Landscaping plan*
  The applicant must present a detailed plan for management of vegetation associated with stormwater features after construction is finished, including who will be responsible for the maintenance of vegetation at the site and what practices will be employed to ensure that adequate vegetative cover is preserved.

- *Maintenance Easements*
  The applicant must ensure access to all stormwater treatment practices at the site for the purpose of inspection and repair by securing all the maintenance easements needed on a

permanent basis. Maintenance easements will be recorded with the plat, and will remain in effect, even if the title of the property is transferred to a new owner.

- *Maintenance Agreement*
  The applicant must execute an easement and an inspection and maintenance agreement binding on all subsequent owners of land served by an on-site stormwater management measure in accordance with the requirements of this manual.

- *Other Environmental Permits*
  The applicant shall assure that all other applicable environmental permits have been or will be acquired for the site.

4.0 List of Acceptable Practices

In the development of the stormwater management practice appropriate for the development or redevelopment, infiltration (water quality volume) is foremost in importance to apply in the design. Filtration is warranted when site conditions do not allow for an effective infiltration facility. For flooding or rate control, detention systems are typically the preferred practice. Alternative practices may be approved at the discretion of the City Engineer.

Infiltration Systems:
- Infiltration Trench
- Infiltration Basin
- Raingarden
- Underground Storage

Filtration Systems:
- Surface Sand Filter
- Underground Sand Filter
- Perimeter Sand Filter
- Organic Filter
- Bioretention System
- Raingarden
- Pervious Pavement
- Underground Storage
- Tree Trench

Detention Systems:
- Wet Pond
- Multiple Pond System
- Extended Detention Basin
- Micro-pool Extended Detention Basin
- Dry Detention Ponds
- Underground Storage
- Other, as approved by the City of Medina

Wetlands:
- Shallow Wetland
- Pond/Wetland System

Open Channel Systems:

- Dry Swale
- Wet Swale
- Grass Swale
- Natural channel, or stream

5.0 Guidance on Stormwater Treatment Practice (STP)

Designers are expected to follow the nine step screening process for stomwater treatment practice (STP) selection detailed in Chapter 7 of the Minnesota Stormwater Manual. Stormwater Treatment Practices will be scrutinized using the same matrices found in Chapter 7 as part of the review process. Deviations from recommended guidance in the Minnesota Stormwater Manual will require detailed written explanation. Approval of any deviation from the Minnesota Stormwater Manual guidance will be at the discretion of the City of Medina.

The 9 step screening process that should be used in the BMP selection process is as follows:

1. **Investigate Pollution Prevention Opportunities**:
   Evaluate the site to look for opportunities to prevent pollution sources on the land from becoming mobilized by runoff.

2. **Design Site to Minimize Runoff**:
   Assess whether any better site design techniques can be applied at the site to minimize runoff and therefore reduce the size of structural BMPs. Better site design considers the following principles in the design of the STP:

   - **Preserves Natural Areas**
   - **Reduction of Impervious Areas and Distributing Stormwater**
   - **Reducing Impervious Cover**

3. **Select Temporary Construction Sediment Control Techniques**:
   Check to see what set of temporary sediment control techniques will prevent erosion and minimize site disturbance during construction.

4. **Identify Receiving Water Issues**:
   Understand the regulatory status of the receiving water to which the site drains. Depending on the nature of the receiving water, certain BMPs may be promoted, restricted, or prohibited, or special design or sizing criteria may apply.

5. **Identify Climate and Terrain Factors**:
   Climate and terrain conditions vary widely across the state, thus designers need to explicitly consider how each regional factor will influence the BMPs proposed for the site.

6. **Evaluate Stormwater Treatment Suitability**:
   Not all BMPs work over the wide range of storm events that need to be managed at the site, so designers need to choose the type or combination of BMPs that will provide the desired level of treatment.

7. **Assess Physical Feasibility at the Site**:

Each development site has many physical constraints that influence the feasibility of different kinds of BMPs; designers confirm feasibility by assessing eight physical factors at the site.

8. **Investigate Community and Environmental Factors**:
   Each group of BMPs provides different economic, community, and environmental benefits and drawbacks; designers need to carefully weigh these factors when choosing BMPs for the site.

9. **Determine Any Site Restrictions and Setbacks**:
   Check to see if any environmental resources or infrastructure is present that will influence where a BMP can be located at the development site.

6.0 Basic Sizing Criteria

Proposed stormwater management plans must incorporate Volume Control, Water Quality Control, and Rate Control as the basis for stormwater management in the proposed development plan. All proposed stormwater management practices must fulfill Volume Control, Water Quality, and Rate Control sizing requirements.

6.1 Volume Control Requirements

Volume control measures are required on projects to meet the water quality criteria of the City of Medina's Local Surface Water Management Plan. Volume control shall be required for proposed new impervious area. If an applicant can demonstrate that the volume control standard has been met, then the water quality sizing criteria shall be considered satisfied.

6.1.1 Volume Control Calculations

Depending on applicability, a proposed development shall have one of the following Stormwater Treatment Practices (STP): an infiltration STP or a filtration STP that collects and treats the following volume of stormwater runoff:

Volume calculation for Infiltration Practice (VCinf):

VCinf (cf) = 1.1" x (1/12) x (area of proposed new impervious area in sq. ft.)

Volume Calculation for Filtration Practice (VCfil):

VCfil (cf) = VCinf x 1.5

If volume control is infeasible due to site restrictions such as tight soils, contaminated soils, or lack of separation between facility and groundwater (minimum 3' of separation), the site may employ a management practice that demonstrates a reduction in 20% phosphorus loading over existing conditions. Specifications for this practice are detailed in the Water Quality Control section.

Volume Control for Single-family Residences

In lieu of providing a stormwater management plan documenting that the volume control requirements are being met, single-family residences can satisfy the volume control requirement with the construction of a bioretention facility, or raingarden. The surface area of the base

(bottom of fill) of the raingarden shall be determined by the amount of new impervious area being added to the property. The base area required in the raingarden shall be calculated using the following formula:

Base of Raingarden (square feet) = 0.0733 x Area of New Impervious (square feet)

The raingarden design shall follow the Medina Typical Rain Garden Detail for Single Family Home. Impervious area draining to a single raingarden shall not exceed 0.5 acres. Multiple raingardens are acceptable to treat impervious areas greater than 0.5 acres in size. Draintile shall be provided as needed, in accordance with the Typical Rain Garden Detail. Additional design guidance may be found in the 2005 Minnesota Stormwater Manual in Chapter 12-6, Bioretention.

Volume Control with Irrigation

Irrigation as an STP may receive full credit towards satisfying the VCinf requirement in lieu of using on-site infiltration. However, acceptance of this practice will be determined on a site-by-site basis subject to the approval of the City of Medina City Engineer.

6.3 Water Quality Control

The water quality control standard shall be considered satisfied, if the volume control standard has been satisfied. In the event that that it is infeasible to meet the volume control standard due to contaminated soils, site constraints, etc., the proposed management practice will need to detain and treat a sufficient volume of stormwater to achieve a phosphorus load reduction of 20% from existing conditions using an approved Stormwater Treatment Practice (STP). The 20% reduction requirement does not apply to land use classifications for meadow, forested, open space, or wetland land use, see Table 1. These areas are considered natural condition areas and no additional phosphorus reduction is needed from these areas. Water quality treatment for these natural condition areas shall be controlled to existing phosphorus loading conditions only. If unable to apply an infiltration or filtration management practice due to site physical constraints, then justification shall be documented and submitted for approval by the City Engineer. Approval of a waiver from the Volume Control requirement will be evaluated on a case-by-case basis. Demonstration that the water quality criteria have been met shall be done using PondNet, or other approved water quality modeling method. If using PondNet, then the event mean concentrations found in Table 2 shall be used. The volume required using PondNet would be known as the Water Quality Volume (WQv) required for the proposed development.

Table 1: Event Mean Concentrations for PondNet Modeling

Land Use	Phosphorus (P) Runoff Concentration (PPB)
Row Crop Agriculture	540
Pasture	350
Meadow*	200
Rural Residential	255
Urban Residential	450
Forested*	200
Commercial, Industrial	350
Open Space*	200
Golf Course	550
Right-of-Way	400
Wetland*	200

* - Natural Condition Area

A Microsoft Excel™ version of PondNet can be made available upon request to the City of Medina.

6.4 Rate Control

Post development discharge rates must be less than or equal to existing conditions discharge rates for the 1-year (2.4-inch), 10-year (4.1-inch) and 100-year (5.9-inch) NRCS Type II, 24-hour storm events. In some cases where there is the potential for adverse downstream impacts, the rate control requirement may be more stringent than the existing conditions standard. Ultimately, the stormwater system will be managed so that development, redevelopment, and other infrastructure projects do not overburden the existing downstream system for the design event.

All runoff calculations shall be according to the methodology described in the Natural Resources Conservation Service's Technical Release 55, "Urban Hydrology for Small Watersheds" (commonly referred to as TR-55). Example acceptable modeling software includes HydroCAD and XP-SWMM. Other methodology may be used with prior approval by the City. Composite curve numbers shall not be used; instead, proposed contributing areas shall be broken into one of the cover types in Table 2.

Curve numbers for each land use shall be chosen based on Table 2.

Table 2: Curve Numbers for Use in Hydrologic Computations

	Hydrologic Soil Group			
Cover Type	**A**	**B**	**C**	**D**
Open Water	100	100	100	100
Pasture	68	79	86	89
Meadow	30	58	71	78
Forested	55	55	70	77
Developed Open Space[1]	61	61	74	80
Impervious Areas[2]	98	98	98	98
Agricultural Land[3]	Peak Growth Formula			
Row Crop - Fallow	77	86	91	94
Row Crop – Average	72	81	88	91
Gravel Road	76	85	89	91
Wetlands	98	98	98	98

[1] *Lawns, parks, golf courses, other grassy areas, etc.*

[2] *Streets, parking lots, roofs, driveways, etc.*

[3] *Where existing conditions are characterized by agricultural land use, the "peak growth" curve number should be utilized. Calculation of the peak growth curve number is based on the following formula:*

*CN average = ½ * (CN normal peak growth + CN fallow), or*

*CN normal peak growth = 2 * (CN average) - CN fallow*

For example, for row crop agriculture and hydrologic soil group B, the peak growth curve number is 76. This is based on average and fallow curve numbers of 81 and 86, respectively.

A Type II 24-hour rainfall distribution with, average antecedent moisture conditions, should be utilized for runoff calculations. The recommended minimum outlet diameter is 6-inches due to plugging susceptibility and may supersede the rate control requirement for the 2-year event. Infiltration will not be considered when determining rate control or freeboard. Waterbodies should be modeled with the starting water level at their outlet elevation.

City standard detail plates should be utilized for pond outlet structures. It is recommended that outlet structures be designed in three phases with a primary outlet structure and secondary overflow structure routed to the storm sewer and a defined emergency overflow as the tertiary outlet structure.

Bounce of water level within the wetlands shall be maintained according to the following table:

Table 3: Bounce Restriction for Runoff Directed Through Wetlands

Protection Classification	Additional Protection Requirements Bounce - Change in water level due to runoff event
Preserve	Maintain bounce at or below existing conditions
Manage 1	Maintain bounce at or below existing conditions plus 0.5 feet
Manage 2	Maintain bounce at or below existing conditions plus 1.0 feet
Manage 3	No quantity requirement

The following items shall be considered in the management of landlocked basins:

- The flood levels established for landlocked basins shall take into consideration the effects of water level fluctuations on trees, erosion, and property values. Steeply sloped shorelines subject to slope failure and shoreline damage should not be in contact with floodwaters for extended periods.
- The capacity of proposed outlets to landlocked basins should not be so small as to cause extended duration of high water levels that would result in damage to upland vegetation. Exceptions to this policy include basins that are strictly regional stormwater management basins and not formerly wetlands. Exceptions also include wetlands converted to regional stormwater management basins through mitigation of the affected wetland areas.

6.5 Freeboard

Elevation separations of buildings with respect to ponds, lakes, streams, and storm water features shall be designed as follows:

1. At least two feet of vertical separation is required from an area's emergency overflow elevation to the lowest opening of a home. In areas where this separation is not or cannot be provided, we require additional analysis showing that the 100-year back-to-back storm event does not impact adjacent homes.
2. Drainage easements and outlots for ponds, lakes, wetlands, streams etc. shall encompass an area to the calculated one foot above the 100-year HWL.

6.6 Stormwater Treatment Practice Design Standards

6.6.1 Storm Sewers

1. Manhole spacing shall not exceed 400 feet.
2. Where more than one pipe enters a structure, a catch basin/manhole shall be used.
3. Storm sewer pipe should match top of pipe to top of pipe unless grade constraints prevent this. In that case, hydraulic calculations will be necessary to verify that excessive surcharging will not occur.
4. Storm water pipes shall be designed utilizing the Rational Method. Channel design shall be hydrograph method only. All methods are subject to the City Engineer's approval.
5. Lateral systems shall be designed for the 10-year rainfall using the Rational Method. State Aid roadway storm sewer shall be designed per the State Aid requirements.
6. The minimum full flow velocity within the storm sewer should be 3 feet per second (fps). The maximum velocity shall be 10 fps, except when entering a pond, where the maximum velocity shall be limited to 6 fps.
7. Trunk storm sewer should be designed at a minimum to carry 100-year pond discharge in addition to the 10-year design flow for directly tributary areas. The following table may be used for the calculation of peak rates using the Rational Method:

Table 3: Rational Method Runoff Coefficients for Storm Sewer Design

Cover Type	10-Year Runoff Coefficient
Single-family Residential	0.4
Multi-family Residential	0.5
Commercial	0.7
Industrial	0.7
Parks, Open Space	0.2
Ponds, Wetlands	1.0

8. For storms greater than the 10-year event, and in the case of plugged inlets, transient street ponding will occur. For safety reasons, the maximum depth in streets should not exceed 1.5 feet at the deepest point.
9. To promote efficient hydraulics within manholes, manhole benching shall be provided to ½ diameter of the largest pipe entering or leaving the manhole.

10. Vaned grate (3067V) catch basin castings shall be used on all streets.
11. The maximum design flow at a catch basin for the 10-year storm event shall be 3 cubic feet per second (cfs), unless high capacity grates are provided. Catch basins at low points will be evaluated for higher flow with the approval of the City Engineer.
12. All structures located in the street are to be a minimum of four feet deep (rim to invert) and a minimum of three feet deep elsewhere. Two-by-three catch basins are to be four feet deep.
13. The last structure in the street prior to discharging into a pond is to be a minimum of five feet deep with a four-foot deep sump, where appropriate.

6.6.2 Outlet and Inlet Pipes

1. Inlet pipes of stormwater ponds should be extended to the pond normal water level whenever possible.
2. Outfalls with velocities greater than 4 fps into channels, where the angle of the outfall to the channel flow direction is greater than 30-degrees, requires energy dissipation or stilling basins.
3. Outfalls with velocities of less than 4 fps, that project flows downstream into a channel in a direction 30-degrees or less from the channel flow direction, generally do not require energy dissipaters or stilling basins, but will require riprap protection.
4. In the case of discharge to channels, rip rap should be provided on all outlets to an adequate depth below the channel grade and to a height above the outfall or channel bottom. Rip rap should be placed over a suitably graded filter material and filter fabric to ensure that soil particles do not migrate through the riprap and reduce its stability. Riprap should be placed to a thickness at least 2.5 times the mean rock diameter to ensure that it will not be undermined or rendered ineffective by displacement. If riprap is used as protection for overland drainage routes, grouting may be recommended.
5. Discharge velocity into a pond at the outlet elevation shall be 6 fps or less. Riprap protection is required at all inlet pipes into ponds from the NWL to the pond bottom.
6. Where outlet velocities to ponds exceed 6 fps, the design should be based on the unique site conditions present. Submergence of the outlet or installation of a stilling basin approved by the City is required when excessive outlet velocities are experienced.
7. Submerged outlet pipes from ponds are not allowed.

6.6.3 Channels and Overland Drainage

1. Overland drainage routes where velocities exceed 4 fps should be reviewed by the City Engineer and approved only when suitable stabilization measures are proposed.
2. Open channels and swales are recommended where flows and small grade differences prohibit the economical construction of an underground conduit. Open channels and swales can provide infiltration and filtration benefits not provided by pipe.
3. The minimum grade in all unpaved areas shall be 2%.
4. Maximum length for drainage swales shall be 400 feet.
5. Channel side slopes should be a maximum of 4:1 (horizontal to vertical) with gentler slopes being desirable.
6. Rock riprap should be provided at all points of juncture. Particularly between two open channels and where storm sewer pipes discharge into a channel.

7. Open channels should be designed to handle the expected velocity from a 10-year design storm without erosion. Riprap or concrete liners may need to be provided.
8. Periodic cleaning of an open channel is required to ensure that the design capacity is maintained. Therefore, all channels should be designed to allow easy access for equipment.

6.6.4 Ponds

1. Maximum allowable pond slopes above the outlet elevation are 4:1.
2. All constructed ponds and wetland mitigation areas shall have an aquatic or safety bench around their entire perimeter. The aquatic bench is defined as follows:
    a. Cross-slope no steeper than 10:1.
    b. Minimum width 10 feet.
    c. Located from pond outlet elevation to one foot below pond outlet elevation.
3. All constructed ponds shall be provided a maintenance access from an adjacent roadway. The maintenance access shall be provided in the form of an easement no narrower than 20 feet. The maintenance access shall have a longitudinal slope no steeper than 6:1 and minimal cross slope. Maintenance access routes, due to their extra width, also serve well as emergency overflow (EOF) routes.
4. All constructed ponds and wetland mitigation areas shall have a maintenance access bench around sufficient perimeter to provide access to all inlets and outlets. The maintenance bench should be located within a designated outlot, or within a permanent easement. The maintenance bench should extend from the outlet elevation to 1 foot above the outlet elevation and its cross slope should be no steeper than 10:1. The maintenance bench shall connect to the maintenance access.
5. Maximum pond wet volume depth is 8 feet.
6. Mean depth for wet ponds should be a minimum of 4 feet. If the pond is smaller than 3 acre-feet in volume, mean depths of 3 to 4 feet may be used. Mean depth is defined as the area at outlet elevation divided by the wet volume.
7. All ponds shall be graded to one-foot below design bottom elevation. This "hold down" allows sediment storage until site restoration is complete.
8. The top berm elevation of ponds shall be a minimum of one foot above the 100-year pond HWL.
9. Grading shall not block or raise emergency overflows from adjoining properties unless some provision has been made for the runoff that may be blocked behind such an embankment.
10. All ponds shall have a protected EOF.

6.6.5 Infiltration/Filtration Practices

1. Sizing of filtration/infiltration practices shall be in conformance with the volume control requirements of this manual.
2. When designing an infiltration practice for volume control and water quality management, on-site testing and detailed analysis are strongly encouraged in order to determine the infiltration rates of the proposed infiltration facility. Documented site-specific infiltration or hydraulic conductivity measurements (double-ring infiltrometer)

completed by a licensed soil scientist or engineer is required. In the absence of a detailed analysis, the saturated infiltration rates listed in the **Table 4: Infiltration Rates for Infiltration STPs,** found in Appendix A of this manual, must be used. A piezometer shall be installed in order to ascertain the level of the local groundwater table and demonstrate at least three (3) feet of separation between the bottom of the proposed facility and the groundwater. The soil boring is required to go to a depth of at least five feet below the proposed bottom of the facility, or STP. The soils must be classified using the Unified Soil Classification system. The least permeable soil horizon will dictate the infiltration rate. Infiltration practices shall be designed to infiltrate the required runoff volume within 48 hours.

3. Pretreatment, in the form of ponds, forebays or filter strips or other approved methods shall be provided for all infiltration areas. Pretreatment upstream of volume management practices is a key element in the long-term viability of infiltration areas. The level of pretreatment varies largely depending on the BMP and drainage area. Local watershed district, City staff, and Minnesota Stormwater Manual recommendations will be utilized for determining the appropriate level of pretreatment on a case-by-case basis.
4. The infiltration practice cannot be used within fifty (50) feet of a municipal, community or private well, unless specifically allowed by an approved wellhead protection plan.
5. The infiltration practice cannot be used for runoff from fueling and vehicle maintenance areas and industrial areas with exposed materials posing contamination risk, only if the infiltration practice is designed to allow for spill containment.
6. The infiltration practice cannot be used in HSG types C & D soils without soil corrections.
7. Vegetation of infiltration/filtration practices shall be as shown on the BMP details of the City of Medina Detail Standards. A plan for the management of vegetation shall be included in the stormwater management plan.
8. If soils are unsuitable for infiltration, then filtration may be used with drain tile, provided in accordance with the BMP Details of the City of Medina Detail Standards.
9. Subgrade soils for infiltration/filtration practices shall be as presented in the BMP Details of the City of Medina Detail Standards. Assume a 30% void ratio for the purposes of volume calculations.
10. For infiltration benches adjacent to ponds, benches shall have slopes no steeper than 5:1 over the proposed infiltration zone. A slope of 10:1 is preferred. The Minnesota Stormwater Manual cites concerns with locating infiltration features immediately adjacent to ponds. To address this, benches shall be located to maintain hydraulic separation from the saturated zone of the pond in order to decrease the infiltration potential over time.

6.6.6 Emergency Overflow Paths

1. Emergency Overflows (EOF) should be sized with a minimum bottom width of five feet and 4:1 side slopes.
2. The maximum flow depth in EOFs should be less than or equal to one foot as calculated for a 100-year back-to-back storm event.

7.0 Design Examples

Design process for each of the acceptable Stormwater Treatment Practice is detailed in Chapter 12 of the Minnesota Stormwater Manual.

8.0 Stormwater Treatment Practice Detail Drawings

Please refer to the City of Medina Engineering Details.

9.0 Construction Specifications

Construction specifications and details are found in the Minnesota Stormwater Manual in Chapter 12 for each of the acceptable BMPs, unless otherwise restricted by this ordinance.

10.0 Checklists

Final Stormwater Management Plan Checklist

- Applicant information
  - Name, legal address, and telephone number
- Common address and legal description of site
- Signature or stamp of registered engineer
- Vicinity map
- Existing and proposed mapping and plans (recommended scale of 1" = 50' or greater detail) which illustrate at a minimum:
  - Existing and proposed topography (minimum of 2-foot contours recommended)
  - Perennial and intermittent streams
  - Mapping of predominant soils from USDA soil surveys as well as location of any site-specific borehole investigations that may have been performed
  - Location and boundaries of resource protection areas such as wetlands, lakes, ponds, and other setbacks (e.g., stream buffers, drinking water well setbacks, septic setbacks)
  - Location of existing and proposed roads, buildings, and other structures
  - Location of existing and proposed utilities (e.g., water, sewer)
  - Location of existing and proposed conveyance systems such as grass channels, swales, and storm drains
  - Existing and proposed drainage boundaries, including off-site drainage boundaries
  - Flow paths
  - Location of floodplain/floodway limits and relationship of site to upstream and downstream properties and drainages
  - Location and dimensions of proposed channel modifications, such as bridge or culvert crossings
  - Location, size, maintenance access, and limits of disturbance of proposed structural stormwater management practices
- Representative cross-section and profile drawings and details of structural stormwater management practices and conveyances (i.e., storm drains, open channels, swales, etc.) which include:
  - Existing and proposed structural elevations (e.g., invert of pipes, catchbasins, etc.)
  - Design water surface elevations
  - Structural details of outlet structures, embankments, spillways, stilling basins, grade control structures, conveyance channels, etc.
  - Logs of borehole investigations that may have been performed along with supporting geotechnical report.
- Hydrologic and hydraulic analysis for all structural components of stormwater system (e.g., storm drains, open channels, swales, management practices, etc.) for applicable design storms including:
  - Existing condition analysis for runoff rates, volumes, velocities, and water surface elevations showing methodologies used, design parameters, and supporting calculations
  - Proposed condition analysis for runoff rates, volumes, velocities, water surface elevations, and routing showing the methodologies used, design parameters, and supporting calculations
  - Final sizing calculations for structural stormwater management practices including contributing drainage area, storage, high water level, peak inflow and outflow, and outlet configuration

    - Stage-discharge or outlet rating curves and inflow and outflow hydrographs for storage facilities (e.g., stormwater ponds and wetlands)
    - Analysis, computations, and supporting materials indicating that water quality and quantity design criteria are being met
    - Final analysis of potential downstream impact/effects of project, where necessary
    - Dam breach analysis, where necessary
- Maintenance plan which will include:
    - Name, address, and phone number of responsible parties for maintenance.
    - Description of annual maintenance tasks
    - Description of applicable easements
    - Description of funding source
    - Minimum vegetative cover requirements
    - Access and safety issues
    - Testing and disposal of sediments that will likely be necessary
- Waiver requests

Checklists for Construction Inspection

Construction Inspection Checklists for each of the approved Stormwater Treatment Practice are available in Appendix D of the Minnesota Stormwater Manual.

Bioretention – p.685
Media Filter System – p.687
Vegetative Filter System – p.689
Infiltration Trench – p.691
Infiltration Basin – p.693
Stormwater Pond/Wetland – p.695

Checklists for Operation & Maintenance

Operations & Maintenance Checklist for each of the approved Stormwater Treatment Practice are available in Appendix D of the Minnesota Stormwater Manual.

Bioretention – p.702
Media Filter System – p.704
Vegetative Filter System – p.706
Infiltration Trench – p.708
Infiltration Basin – p.708
Stormwater Pond/Wetland – p.710

Appendix A

Table 4: Infiltration Rates for Infiltration STPs

Corresponding Unified Soil Classification	Infiltration Rate (inches/hour)
GW – Well-graded or well-graded gravel with sand GP – Poorly graded gravel or poorly graded gravel with sand	1.63
GM – Silty gravel or silty gravel with sand SW – Well-graded sand or well-graded sand with gravel SP – Poorly graded sand or poorly graded sand with gravel	0.8
SM – Silty sand or silty sand with gravel	0.6
ML – Silt OL – Organic silt or organic silt with sand or gravel or gravelly organic silt	0.3
GC – Clay gravel or clayey gravel with sand SC – Clayey sand or clayey sand with gravel	0.2
CL – Lean clay or lean clay with sand or gravel or gravelly lean clay CH – Fat clay or fat clay with sand or gravel or gravelly fat clay OH – Organic clay or organic clay with sand or gravel or gravelly organic clay MH – Elastic silt or elastic silt with sand or gravel	<0.2

Source: Minnesota Stormwater Manual

2052 County Road 24 • Medina, MN 55340
(763) 473-4643

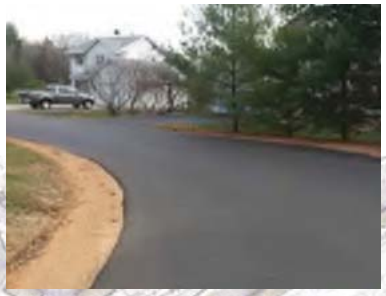

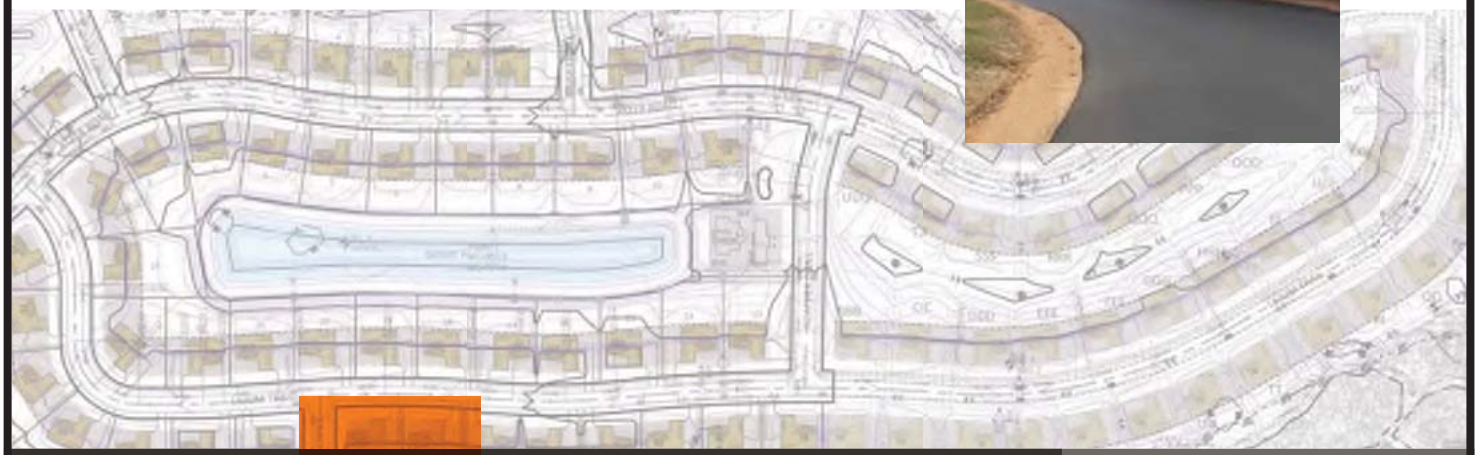

DESIGN MANUAL

2016

Plan Requirements, Design Guidelines, and Standard Detail Plates

TABLE OF CONTENTS

CERTIFICATION

I hereby certify that this plan, specification, or report was prepared by me or under my direct supervision and that I am a duly Licensed Professional Engineer under the laws of the State of Minnesota.

Jim Stremel, PE

Date: January 26, 2016 Lic. No. 45782

Tom Kellogg PE

Date: January 26, 2016 Lic. No. 26917

TABLE OF CONTENTS

Definition of Terms

Benchmark:	Shall mean a permanent or semi-permanent physical mark of known elevation. The elevation shall be tied to the USGS Sea Level Datum.
Builder:	Shall mean the person applying for and receiving a building permit to perform the work requested in said permit.
Building Official:	Shall mean the duly appointed Building Official of the City of Medina or his/her designated representative.
City:	Shall mean the City of Medina, Hennepin County, Minnesota. The City address is 2052 County Road 24, Medina, Minnesota 55340.
City Council or Council:	Shall mean the City Council of the City of Medina.
City Engineer:	Shall mean the duly appointed City Engineer of the City of Medina or his/her designated representatives.
City Planner:	Shall mean the duly appointed City Planner of Medina or his/her designated representatives.
Contract Documents:	Shall mean, unless the context provides otherwise, either a Development Contract entered into between the City and the Developer, or any Agreement existing between two or more persons, whether written or oral, setting forth the obligations of each party.
Contractor:	Shall mean, depending on the context, a person under contract with the City to perform labor or work for the City; or a person under contract with a Developer to install municipal improvements required by the subdivision regulations of the City.
Construction:	Is the total process of furnishing labor, material, and equipment to arrange and combine the parts into a completed project in accordance with the approved plans and specifications.
Developer:	Shall mean the person who has, or proposes to, execute a Developer's Agreement with the City of Medina for the purpose of subdividing or developing land within the City; and shall, where appropriate, include Developer, Developer's Engineer, Contractor Agents or Employees either individually or collectively.
City Inspector:	Shall mean duly appointed City Inspector of the City of Medina or his/her designated representatives.

Person:	Shall mean an individual, corporation, partnership, or any combination thereof.
Plans:	The approved drawings which include plan views, profiles, cross sections, working drawings, details, and supplemental drawings, or exact reproductions thereof, which show the location, character, dimensions, extent, limits and all else necessary to complete the work covered by the project.
Record Plans:	Shall mean the corrected or adjusted construction plans that accurately show the distances, elevations, dimensions, details and all other changes to reflect the actually completed work as constructed.
Specifications:	The body of written directives, provisions, and requirements made pertaining to the methods or manner of performing the work, the quantities, and the quality of materials to be furnished under the contract; and outlining the obligations and responsibilities of the parties to the contract; and setting forth the method of payment and the duration of the work.
Standard Plates:	Shall mean those detail drawings or plates prepared for and approved by the City of Medina. Such plates can be obtained at the Medina City Hall.
Approved Plat:	Shall mean a final plat that has been accepted by the City Council and is recorded at the Hennepin County Court House.
Site Inspection:	Observance of infrastructure construction to monitor compliance with the approved construction plans and City standards.
Warranty Period:	The period of time that the Developer warrants improvements to be free from defect, commencing from the time of written acceptance of those improvements by the City Engineer.
Freeze-thaw Cycle:	Freeze-thaw cycle shall mean one winter season, typically from November 1 through April 30.

General Engineering Requirements

As set forth in various sections of the City Ordinances, Developers of property within the City of Medina are required to submit plans and specifications for review and approval by the City.

The enclosed information provides design standards and detail plates for the design of infrastructure improvements, street, utility, site work construction, and general guidance as to which all submittals will be held. The City understands that there are exceptions to these rules; however, request for modifications shall be kept to a minimum and should only be requested under extreme circumstances.

Construction shall be conducted in accordance with approved plans and these standards. In any case where inconsistencies are present between the City standards, ordinances, or approved plans, the most restrictive shall apply.

If you have any questions, please contact the City Public Works Department at 763-473-8842 or WSB & Associates, Inc. at 763-287-8532.

Design Standards

This information has been prepared to assist Developers and Engineers in the planning and construction of public infrastructure in the City of Medina. It is not intended to be, nor should it be used as a specification for any improvement, but rather a guideline to be used in the preparation of such documents. The City Engineer will review and approve all plans.

Sanitary Sewer

The design and construction of sanitary sewer and sewer services shall conform to the most recent editions of "City Engineers Association of Minnesota Standard Utilities Specifications," "Recommended Standards for Wastewater Facilities" (Ten States Standards), or as modified herein, and the City's most recent Standard Detail Plates, general specifications, and Comprehensive Plan.

The Developer shall obtain all regulatory agency permits and approvals including, but not limited to, those from the Minnesota Pollution Control Agency and the Metropolitan Council (Environmental Services), and if necessary, the Minnesota Department of Transportation, Department of Labor and Industry, and Hennepin County prior to beginning of construction.

The following are specific requirements related to the design of sanitary sewer and sewer services:

1. Manholes, frames, and covers shall be Class 35 iron in accordance with ASTM Spec A-48. Both the surface of the frame and the cover shall have machine bearing surfaces with two concealed pick holes. The words "Sanitary Sewer" shall be stamped on the cover in 2-inch letters.

2. See City Standard Plates for specific manhole casting models and numbers.

3. Polyvinyl chloride pipe (PVC) shall be used for gravity sewers 8 inches in diameter through 24 inches in diameter and shall conform to ASTM Specification D-3034. Pipe shall be produced by a continuous extrusion process using Type 1, Grade 1 material as defined in ASTM Specification D-1784. SDR 35 pipe shall be used up to 18 feet in depth; SDR 26 shall be used in depths greater than 18 feet and up to 26 feet; DR-18 or pipe as approved by the City Engineer shall be used in depths greater than 26 feet.

4. All forcemain shall be Polyvinyl chloride pressure pipe (PVC) conforming to AWWA Standard C-900, or approved equal meeting the pressure class for watermain. The bell shall consist of an integral wall section with a factory-installed, solid cross section elastometric ring that meets the requirements of ASTM F-477.

5. Service connections shall be a minimum of 4-inch PVC Schedule 40 or SDR 26 sewer pipe installed in accordance with City Plate SER-01.

6. Service riser pipe shall be a minimum of 4-inch PVC Schedule 40 or SDR 26 sewer pipe installed in accordance with City Plate SER-02, where the main is PVC. Service risers are required when the mainline is greater than 14.5 feet in depth, or in areas of high water table. The service stub must be constructed to an elevation at which the end of the stub is not submerged in groundwater.

7. Foundation for pipe sewer shall meet the requirements of Mn/DOT Specification 3149B or 3149H depending on soil conditions (see City Plates BED-01).

8. Sanitary sewer manholes shall be outside of the street in boulevards or non-paved areas. Sanitary manholes located in the street must be approved by the City Engineer prior to construction. The minimum number of manholes structures shall be used to the greatest extent possible.

9. Maintain a minimum depth of 10.5 feet to invert on sanitary sewers whenever possible.

10. The maximum spacing between manholes for sewer mains is 400 feet.

11. All sanitary manholes shall be located within the public right of way or drainage and utility easements where necessary. The sanitary sewer should be designed to show the sewer line within the public right of way.

12. All manholes that are not within a maintained area will be marked by a sign mounted on a 4" x4" cedar post. The sign shall state "Manhole Marker" (see City Plate GEN-01).

13. Show or define access routes for maintenance purposes to all manholes and lift stations that are outside of public right of way (located within drainage and utility easements). Access routes shall be designed so that they are accessible by City maintenance vehicles. For design purposes, access routes shall have a 10% maximum grade (up to 15% for short distances as approved by City Engineer), maximum 2% cross slope, minimum horizontal curve radius of 50 feet and a minimum width of 12 feet. The City shall review and approve the final design of all access and maintenance routes prior to construction. Access easements shall be dedicated at the time of final platting to provide this access.

14. Manholes are required on the end of all mainline sewer stubs if the line will be active.

15. Ten feet of horizontal separation between the sanitary sewer and water main is required and a minimum 18-inch vertical separation in accordance with the Minnesota Department of Health (MDH).

16. Any connections to existing manholes shall either be core drilled with a water tight boot. No jack hammering or breaking of the structure with a maul is permitted. All connections to an existing system will require a manhole for access.

17. Drop manholes are required when pipe inverts are greater than 2 feet apart in elevation. No inside drops are allowed in manholes unless approved by the City Engineer.

18. If the sanitary sewer will be installed within private property, an easement shall be obtained. The easement shall be twice as wide as the depth of the sewer or a minimum of 20 feet in width, whichever width is greater.

19. The trunk sanitary sewer system shall be designed to promote a laminar flow through the sewer system. Junction manholes should be designed to limit the hydraulic head increase by matching flow lines and by providing appropriate angles of connection, typically greater than 90º. Angles of connection less than 90º are not allowed.

20. All sanitary sewer manholes shall be made with watertight materials to prohibit groundwater infiltration.

21. Any sanitary sewer manhole located within a designated or defined ponding and drainage easement, within 10 feet of a wetland boundary, or within 100-year floodplain boundary shall utilize a watertight casting (Neenah 1755E or approved equal, see City Plate SAN-07). A 6-inch wide (minimum) rubber sealer shall also be installed at each barrel joint on the exterior of the structure meeting ASTM C 877 (Type III) Standard Specifications for External Sealing Bands for Concrete Pipe, Manholes, and Precast Box Sections. In extreme conditions, as determined by the City Engineer, manholes shall be poly-lined.

22. Changing of pipe material is not allowed between manholes with the exception of drop manholes. At drop manholes, 20 feet of poly-lined, poly-wrapped DIP is required before the change of material.

23. The City requires all sanitary lines to be televised with a closed circuit digital video system. Any obstructions or defects shall be cleared or repaired and re-televised prior to approval. An electronically formatted copy of the televising video and a paper report must be submitted to the City for review and approval. Check with the City for current electronic formatting requirements.

24. If construction requires dewatering, a plan must be submitted to the City for review and approval prior to construction. This plan must show all locations of discharge and conform to all erosion and sediment control requirements set forth by the Minnesota Pollution Control Agency (MPCA).

25. All lift stations are required to be equipped with fall protection equipment and a double door hatch. In addition, the lift station will be required to be reviewed by the City for compatibility with the City's SCADA and control systems.

26. External and internal chimney seals shall be provided on all manholes as directed by the City Engineer (see City Plate SAN-01 through SAN-05). The external seals shall be Infi-Shield or approved equal:

External

- Multiple section seal system.
- Top section made of neoprene rubber.
- All other sections made of EPDM rubber, 60-mil minimum thickness, and 8-inch minimum height for extension sections.
- Mastic: ASCO ST-30, BIDCO C56, or approved equal.

Internal

- ESS Brothers Alignment Barrier (lineal low density polyethylene) or approved equal

27. In all locations deemed by the City Engineer to have turbulent sewer flows, the sanitary sewer manholes shall be lined with a HDPE lining for corrosion and scour resistance. The liner shall be supplied and constructed as per manufacturer specifications.

28. Sanitary manholes shall be completely lined with HDPE within three manholes of a dump structure, or as otherwise required (see City Plate SAN-01).

Sewer Services

1. Sanitary service lines greater than 4 inches in diameter shall be approved by the City Engineer based on the Minnesota State Plumbing Code.

2. Minimum grade of a 4 inch diameter service shall be 2.0% and 6 inch diameter service 1.0%.

3. Sewer and water services shall be extended past the right of way line up to the far edge of the drainage and utility easement line. This will allow future private utility extensions to be constructed within the drainage and utility easement. The property owner's plumber can then connect to the sewer and water service without having to cross the utility lines.

4. The end of all sanitary service stubs shall be plugged and marked with a metal marker, 4' above grade, and painted green (see City Plate SER-01).

5. Cleanouts are required at 100-foot intervals on sanitary sewer services, including the riser, and require a metal cap. The cleanout will be required to be adjusted to grade once finish grading operations are completed. All sanitary sewer cleanouts constructed in paved areas require the installation of a meter box cover (see City Plate SER-03). Whenever possible, the cleanout shall be placed at the right of way line or easement line. The cleanout cap shall be painted green.

6. Water services may be placed in the same trench as the sewer services provided that an 18-inch vertical clearance and a 36-inch horizontal clearance are maintained.

7. Sewer services shall be connected to a wye on the main. Service connections to manholes will not be allowed.

8. The minimum depth of the sanitary sewer service at the right of way or easement line shall be 10 feet unless approved by the City Engineer.

9. Sanitary sewer services are not allowed to cross over the top of the water main unless otherwise approved by the City Engineer.

10. Any services that have a depth at the main greater than 14.5 feet require a riser, unless otherwise approved by the City Engineer.

11. Services that have a property line elevation lower than the groundwater elevation require a 45° bend and riser. This riser shall start at the property line and extend into the property until the finish elevation is above the groundwater.

Water Main

The design and construction of water main and water services shall conform to the most recent editions of "City Engineers Association of Minnesota Standard Utilities Specifications," "AWWA Standards," "Recommended Standards for Water Works" (Ten States Standards), the latest "Minnesota Rural Water Association" specifications or as modified herein, and the City's most recent Standard Detail Plates, general specifications, and Comprehensive Plan. These comprehensive plans contain information that the design professional must incorporate in the design of public infrastructure within the City.

The Developer is responsible for obtaining all necessary regulatory agency permits and approvals including, but not necessarily limited to, those from the Minnesota Department of Health and if necessary, the Department of Labor and Industry (if applicable), the Minnesota Department of Transportation, and Hennepin County prior to the beginning of construction.

The following are specific requirements related to the design of water main and water services.

1. All water mains shall either be comprised of Polyvinyl chloride pressure pipe (PVC) conforming to AWWA Standard C-900 or DIP conforming to the requirements of AWWA Standard C-151 for the class of pipe indicated on the plans and in the specifications. The PVC bell shall consist of an integral wall section with a factory-installed, solid cross section elastometric ring that meets the requirements of ASTM F-477. For DIP, class 52 pipe shall be used at minimum. All DIP shall be poly-lined and encased in a poly-wrap conforming to the AWWA Standard C105 and shall have mechanical or push-on type joints.

2. All hydrant lead piping shall be ductile iron pipe in accordance with AWWA C-151 of the class shown on the plans. All hydrant lead pipe shall be poly-wrapped in accordance with AWWA C-105 furnished with standard thickness cement mortar lining conforming to AWWA C-104. All pipe shall have push-on joints as specified in AWWA C-111.

3. Hydrants shall be Waterous Pacer Model WB-67-250-PP installed in accordance with City Plate WAT-01 and shall comply with AWWA Standard C-502. Hydrants shall be equipped with two 4.5-inch steamer connections (pumper nozzles), national standard operating nut, 5-inch valve opening, 6-inch mechanical joint pipe connection, and 16-inch high traffic section. Nozzle caps shall be attached to hydrants with metal chains. All below grade hardware shall be stainless steel or Cor-Blue. Hydrants shall have an 8-foot bury depth. Hydrants shall have a bronze pilated upper washer and an epoxy coated lower washer. The hydrant boot shall be epoxy coated. The cross arm shall be constructed of bronze, the operating nut constructed of one piece, and the hydrant shall be equipped with a weather shield. Hydrant flags shall be a Hydrafinder Hydrant Marker or equal, 54 inches long, and 3/8 inches in diameter. Flags shall be a white fiberglass rod with four red reflective bands, without a bulb end. One flag shall be installed on the hydrant and another delivered to the City of Medina Central Maintenance Facility (600 Clydesdale Trail).

   In the event that high groundwater is anticipated, drain plugs shall be installed in the hydrant weep holes. The hydrant nozzles shall be painted blue, and the hydrant will be equipped with a stainless steel tag marked "PUMP AFTER USE."

4. Gate valve and box shall be resilient seat valves in accordance with City Plate WAT-02. Gate valves larger than 16 inches shall be equipped with gear reduction boxes.

5. Fittings shall be fusion-bonded epoxy coated (conforming to ANSI/AWWA C550 and C116/A21.116) and polywrapped (all joints taped) mechanical joint ductile iron in accordance with AWWA C-110. The thickness of the coating shall be 6-8 mils. Rubber gaskets for mechanical joints shall conform to AWWA C-111. All water main fittings, including valve boxes, shall be manufactured in either the United States or Canada unless approved by the City Engineer.

6. All restraints shall be fusion-bonded epoxy coated on the inside and outside according to ANSI/AWWA C550 and C116/A21.16. The thickness of the coating shall be 6-8 mils. All bolts and fasteners are to be fluorocarbon coated.

7. Tracer wire shall be laid with all PVC water mains and services, and shall be #12 AWG copper clad steel strand and rated for underground service in accordance with the latest edition of the Minnesota Rural Water Association specifications. The tracer wire shall be connected to all fire hydrants (see City Plate WAT-01).

8. The water main alignment shall follow the sanitary sewer alignment where practical with a minimum of 10 feet of horizontal separation.

9. All pipes and services shall be designed for a minimum of 7.5 feet of cover to the top of pipe. There shall be a minimum of 24 inches of vertical clearance, or 18 inches of vertical clearance with 4 inches of insulation, when crossing sanitary or storm sewer lines or services.

10. Minimum water main diameters shall be 8-inch for all properties and land uses unless otherwise approved.

11. Hydrants should be placed 5 feet from back of curb and centered on side lot lines (see City Plate WAT-01, STR-5B and 5C)

12. All connections to existing water mains shall be valved. Locate valves within the street surface where possible. A minimum of two valves are required at a 3-legged intersection and a minimum of three valves is required at a cross or 4-legged intersection, or as approved by the City Engineer. Valves should be placed in such a manner that a maximum of 20 lots are affected during a water shutoff. Maximum spacing of gate valves is 800 feet in residential areas and 500 feet in commercial areas. Proposed valve layouts that deviate from this standard must be reviewed by the City Engineer for approval.

13. All utilities that cross the water main shall cross at a 90º angle if possible, with a minimum angle of 45º for the crossing.

14. Dead-end lines shall be minimized by looping of all mains wherever practical. Where dead-end mains occur, a hydrant shall be installed at or near the end of the main for flushing purposes. All temporary and permanent dead ends shall be secured with a gate valve and hydrant.

15. Reaction blocking and Megalugs shall be used at all changes in direction and at all fittings.

16. All gate valves that are not within paved areas will be marked by a sign mounted on a 4" x4" cedar post. The sign shall state "Valve Marker" (see City Plate GEN-01).

17. Hydrants shall be placed at a height meeting City Standard Detail Plate requirements and at an elevation observing finished grades (see City Plate WAT-01).

18. Maximum hydrant spacing along a City street or right-of-way shall be 350 feet. Hydrants shall be located such that a 250-foot radius for fire protection is provided in proximity of single family residential construction. All other land uses shall be reviewed by the City Engineer and shall, at a minimum, conform to any and all applicable Fire Codes.

19. Locate hydrants at intersections, if practical.

20. Gate valves are required on all hydrant leads.

21. Hydrants or water services are not allowed on the inactive side of gate valves for temporary stubs.

22. Air relief valves, when required, shall have a valve prior to and after an air relief mechanism to allow replacement without shutting down the main.

23. If the water main is to be installed within private property, the easement shall be a minimum of 20 feet wide with the water main centered in the easement.

24. The City will maintain all water mains in public right of way and dedicated easements. The private property owner will maintain their own laterals, services, and appurtenances from the right of way or easement line.

25. Water mains, laterals, and/or services shall not be located within any defined or designated ponding easement.

26. All water main bolts are to be stainless steel, Cor-Blue, or an approved equal.

27. If construction requires dewatering, a plan must be submitted to the City for review and approval prior to construction. This plan must show all locations of discharge and conform to all erosion and sediment control requirements set forth by the Minnesota Pollution Control Agency (MPCA).

Water Services

1. Single family residences shall have a minimum 1.0-inch-diameter copper Type K or SDR 11, IPS, PE water service. For any services larger than 1.5-inch, the pipe material shall be PVC with tracer wire at a minimum size of 4 inches. Services greater than 200 feet in length and/or 1.5 inches in diameter must be reviewed and approved by the City (see City Plate SER-01).

2. Services shall be installed with stainless steel saddles such as Smith-Blair 372, Ford FS 303, Cascade CS22, or approved equal.

3. Corporation stops and curb stops shall be installed per City Plate SER-01.

4. All sewer and water services shall be extended past the right of way line up to the far edge of the drainage and utility easement line. This will allow future private utility extensions to be constructed within the drainage and utility easement. The property owner's plumber can then connect to the sewer and water service without having to cross the utility lines.

5. The curb stop shall be marked with a 6-foot steel fence post placed vertically with the top 4 inches painted blue and protruding 4 feet out of the ground. Only one continuous piece will be allowed from main to curb box or valve unless service is over 100 feet long. Services over 100 feet long shall have the connection located outside the roadway.

6. Water services may be placed in the same trench as the sewer services provided that an 18-inch vertical clearance (water service above) and a 36-inch horizontal clearance are maintained.

7. All curb boxes constructed in bituminous or concrete areas require the installation of a Neenah casting R-1914-B, Ford A-1, or approved locking equal.

8. A minimum of 8 feet of cover is required on all water services.

9. All curb boxes shall be adjusted to an elevation of 2 inches below finished grade.

Storm Sewer

Drainage facilities shall conform to the most recent editions of "City Engineers Association of Minnesota Standard Utilities Specifications," "MPCA's Minnesota Stormwater Manual" (Best Management Practices for Minnesota), "National Urban Runoff Program" (NURP), City of Medina's "Stormwater Design Manual", or as modified herein, and the City's most recent Standard Detail Plates, general specifications, and comprehensive plans. These comprehensive plans contain information that the design professional must incorporate in the design of a public infrastructure within the City.

The City encourages the use of low impact development (LID) storm water management practices.

The Minnehaha Creek Watershed District, Elm Creek Watershed Management Commission, Pioneer-Sarah Creek Watershed Management Commission, and City of Medina inspect and enforce erosion and sediment control practices on construction sites in the City of Medina. Be advised that the Watershed Districts may have requirements that go above and beyond what is listed in the City's requirements.

The Developer shall obtain all regulatory agency permits and approvals as required.

The following are specific requirements related to the development of drainage facilities:

1. All storm sewer and ponding areas must be designed in accordance with the City's "Stormwater Design Manual", excerpts are included below. If conflicting information exists, the most restrictive shall apply.

2. Manhole frames and covers shall be of the best grade of cast iron, free from all injurious defects and flaws and shall be Class 35 iron in accordance with ASTM Spec A-48. Each casting shall be sand blasted, but no further coating or finish is required. Both the surface of the frame and the cover shall have machine bearing surfaces with two concealed pick holes. The words "Storm Sewer" shall be stamped on the cover in 2-inch letters.

3. Reinforced concrete pipe (RCP) shall conform to the requirements of the Standard Specifications for Reinforced Concrete Sewer Pipe, ASTM Designation C-76 of the class designated on the plans and in the specifications. Pipe joints shall meet the requirements of ASTM Specification C-361 and shall be the Bureau of Reclamation Type R-4.

4. High performance polypropylene pipe, if allowed, shall be constructed in accordance with ASTM specification D2321. Prior written approval from the City Engineer is required for the use of polypropylene pipe. The pipe shall be bedded with coarse filter aggregate in accordance with Mn/DOT specification 3149H and manufacturer's recommended practices. Where this pipe is allowed, the aprons shall be a reinforced concrete apron.

5. Polyvinyl chloride (PVC) pipe, if allowed, shall be constructed in accordance with ASTM specification D-3034. Pipe shall be produced by a continuous extrusion process using Type I, Grade 1 material as defined is ASTM Specification D-1784. Prior written approval from the City Engineer is required for the use of PVC. PVC storm sewer will generally be limited to unpaved areas of minimal surface cover. Where PVC is allowed, core and seal manhole boots will be required.

6. High Density Polyethylene (HDPE), if allowed, shall be constructed in accordance with ASTM specification D2321. Prior written approval from the City Engineer is required for the use of polypropylene pipe. The HDPE pipe shall be bedded with coarse filter aggregate in accordance with Mn/DOT specification 3149H and manufacturer's recommended practices. Where HDPE is allowed, the aprons shall be a reinforced concrete apron. HDPE storm sewer will be allowed in easement or backyard applications.

7. Corrugated metal pipe (CMP), if allowed, shall be constructed in accordance with Mn/DOT Section 3226, Type I, 16 gauge material. Prior written approval from the City Engineer is required for use of CMP. CMP storm sewer will generally be limited to driveway culverts, temporary culverts, areas of extremely steep grade, soft and unusual trench conditions, pond outlet areas, etc. All CMP culvert applications are to have flared end sections installed.

8. Storm sewer pipe shall be bedded in accordance with City Plates BED-01 through BED-03, unless noted otherwise.

9. Flared end sections shall be reinforced concrete pipe with trash guards in accordance with City Plate STO-08. Aprons or flared end sections shall be placed at all locations where the storm sewer outlets to a ponding area. All aprons or flared end sections shall be tied to the next three (3) pipe sections (see City Plate STO-08). All trash guard installations will be subject to approval by the City Engineer.

10. Flared end sections 36 inches in diameter and larger shall include sheet piling. See City Plate STO-16 for a detail of an apron with sheet piling.

11. Riprap and filter blanket shall be placed at all outlet flared end sections. The placement of the riprap shall be hand placed. The minimum class of riprap shall be Mn/DOT 3601.2 Class III (see City Plate STO-09).

12. Junction manholes should be designed to limit the hydraulic head increase by matching hydraulic flow lines and by providing smooth transition angles.

Intersection angles shall be a minimum of 90 degrees.

13. Inlets will generally be required every 400 feet on streets or in combinations of streets and swales. Additionally, inlets should be located such that 3 cfs is the maximum flow at the inlet for the 10-year flood design storm event.

14. Minimum RCP cover in paved areas shall be 2.5 feet. In unpaved areas, the minimum cover shall be 2 feet.

15. Storm sewer shall be designed to maintain a self-cleaning pipe velocity. The minimum full flow velocity shall be 3 feet per second (fps). The maximum velocity shall be 10 fps, except when entering a pond, where the maximum velocity shall be limited to 6 fps or less.

16. Flared end sections shall not be used as inlets unless prior approval is granted.

17. The minimum surface grade in all unpaved areas shall be 2%.

18. Refer to the Standard Detail Plates for the types of castings to be used on the storm sewer structures. Catch basin castings shall be stamped with "Dump No Waste, Drains to Fresh Water", or approved equal.

19. Manholes shall be placed in paved surfaces wherever possible.

20. All manholes that are not within paved areas will be marked by a sign mounted on a 4" x4" cedar post. The sign shall state "Manhole Marker" (see City Plate GEN-01).

21. The storm alignment shall follow the sanitary sewer alignment where practical with a minimum of 10 feet of horizontal separation. Storm sewer placed along the curb shall be along the curb opposite the water main to maintain 10 feet of separation.

22. Catch basins shall be located on the tangent section of the curb at a point 5 feet from the return. Mid-radius catch basins will not be allowed. Catch basins shall be designed to collect drainage on the upstream side of the intersection.

23. Minimum pipe size shall be 15 inches in diameter unless otherwise approved.

24. The maximum spacing between manholes shall be 400 feet for sewer lines less than 24 inches in diameter, and 500 feet for sewer lines 24 inches to 30 inches in diameter. Maximum spacing on large diameter sewer lines shall be approved by the City Engineer.

25. Any connections to existing manholes or catch basins shall be core drilled or the opening cut out with a concrete saw. No jack hammering or breaking the structure with a maul is permitted. All connections to an existing system will require a manhole for access.

26. Outlet control structures from ponding areas are required as directed by the City Engineer.

27. Calculations and drainage area maps showing 10-year design and 100-year flood boundaries shall be submitted with the plans and specifications verifying the adequacy of the number of catch basins, pipe capacities, and pond sizes.

28. Storm water detention facilities constructed in the City of Medina shall be designed according to the most current technology as reflected in the MPCA's "Minnesota Stormwater Manual", and shall contain, at a minimum, the following design factors:

    - An average permanent pool depth of 4 to 10 feet. For ponds used as an irrigation water source, 6-foot minimum depth is required.

    - A permanent pool length-to-width ratio of 3:1 or greater.

    - A 10-foot-wide maintenance bench shall be provided with a slope of 10 feet horizontal to 1 foot vertical (10:1) and elevated above the normal water level.

    - Ponds are required to be lined with 1 foot of clay or other impermeable material.

    - A protective buffer strip of grasses surrounding the pond will be required (refer to current Mn/DOT specifications for applicable seed mixture). The minimum width of the buffer is 10 feet, or as required by the City Engineer.

    - Storm water detention facilities for new development must be sufficient to limit peak flows in each subwatershed to those that existed before the development for the 2, 10, and 100-year storm event (Atlas 14).

29. Provide for emergency overflow routes to drain low points along streets or lot lines to ensure a freeboard of 1 foot from the lowest opening elevation or 2 feet freeboard above the adjacent pond's calculated 100-year HWL elevation to the lowest floor opening, whichever is more restrictive. Street ponding shall not exceed a maximum depth of 3 feet at its deepest point. Design criteria verifying the adequacy of the overland drainage route capacity is required.

30. Stormwater and Ponding Easements

    - If a Developer's proposal involves directing some or all runoff off of the site, it shall be the responsibility of the applicant to obtain from adjacent property owners any necessary easements or other property interests concerning flowage of water. The City will assist in this process as appropriate.

    - Outlots are required for all ponding areas to the basin's 100-year storm HWL elevation. Ponding outlots are required to be seeded with grasses to the outlot boundaries (refer to most current Mn/DOT specifications for applicable seed

mixture). Easements are required for all inletted and outletted basins, swales, ditches, and overflow routes to the basin's 100-year storm HWL elevation.

- If the storm sewer is to be installed less than 10 feet deep within private property, the easement shall be a minimum of 20 feet wide with the pipe centered in the easement. If the storm sewer is 10 feet deep or greater, then the easement shall be twice as wide as the depth.

31. Show or define access routes for maintenance purposes to all manholes, inlets, and/or outlets at ponding areas that are outside of public right of way (located within drainage and utility easements). Access routes shall be designed so that they are accessible by City maintenance vehicles. For design purposes, access routes shall have a 10% maximum grade (up to 15% for short distances as approved by City Engineer), maximum 2% cross slope , minimum horizontal curve radius of 50 feet and a minimum width of 12 feet. The City shall review and approve the final design of all access and maintenance routes prior to construction. If necessary, access easements or outlots shall be dedicated at the time of final platting to provide this access.

32. In the development of any subdivision or ponding area, the Developer is responsible for the removal of all significant vegetation (trees, stumps, brush, debris, etc.) from any and all areas which would be inundated by the designated controlled water elevation (Outlet Elevation) of any required ponding easement as well as the removal of all dead trees or vegetation, etc., to the HWL of the pond.

33. All newly constructed and reconstructed buildings will route drain leaders to pervious areas wherein the runoff can be allowed to infiltrate. The flow rate of water exiting the leaders shall be controlled so no erosion occurs in the pervious areas.

34. The invert elevations of the pond inlet flared end sections shall be no lower than the Outlet Elevation of the pond. Submerged outlets will only be allowed at the discretion of the City Engineer.

35. No overland or channeled storm water may leave a development site in excess of the existing rate, unless the discharge is conveyed in the trunk system and is in accordance with the City's Surface Water Management Plan. The storm water in each phase of a development will need to be managed to this criteria and any interim storm water design for the development will need to meet this criteria.

36. If storm sewer installation requires dewatering, a plan must be submitted to the City for review and approval prior to construction.

37. Wetlands
    - The City of Medina exists within the boundaries of three unique watershed districts and each have specific wetland and management plans that specify buffer widths and standards for individual wetlands. The City has adopted the wetland rules and management plans of these three watershed districts and

serves as the Local Governing Unit (LGU) for the Wetland Conservation Act (WCA).

- A protective buffer strip of natural vegetation shall surround all wetlands (refer to current Mn/DOT specifications for applicable seed mixture or as otherwise directed by the City Engineer).

- Wetlands must not be drained or filled, wholly or partially, unless replaced by restoring or creating wetland areas in accordance with the "Minnesota Wetland Conservation Act" and other wetland regulations.

- Utilization of existing wetlands for storm water management is subject to review by the appropriate regulatory agency in accordance with the "Minnesota Wetland Conservation Act" and other wetland regulations.

- Wetlands shall be placed on outlots dedicated to the City with drainage and utility easements on the final plat. If an easement dedicated to the City is deemed sufficient to protect the wetland and preferable to an outlot, an easement shall be granted to the City. The dedicated outlot or easement shall include the wetland buffer area and/or the land within the wetland's modeled 100-year high water elevation, whichever is greater. Access easements/outlots to the wetland shall also be provided.

Grading/Erosion Control

The grading plans and erosion control systems shall conform to the most recent editions of MPCA's Minnesota Stormwater Manual" (Best Management Practices for Minnesota), "National Urban Runoff Program" (NURP), City of Medina's "Stormwater Design Manual", or as modified herein, and the City's most recent Standard Detail Plates and comprehensive plans. These comprehensive plans contain information that the design professional must incorporate in the design of a public infrastructure within the City.

The Developer shall obtain all regulatory agency permits and approvals as required, including, but not necessarily limited to, those from: the City of Medina, the Minnesota Pollution Control Agency, Army Corps of Engineers, Minnesota Department of Natural Resources, Minnesota Department of Transportation, appropriate watershed district(s), etc. prior to beginning of construction.

The Minnehaha Creek Watershed District, Elm Creek Watershed Management Commission, Pioneer-Sarah Creek Watershed Management Commission, and City of Medina inspect and enforce erosion and sediment control practices on construction sites in the City of Medina. Be advised that the watershed districts may have requirements that go above and beyond what is listed in the City's requirements.

The following are specific requirements related to the development of grading/erosion control plans for the proposed subdivision and adjacent land within 200 feet unless noted otherwise:

1. Grading/erosion control plans shall be designed and signed by a civil engineer or a land surveyor registered in the State of Minnesota.

2. Show existing and proposed storm sewer.

3. Show proposed borrow pits and stockpile areas.

4. Show lot corner elevations and bench marks utilized.

5. Existing contours shall be at 1-foot or 2-foot intervals to a mean sea level datum (dashed lines). The contours shall extend beyond the proposed plat boundaries 150 feet or more to completely show the limits of a drainage basin(s) not fully contained within the proposed plat.

6. Proposed contours shall be at 1-foot or 2-foot intervals to a mean sea level datum (solid lines).

7. Graded slopes may be a maximum of 33% and minimum of 2%.

8. Show ponds, wetlands, lakes, streams, marshes, or any other water bodies:

    - Show City of Medina's most recent Storm Water Management Plan Outlet Elevation and high water level (HWL) for ponds.

    - Show the Outlet Elevation and HWL for ponds and wetlands.

    - Show OHWL elevation and DNR pond number if applicable.

    - Storage volume proposed.

    - Drainage area boundaries.

    - Show and define areas that will be seeded and mulched, sodded (minimum of two rows behind the back of curb), or seeded with blanket. Common drainage swales must be seeded and blanketed or sodded. Specify seed type(s) on the construction plans.

9. Show existing and proposed building and driveway footprints. It is desirable to show the driveway location so that water/sewer services can be designed outside the limits of the driveway.

10. Show house pads with house style and lowest floor elevations, garage elevation, and walkout elevation. Include a legend for these items. Elevations must be in accordance with the requirements set forth in the City's Surface Water Management Plan.

11. Driveways shall be designed at a minimum grade of 2% and a maximum grade of

10%, unless otherwise approved by the City.

12. Show proposed temporary erosion control, including silt fence and heavy-duty silt fence locations. Heavy-duty silt fence is required around all ponding areas and wetlands. Silt fence is required in other areas as needed to keep any soil runoff within the property. Indicate the type and frequency of all inlet protection and traffic site access issues.

13. Show emergency overflow routes from all low points and ponds and show high point elevations along emergency overflow routes. Show directional flow arrows. Either sod or seed with fiber blanket shall be placed in these areas to protect from erosion.

14. Show removal of all trees and brush below the controlled water level that will be impacted from existing and newly created ponding areas. In the development of any subdivision or ponding area, the Developer is responsible for the removal of all significant vegetation (trees, stumps, brush, debris, etc.) from any and all areas which would be inundated by the designated controlled water elevation (Outlet Elevation) of any required ponding easement as well as the removal of all dead trees or vegetation, etc., to the HWL of the pond.

15. Show or define access routes for maintenance purposes to all inlets, outlets, manholes, and lift stations at ponding areas.

16. Show limits of clearing and grading. Also show protection for any existing vegetation to remain undisturbed.

17. Show 10-year and 100-year design drainage boundaries. Show acreage of each drainage area/watershed.

18. Erosion control shall at a minimum observe standards established in the following reports: “Protecting Water Quality in Urban Areas” (Best Management Practices for Minnesota), “National Urban Runoff Program” (NURP), the NPDES Phase II erosion control requirements for construction sites, and the “Stormwater Design Manual” for the City of Medina, or as modified herein.

19. Label all lot and block numbers.

20. Label all street names.

21. Show centerline street high point elevations every 100 feet and street grades.

22. Show typical lot detail indicating where lot and house elevations are.

23. Show typical street section.

24. Show drainage arrows at high points and major grade changes.

25. Show existing and proposed easements and outlots.

26. Wetland boundaries must be accurately shown along with the name of the person or company who delineated the wetland boundaries. The appropriate buffer strips shall also be shown on the plans.

27. A grading record plan is required to be submitted and reviewed by the City prior to the issuance of building permits.

28. A minimum of 36 inches of sod is required to be placed behind the back of curb in all locations. Where sidewalks and bike trails are located, one roll of sod is required on the outside of the walkway, and the entire boulevard between the walkway and curb will be sodded. A minimum of one roll of sod will be placed on each side of trails located outside of road ROWs.

29. A minimum of 6 inches of topsoil meeting MnDOT specification 3877, or approved equal, must be applied to all disturbed areas of the development prior to seeding or sodding. Topsoil is defined as the top horizon of soil that existed on the site prior to grading of the development and is capable of adequately supporting grass. Soil that is predominantly sand, gravel, or clay will not be considered topsoil. Alternatively, a mixture of 4-inches of topsoil and 2-inches of compost is acceptable provided the material has been mixed thoroughly.

30. If dewatering is required for grading, a plan must be submitted to the City for review and approval prior to construction.

31. Erosion blanket shall conform to Mn/DOT 3885 category 3 for semi-permanent blankets. Six-inch staples shall be utilized for anchoring the blanket.

32. A plan outlining the frequency and type of site inspections will be required for all erosion and sediment control related issues. In addition, emergency contact information is to be provided.

33. A description of all methods of construction site waste control shall be provided.

Streets/Trails

Streets shall conform to the most recent editions of "Mn/DOT Standard Specification for Highway Construction," "Mn/DOT Road Design Manual," "Minnesota Manual on Uniform Traffic Control Devices for Streets and Highways," or as modified herein, and the City's most recent Standard Detail Plates, general specifications, and comprehensive plans. These comprehensive plans contain information that the design professional must incorporate in the design of public infrastructure within the City.

The Developer shall obtain all regulatory agency permits and approvals as required including, but not necessarily limited to, those from: the City of Medina, the Minnesota Department of Transportation, Hennepin County, etc., prior to beginning of construction.

The following are specific requirements related to the design of street construction:

1. Street construction materials shall be in conformance with the Minnesota Department of Transportation Standard Specifications for Construction, 2005 Edition, and all subsequent revisions, except as specifically altered or modified herein.

2. Aggregate base shall be Class 5 meeting the requirements of Mn/DOT Section 3138, and which has a maximum Liquid Limit (LL) of 25 and a Plasticity Index (PI) of 0 to 3. Recycled aggregate material is allowed, but shall meet the requirements for Class 5.

3. Geotextile fabric shall be installed after completion and approval of subgrade if required by the City Engineer. Geotextile fabric shall meet MnDOT specification 3733 for a Type V fabric and be a non-woven fabric consisting of polymeric filament or yarns such as polypropylene, polyethylene, polyester, polyamide, or polyvinylidene chloride that is formed into a stable network such that the filaments or yarns retain their relative position to each other. The geotextile shall be inert to commonly encountered chemicals, and resistant to ultraviolet radiation. Fabric shall be manufactured by Tencate Mirafi (180N), or approved equal.

   All splices shall be seamed (sewed, glued, welded) to produce equivalent fabric strength. Fabric shall not be left exposed to the sun for a period in excess of 3 days. Rips shall be patched with fabric seamed to fit around the rip.

4. Bituminous material for mixture shall conform to Mn/DOT 3151 for asphalt cement AC-1 with 85/100 penetration. Aggregate shall meet the requirements of Mn/DOT 3139 for BA-1 wear course and BA-2 base/binder course.

5. Bituminous mixture shall conform to Mn/DOT 2360. See City Plates STR-05 and STR-06 for minimum pavement standards.

6. Bituminous Tack Material shall be in conformance with Mn/DOT Section 3151.2.E for Emulsified Asphalt.

7. Material for concrete curb and gutter shall be accordance with Mn/DOT Section 2531. Reinforcing rods are required in concrete valley gutters or curb crossing commercial driveways.

8. Subsurface drainpipe shall be 4-inch perforated, heavy duty, corrugated polyethylene pipe (MnDOT 3278) and installed at road low point catch basins. The pipe shall be extended a minimum of 50 feet in each direction parallel to the gutter line. If sump pump connections are required, 6-inch perforated pipe shall be used. See City Plate STO -19.

9. All local streets shall be designed to meet or exceed Mn/DOT standards for 30-mph vertical and horizontal curve data unless otherwise approved by the City. All

collector streets shall be designed to meet or exceed Mn/DOT standards for 40-mph design. Vertical curves shall be provided for all net grade changes greater than 1.00%.

10. Street design shall meet the general standards contained in the "Mn/DOT Road Design Manual" and applicable City standard details. Local streets shall be designed to a 7-ton minimum and collector streets to a 9-ton minimum.

11. Streets shall intersect at right angles (90°) unless otherwise approved by the City Engineer.

12. Barricades shall be placed on all dead-end streets and shall conform to the "Minnesota Manual on Uniform Traffic Control Devices."

13. "Future Through Street" signs per City Plate STR-22 shall be placed on all dead-end streets that will be extended to future development, or as directed by the City Engineer.

14. No street profile grade shall be less than 1.0%. The maximum allowable profile grade for a 30-mph design speed is 6% for flat topography and 7% for rolling topography. At intersections, the street profile grade shall not exceed 2.0% for the first 100 feet approaching the intersection unless otherwise approved by the City Engineer. The 100-foot approach is measured from the curb line of the intersected street.

15. In cul-de-sacs, the gutter grade shall not be less than 1.0%. A minimum 1.0% crown or minimum 2% cross slope grade, whichever is greater, is required for a cul-de-sac cross section.

16. Soil boring information shall be submitted to the City prior to the start of construction.

17. Removal and replacement of unsuitable subgrade materials will be subject to the recommendations of the soils engineer and the approval of the City.

18. Cul-de-sacs with islands are required on all "dead-end" public streets as shown on City Plate STR-07 or STR-08. Temporary "dead-end" situations associated with phased development do not require concrete curb and gutter along the radius of the cul-de-sac, but must be paved for snow plowing purposes. Temporary "dead-end" situations associated with providing access to adjacent undeveloped property require concrete curb and gutter installation.

19. New residential subdivisions will require surmountable curb and gutter as shown on City Plate STR-01.

20. A 20-foot minimum intersection radius shall be used on local streets. A 30-foot minimum intersection radius shall be used for collector roads, access points to

residential developments, or primary roadways through a development. Minimum grade around curb radii is 0.5%.

21. Concrete pedestrian curb ramps are required when sidewalks or pathways intersect with curbs. The ramp shall be constructed according to the latest applicable revision of City Plates STR-16 through 20, the latest edition of the MnDOT standard plates, and shall comply with current ADA Standards.

22. The design and construction of sidewalks and trails shall be in accordance with the City's Standard Detail Plates.

23. Street signs, stop signs, or other traffic control signage shall be installed by the Developer per the "Minnesota Manual on Uniform Traffic Control Devices" and the City's Standard Detail Plates.

24. Street lighting systems shall be installed at the Developer's expense and as approved by the City Engineer. Streetlights must be placed at a 300-foot maximum spacing and at an intersection. Street lights at intersections must be located so that street and/or stop signs are not obstructed. A street lighting plan must be provided to the City for review prior to construction.

25. The minimum bituminous thickness for parking areas shall be provided by a reputable geotechnical firm's evaluation based on geotechnical data obtained from the site.

26. The wear course shall be placed after the completed utility construction has gone through at least one freeze-thaw cycle. Dependent upon the level of completion of home construction in the area, additional time may be required before the wear course may be placed at the discretion of the City Engineer.

27. The City requires the determination of an R-value to be used in calculating the total granular equivalency (G.E.) of a street's design requirements. The R-value is a measure of embankment soil resistance strength expressed on a scale of 1 to 100.

28. Concrete valley gutter shall not be used unless approved by the City Engineer.

29. The design of streets shall accommodate a minimum 5-foot clear zone behind the curb where trails or sidewalks are proposed and a minimum 10-foot clear zone in areas without trails or sidewalks to provide for adequate sight distances and snow storage. The clear zone area will be the boulevard behind the curb (this area shall not contain any landscaping other than a ground cover or boulevard trees) and the area shall have a maximum 4% slope.

30. Retaining walls over 4 feet in height shall be designed by a Minnesota Registered Professional Structural Engineer. All retaining walls shall be maintained by the Homeowners Association. The construction of any retaining walls within the public right of way will need prior approval by the City Engineer. All retaining walls that need to be constructed in the public right of way shall be designed and constructed in

accordance with Mn/DOT Road Design Manual, Chapter 9, Section 4. All retaining walls in the public right of way shall be designed for an equivalent live load surcharge of 2 feet. Soil borings and a geotechnical report will be required for each wall.

For dry cast modular masonry retaining walls, all materials used shall be on the approved list of materials as maintained by the Mn/DOT Foundations Unit. All units shall have a minimum 28-day compressive strength of 5,800 psi and can withstand a minimum of 90 cycles of freeze-thaw durability testing done in accordance with ASTM C1262 in a 3% saline solution. The weight loss of each of the five specimens tested for freeze-thaw durability shall not exceed 1% after 40 cycles. Cap units shall have a 10% slope on the top surface. The exposed front face, top and backsides of the upper three courses of the walls shall be sealed with a surface sealer. The sealer shall be a product approved by the Mn/DOT Concrete Engineering Unit and listed on the Mn/DOT Concrete Engineering Unit website. The retaining wall construction will require the submittal of details, plans, and specifications for review by City staff.

31. The design and construction of sidewalks and trails shall conform to the City's Standard Detail Plates and City ordinances. Concrete walks shall be 5 feet wide and bituminous trails shall be 8 feet wide.

32. Horizontal curves on local streets with concrete curb and gutter shall be designed to ensure a horizontal sight distance of not less than 200 feet.

33. Materials used for trail and sidewalk construction shall be as outlined above under "Streets." Materials required include aggregate base, concrete, bituminous, seed, sod, and related miscellaneous items (see City Plate STR-19).

34. The Developer shall establish turf and shall control all erosion in park areas and outlots. The Developer shall maintain turf and erosion control measures until all disturbed areas are thoroughly established and protected from erosion as determined by the NPDES permitting and/or watershed district.

35. No residential driveway shall be permitted within 50 feet of the end of the radius of an intersection of any collector street or other local street.

36. Residential driveways shall be constructed at a minimum of 12 feet and a maximum of 24 feet in width (see City Plates STR-10 through STR-13). The minimum sloe shall be 2.0% and maximum 10%.

37. Concrete sidewalk through driveways shall be 6 inches thick.

Construction Plan Standards

In order to standardize construction and achieve uniformity, the guidelines listed below shall be followed.

General Requirements

1. All sheets shall be 22 inches by 34 inches in size. Upon approval of the plans, three full-size and three half-size paper sets shall be submitted to the City.

2. A standard title sheet shall be prepared for each project plan set. Each plan sheet shall be clearly labeled with sheet number, City project number, City project name, identification of improvements, and other appropriate information. The title sheet shall include a signature block for the City Engineer that reads "Reviewed by City Engineer."

3. A location plan shall be prepared on the title sheet, at a legible scale, indicating the entire project. An index of the construction plan sheets involved with the work and their location within the project shall be shown on the title sheet.

4. All detail drawings shall be on a separate sheet or sheets, and referenced to the proper plan sheet. City Standard Plates shall be utilized whenever feasible.

5. Scale (as appropriate) – Horizontal Scale: 1 inch = 50 feet and Vertical Scale: 1 inch = 10 feet.

6. All parcels shall be properly labeled with lot and block numbers and plat name, or parcel identification numbers (PIN) in unplatted areas.

7. All streets shall be clearly labeled.

8. All match line breaks shall be clean with reference points clearly marked. All plan views which are broken by a match line shall be on the same or consecutive sheets if possible.

9. Existing utilities (sanitary sewer, water main, storm sewer, etc.) shall be shown, stationed, and labeled as existing.

10. Locations of existing gas, electric, cable TV, and telephone lines shall be shown.

11. Right of way and pavement or curb and gutter alignment data shall be shown.

12. All plans shall have properly placed north arrows for each plan sheet. Whenever possible, the north arrows should point up or to the left of the sheet.

13. Benchmarks shall be placed on all plan and profile sheets. A minimum of two benchmarks shall be provided.

Specific Requirements

1. The following utilities shall be located as indicated below, to the extent practical:

   - Sanitary Sewer – structures within boulevard, see Sanitary Sewer section.
   - Water Main – 10 feet north and east of centerline.
   - Storm Sewer – under the south and west curb line.

2. The profile shall be directly below the plan, on the same sheet, with the stationing aligned as closely as practical. Stationing shall be shown on the plan view as well as on the profile.

3. All sanitary and storm sewer manholes, flared end sections, and hydrants shall be numbered in both plan and profile views.

4. All hydrants, gate valves, and fittings shall be stationed on the bottom of the profile. All hydrants shall be installed to the proper height and location as referenced above under "Water Main" and as indicated in City Plate WAT-01.

5. All sanitary services shall be drawn on the plan to the constructed length and the size and type noted. If risers are placed, the height of each riser shall be indicated on the plans and each riser shall be drawn on the profile view to scale. Indicate if jacked and the size of the casing. Stationing of sanitary sewer wyes shall be indicated by an "S" in front of the stationing.

6. On combination sewer and water projects, services should be located in the same trench with the sanitary sewer service line placed a minimum of 3 feet downstream of the water service line.

7. If sanitary sewer wye only is constructed, it shall be noted as "Wye Only" after stationing.

8. All water services shall be drawn to constructed length. Indicate if jacked.

9. Storm sewer plans shall indicate boundary or limits of ponding easements, pond outline, normal water elevation, high water elevation, acre-feet of storage, discharge rate of flow, and outlet control device for each pond.

10. A minimum of two benchmarks must be included within the construction plans.

11. All top of hydrant nut elevations must be shown.

12. A storm sewer schedule must be included with the construction plans. Include the structure number, size of structure, and proposed casting number in the schedule. Include all skimmer structures, flared end sections, and sumps in this schedule.

13. Utility crossings shall be shown in the plan and profile views.

14. Show flow direction arrows in the plan section of the plan and profile.

15. The approximate invert elevation at the end of all sanitary sewer service stubs (tails) shall be shown on the plans.

16. All water fittings should be labeled as to size and type such as bends, tees, plugs, etc.

17. The size and type of all sanitary sewer and water services shall be noted on the plans.

18. All sewer and water main shall be shown in the profile with the appropriate information such as size, length, material type and class, existing and proposed surface elevations, rim elevations, invert elevations with size and direction in brackets, etc. Storm sewer plans should be on a separate sheet from sanitary sewer and water.

19. Storm sewers shall be shown on the plan and profile on the sanitary sewer and water main sheets in a different line weight. The water main and sanitary sewer shall be shown on the plan and profile on the storm sewer sheets in different line weights.

20. If storm sewer bends are utilized, provide stationing for the beginning and end points of the bends. Provide the radius of the bend utilized.

21. The utility construction plans and street construction plans shall show the centerline stationing.

22. Each street plan sheet shall show right of way width, street width (face of curb to face of curb), typical street section utilized, and a typical radius dimension at intersections.

23. Proposed horizontal and vertical alignment data shall be shown on the street plan sheets.

24. The street construction plans shall show directional arrows for drainage. High points shall be labeled as such.

25. A plan shall be provided showing proposed locations for the saw and seal procedure. Manholes, gate valves, catch basins, etc. shall be included for review.

26. Plans for temporary and permanent erosion and sediment control are to be provided. These plans shall be on separate sheets unless otherwise approved by the City Engineer.

27. Show ponds, wetlands, lakes, streams, or marshes.

- Show City of Medina's most recent Storm Water Management Plan watershed number, Outlet Elevation, and HWL for ponds.
- Show OHWL elevation and DNR pond number if applicable.
- U.S. Fish & Wildlife classification if applicable.
- Show proposed pond storage volume.
- Show original bottom elevation.

28. Construction sheets must also be submitted for landscaping, street lighting, and project signage.

Record Plan Requirements

Record plans are required for all public and private improvements.

After completion of public or private improvements, the Developer shall provide the City Engineer with two full size (22”x34”) and three half size (11”x17”) scalable paper sets of record drawing plans of the project for review purposes.

Upon final approval of the record drawing plans, the Developer shall provide the City Engineer with one full-size set (22 inches by 34 inches) of reproducible mylar copies, two full size, and three half size paper sets of the approved record drawing plans of the project. All record plans shall be mylar sepias from inked and clearly legible drawings, accurately drawn to scale. Proper notes and statements as specified in the City’s Engineering Guidelines shall be placed on the plans.

The Developer shall also provide the City with the approved record plan drawings on disk or other electronic format; the City approved format as follows:

Electronic Record Plans

1. Required on compact disc or other electronic file format mailed to the City Engineer.

2. All plan sheets shall be submitted to the City. All information must be in the most current City electronic format (verify with City). In addition, all plan sheets shall be submitted in a format the can be read by Adobe Acrobat (PDF files) and CAD based files shall be provided of the public utility information to be incorporated into the City’s GIS system.

3. Approved final plat sheets submitted in Hennepin County coordinates.

4. Record plan construction plan sheets shall have either descriptive layer names or a key describing the layer names.

5. The symbol identifying the location of structures including, but not limited to: hydrants, gate valves, manholes, catch basins, skimmers or other pollution control devices, catch basin manholes, flared end sections, etc., shall each be unique blocks and each type of structure shall be contained on a unique layer within the drawing. The block files shall be included on the same disc with the electronic record plan submittal.

6. The pond bottom elevation, outlet elevation (OE), and the high water level (HWL) for all ponds shall each be drawn as closed polylines on unique layers named for the respective elevation. For example, the layer for an OE polyline at an elevation of 902 would be named “902.”

7. Overall development plan with all utilities (curb stops, cleanouts, MHs, FES, CBs, GVs, etc.) in Hennepin County coordinates.

8. Show any Hennepin County monuments that were used for the survey.

9. GIS mapping coordinates shall be provided for incorporation into City GIS system. After completion of construction, all manholes, catch basins, hydrants, and other elements of the project shall be re-measured as part of a record plan field survey. The plans shall be corrected and modified to show the correct distances, elevations, dimensions, and any other change in the specific details of the plans. All changes and modifications on the record plan shall be drawn to scale to accurately represent the work as constructed. Incorrect elevations, distances, etc. shall be crossed out from the original plan sheets and corrected as necessary to complete the record plan. Do not remove the proposed elevations from the plan sheets.

At a minimum, record plans shall include:

General

1. All construction contractor names should be noted on each page.

2. Record Plan stamp with date should be shown on each page.

3. All ties should be less than 100 feet wherever practical.

Grading Plan

1. Existing ground elevations at all lot corners.

2. Spot elevations at all house pads (hold down elevations).

3. Spot elevations of pond bottom (50-foot maximum grid).

4. Drainage and utility easement and outlot spot elevations.

5. Pond water elevations and date taken.

6. Prior to close out, record plans of ponding areas must be done to verify depths after house construction is complete.

NOTE: The record grading plan does not replace the approved grading plan. This plan is merely a tool to observe the grading of the area prior to home construction. The approved grading plan will still be utilized for all home construction purposes.

Sanitary Sewer, Water Main

1. Record plan elevations (invert and rims), pipe lengths, and grades for all lines.

2. Note describing pipe type and size for each run and for services.

3. Wye stationing from TV reports.

4. Elevation of riser.

5. Cross out proposed elevations and write record plan above – DO NOT remove proposed elevations from plans.

6. All curb boxes and sanitary sewer service cleanouts shall be tied with at least two ties, using the following priorities:

   - Fire hydrants.
   - Manholes.
   - Catch basins.
   - The building or structure being served, with address.
   - Neighboring structures, with the address noted.
   - Buildings or other permanent structures (bridges, telephone boxes, pedestals, transformers, etc.).
   - Power poles, streetlights, etc.

7. All water main gate valves shall be tied with at least two ties, using the following priorities:

   - Fire hydrants.
   - Manholes.
   - Catch basins.
   - Neighboring structures, with the address noted.
   - Buildings or other permanent structures (bridges, telephone boxes, pedestals, transformers, etc.).
   - Power poles, streetlights, etc.

8. Record plan elevations of each hydrant at top nut.

9. Any deviations of fittings from those shown on the plan.

10. Note describing pipe type and size for mainline and for services.

11. Stationing of corporation stop on water main.

12. Irrigation box and line locations within public right of way.

<u>Storm Sewer</u>

1. Record plan elevations (invert and rims), pipe lengths, and grades for all lines.

2. Note describing pipe type and size for each run.

3. Cross out proposed elevations and write record plan above – DO NOT remove proposed elevations from plans.

4. Ties to all storm sewer bends, if utilized. Ties shall be provided to the beginning and end points, using the following priorities:

   - Fire hydrants.
   - Manholes.
   - Catch basins.
   - Neighboring structures, with the address noted.
   - Buildings or other permanent structures (bridges, telephone boxes, pedestals, transformers, etc.).
   - Power poles, streetlights, etc.

5. Record plans on all ponding areas are required. Plans shall indicate finished contours at 2-foot intervals, normal water elevation, high water elevation, and the acre-feet of storage for each ponding area along with the final storm sewer plans. Upon completion of pond construction, ponds shall be cross-sectioned to confirm that they have been constructed to the proper volume and shape. Record plans shall be prepared for all ponding areas just prior to project acceptance.

Streets

1. Elevation of centerline (100-foot spacing).

2. Show where fabric has been placed in the streets on the plan portion of the record plans.

3. Show any areas where subgrade correction was needed, type of correction, and the size of the corrected area. Include ties to nearby structures.

4. Show location of all draintile on the plans.

5. Show streetlight locations.

Signage Requirements

Street Name Signs

1. All street name signs shall conform to City Plate GEN-05.

Regulatory and Advisory Signs

All regulatory and street signs shall conform to the latest edition of the "Minnesota Manual of Urban Traffic Control Devices" (MUTCD) and the Minnesota Department of Transportation (Mn/DOT) Standard Sign Summary. These signs include:

1. Stop Sign – Per sign designation R1-1 (30" x 30").
2. Yield Sign – Per sign designation R1-2 (36" x 36" x 36").
3. 4-Way or All-Way – Per sign designation R1-3 (12" x 6") and R1-4 (18" x 6"), respectively.
4. Cross Traffic Sign – Per sign designation R1-X2 (24" x 18").
5. Speed Limit Sign – Per sign designation R2-1 (24" x 30").
6. No Parking Sign – Various sign designation (12" x 18")
7. Turn Sign – Per sign designation W1-1 (30" x 30").
8. Tee Intersection Sign – Per sign designation W1-7 (48" x 24").
9. Chevron Sign – Per sign designation W1-8 (18" x 24").
10. Blind Intersection Ahead Sign – Per sign designation W2-X1 (36" x 36").
11. Stop Ahead Sign – Per sign designation W3-1a (30" x 30").
12. Yield Ahead Sign – Per sign designation W3-1b (30" x 30").
13. Steep Hill Sign – Per sign designation W7-1 (30" x 30").
14. Steep Hill Sign for Bicycles – Per sign designation W7-5 (18" x 18").
15. Pavement Ends Sign – Per sign designation W8-3 (30" x 30").
16. Rough Road Sign – Per sign designation W8-8 (30" x 30").
17. Deer Crossing Sign – Per sign designation W11-3 (36" x 36").

18. Horse Crossing/Share the Road – Per sign designation W11-7 (30" x 30").

19. Advisory Speed Sign – Per sign designation W13-1 (18" x 18").

20. Dead End Sign – Per sign designation W14-1 (30" x 30").

21. School Sign – Per sign designation S1-1 (30 Pentagon).

Other signs may be needed based on the circumstances found. In these cases, appropriate signage shall be as recommended by the City Engineer.

APPENDIX G
Standard Details

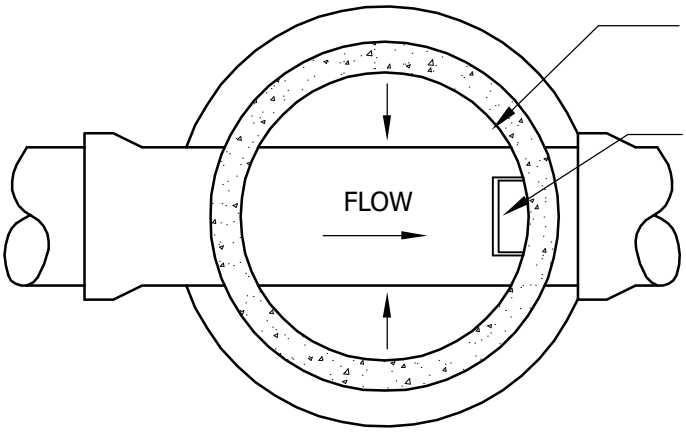

GROUT BOTTOM OF MANHOLE TO 1/2 DIAMETER AT PIPE AND SLOPE GROUT 2" TOWARD INVERT.

MANHOLE STEPS SHALL BE PLACED SO THAT OFFSET VERTICAL PORTION OF CONE IS FACING DOWNSTREAM.

CASTING	A	B
R1642B	27"	7"

PLAN

MORTAR SHALL BE PURE PORTLAND SPECMIX OR APPROVED EQUAL.

NEENAH FRAME AND COVER OR EQUAL, LETTERED "STORM SEWER", WITH 2 CONCEALED PICK HOLES.

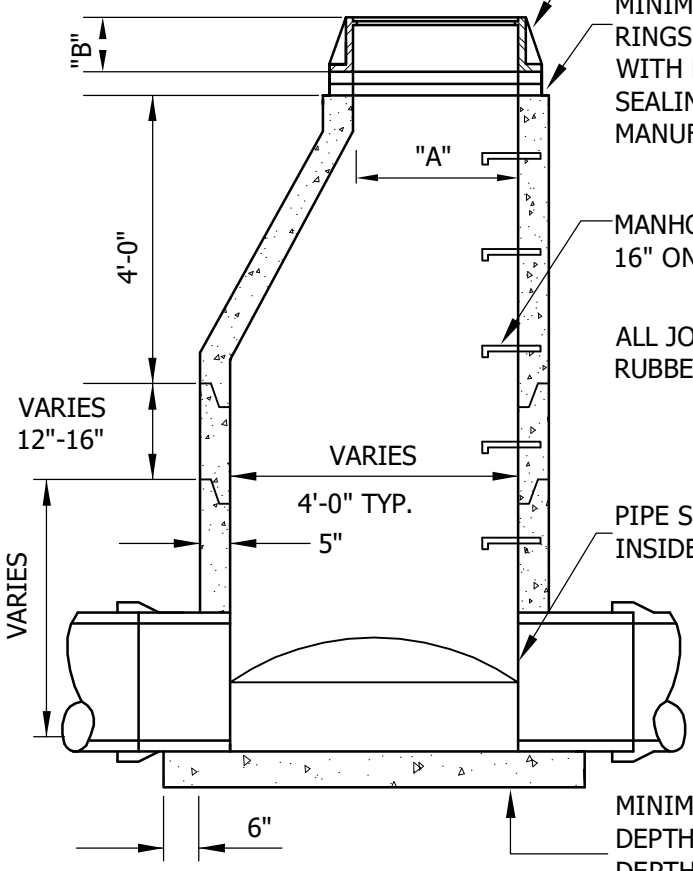

MINIMUM OF 2 AND MAXIMUM OF 5 CONCRETE ADJUSTMENT RINGS WITH FULL BED OF MORTAR BETWEEN EACH. 1 RING WITH MORTAR = 0.2'. INSTALL EXTERNAL INFI-SHIELD SEALING SLEEVE OR APPROVED EQUAL. INSTALL PER MANUFACTURE'S RECOMMENDATIONS.

MANHOLE STEPS, NEENAH R1981J OR EQUAL, 16" ON CENTER. ALUMINUM STEPS APPROVED.

ALL JOINTS IN MANHOLE TO HAVE "O" RING RUBBER GASKETS.

PIPE SHALL BE CUT OFF FLUSH WITH INSIDE FACE OF WALL.

MINIMUM SLAB THICKNESS IS 6" FOR STRUCTURE 14' IN DEPTH OR LESS. INCREASE THICKNESS 1" FOR EVERY 4' OF DEPTH GREATER THAN 14' AND REINFORCE WITH 6" X 6" MESH.

SECTION

CITY OF MEDINA

STORM SEWER MANHOLE

LAST REVISION:
JAN 2016

PLATE NO.
STO-01

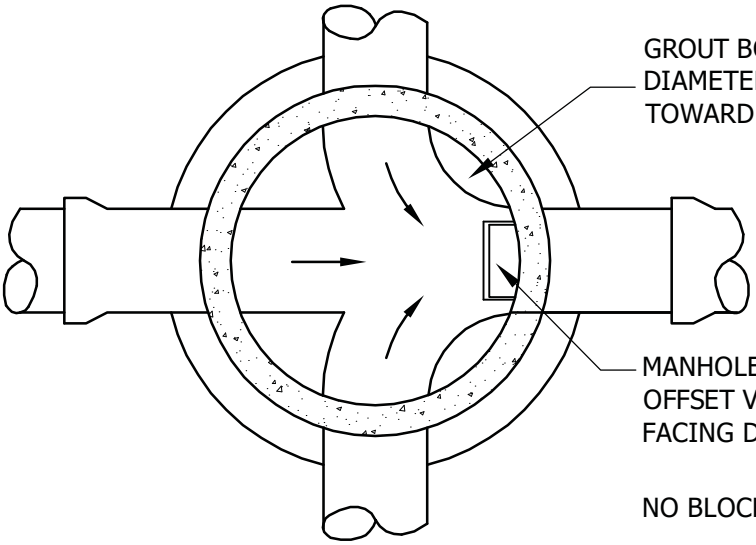

PLAN

GROUT BOTTOM OF MANHOLE TO 1/2 DIAMETER AT PIPE AND SLOPE GROUT 2" TOWARD INVERT.

CASTING	A	B
R1642B	27"	7"

MANHOLE STEPS SHALL BE PLACED SO THAT OFFSET VERTICAL PORTION OF CONE IS FACING DOWNSTREAM.

NO BLOCK STRUCTURES ARE ALLOWED.

MORTAR SHALL BE PURE PORTLAND SPECMIX OR APPROVED EQUAL.

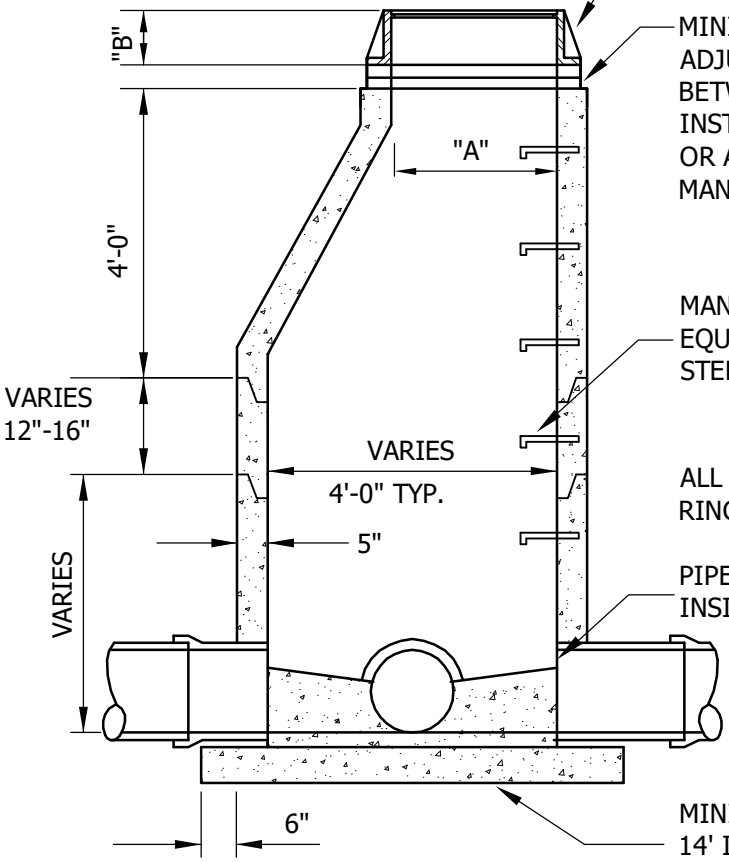

SECTION

NEENAH FRAME AND COVER OR EQUAL, LETTERED, "STORM SEWER", WITH 2 CONCEALED PICK HOLES.

MINIMUM OF 2 AND MAXIMUM OF 5 CONCRETE ADJUSTMENT RINGS WITH FULL BED OF MORTAR BETWEEN EACH. 1 RING WITH MORTAR = 0.2'. INSTALL EXTERNAL INFI-SHIELD SEALING SLEEVE OR APPROVED EQUAL. INSTALL PER MANUFACTURER'S RECOMMENDATIONS.

MANHOLE STEPS, NEENAH R1981J OR EQUAL, 16" ON CENTER. ALUMINUM STEPS APPROVED.

ALL JOINTS IN MANHOLE TO HAVE "O" RING RUBBER GASKETS.

PIPE SHALL BE CUT OFF FLUSH WITH INSIDE FACE OF WALL.

MINIMUM SLAB THICKNESS IS 6" FOR STRUCTURES 14' IN DEPTH OR LESS. INCREASE THICKNESS 1" FOR EVERY 4' OF DEPTH GREATER THAN 14', AND REINFORCE WITH 6" X 6" 10/10 MESH.

CITY OF MEDINA

STORM SEWER JUNCTION MANHOLE

LAST REVISION: JAN 2016

PLATE NO. STO-02

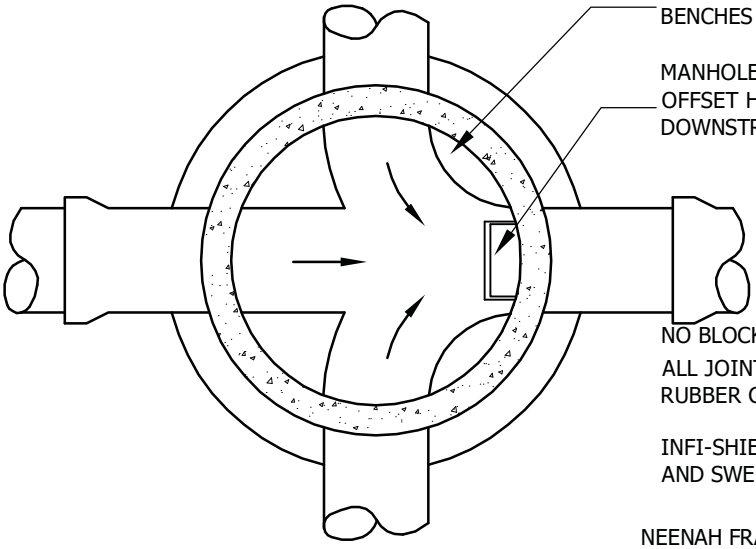

PLAN

PRECAST INVERT SHOULD BE 1/2 DIAMETER OF PIPE AND BENCHES SLOPED 2" TOWARD INVERT.

MANHOLE STEPS SHALL BE PLACED SO THAT OFFSET HOLE IN TOP SLAB IS FACING DOWNSTREAM.

CASTING	A	B
R1642B	27"	7"

NO BLOCK STRUCTURES ARE ALLOWED.

ALL JOINTS IN MANHOLE TO HAVE "O" RING RUBBER GASKETS.

INFI-SHIELD AROUND TOP SLAB. CLEAN AND SWEEP SURFACE BEFORE RAMNECK

NEENAH FRAME AND COVER OR EQUAL LETTERED, "STORM SEWER", WITH 2 CONCEALED PICK HOLES.

FOR 6' DIAMETER MANHOLE AN 8" PRECAST SLAB IS REQUIRED.

PIPE SHALL BE CUT OFF FLUSH WITH INSIDE FACE OF WALL.

MORTAR SHALL BE PURE PORTLAND SPECMIX OR APPROVED EQUAL.

MINIMUM OF 2 AND MAXIMUM OF 5 CONCRETE ADJUSTMENT RINGS WITH FULL BED OF MORTAR BETWEEN EACH. 1 RING WITH MORTAR = 0.2'. INSTALL EXTERNAL INFI-SHIELD SEALING SLEEVE OR APPROVED EQUAL. INSTALL PER MANUFACTURER'S RECOMMENDATION.

TOP OF BARREL SECTION BELOW TOP SLAB TO HAVE FLAT TOP EDGE SEALED WITH 2 BEADS OF RAMNEK OR EQUAL.

INSTALL INFI-SHIELD, GATOR WRAP, OR APPROVED EQUAL. INSTALL PER MANUFACTURER'S RECOMMENDATION.

6" PRECAST REINFORCED CONCRETE MANHOLE SLAB WITH #4 BARS AT 5" O.C. EACH WAY AND 2-#4 BARS AT ALL SIDES OF OPENING.

MANHOLE STEPS, NEENAH R1981J OR EQUAL, 16" ON CENTER. ALUMINUM STEPS APPROVED.

DOGHOUSES MUST BE GROUTED BOTH INSIDE AND OUTSIDE.

MINIMUM SLAB THICKNESS IS 6" FOR STRUCTURES 14' IN DEPTH OR LESS. INCREASE THICKNESS 1" FOR EVERY 4' OF DEPTH GREATER THAN 14', AND REINFORCE WITH 6" X 6" 10/10 MESH.

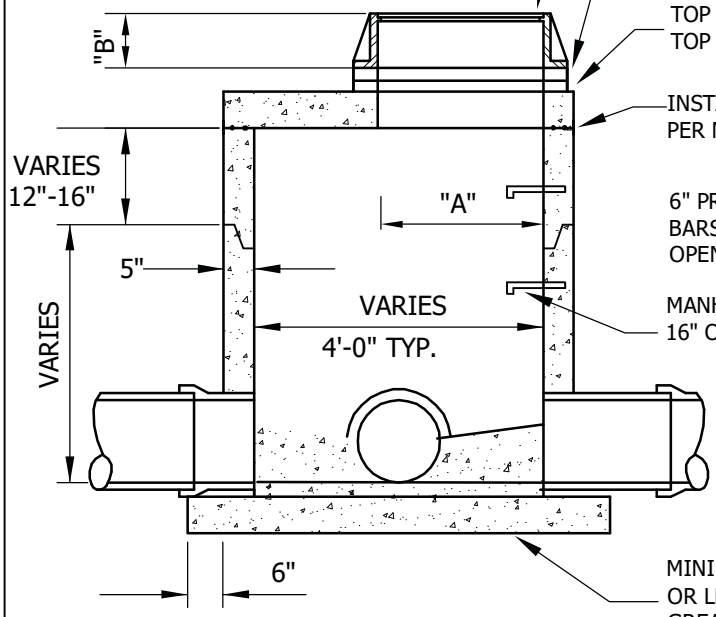

SECTION

CITY OF MEDINA

STORM SEWER JUNCTION MANHOLE WITH REINFORCED TOP SLAB

LAST REVISION:
JAN 2016

PLATE NO.
STO-03

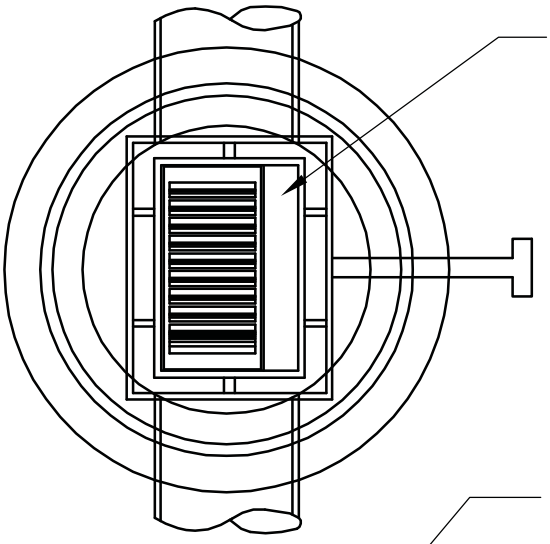

PLAN

24"X36" SLAB OPENING FOR NEENAH R3067V (ON CONTINUOUS GRADES) OR R3067VB (AT LOW POINTS) OR EQUAL
ENVIRONMENTAL NOTICE ON CASTING "DUMP NO WASTE, DRAINS TO FRESH WATER"

DIMENSION FROM BACK OF CURB TO CENTER OF PIPE. 4' DIA. MH - 9" IN FROM BACK OF CURB 5' DIA. MH - 3" IN FROM BACK OF CURB 6' DIA. MH - 3" BEHIND BACK OF CURB 7' DIA. MH - 9" BEHIND BACK OF CURB 8' DIA. MH - 15" BEHIND BACK OF CURB

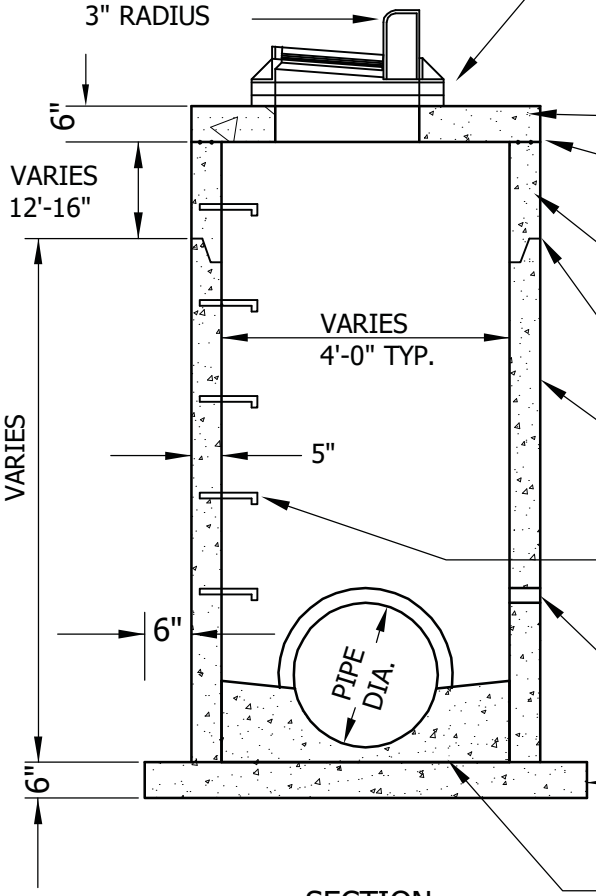

SECTION

MINIMUM OF 2 AND MAXIMUM OF 5 NO BLOCK STRUCTURES ARE ALLOWED. CONCRETE ADJUSTMENT RINGS WITH FULL BED OF MORTAR BETWEEN EACH RING, 1 RING W/MORTAR=0.2'; MAX. HORIZONTAL OFFSET=0.25'(3"). INSTALL EXTERNAL INFI-SHIELD SEALING SLEEVE OR APPROVED EQUAL. INSTALL PER MANUFACTURER'S RECOMMENDATION.

6" PRECAST REINFORCED CONCRETE SLAB.

INSTALL INFI-SHIELD GATOR WRAP, OR APPROVED EQUAL. INSTALL PER MANUFACTURER'S RECOMMENDATION.

TOP OF BARREL SECTION UNDER TOP SLAB TO HAVE FLAT TOP EDGE SEALED WITH 2 BEADS OF RAMNEK OR APPROVED EQUAL.

ALL JOINTS IN MANHOLE TO HAVE "O" RING RUBBER GASKETS.

PRECAST CONCRETE SECTION DOGHOUSES SHALL BE GROUTED ON BOTH THE OUTSIDE AND INSIDE.

MANHOLE STEPS, NEENAH R1981J OR EQUAL, 15" O.C., ALUMINUM STEPS APPROVED. INSTALLED ON STREET SIDE OF STRUCTURE.

HOLE FOR 4" PVC DRAINTILE CONNECTION.

MINIMUM SLAB THICKNESS, 6" FOR STRUCTURES 14' IN DEPTH. INCREASE THICKNESS 1" FOR EACH 4' OF DEPTH GREATER THAN 14', AND REINFORCE WITH 6"X6" 10/10 MESH.

GROUT BOTTOM
MORTAR SHALL BE PURE PORTLAND SPEC MIX OR APPROVED EQUAL.

CITY OF MEDINA

CATCHBASIN MANHOLE TYPE I

LAST REVISION:
JAN 2016

PLATE NO.
STO-04

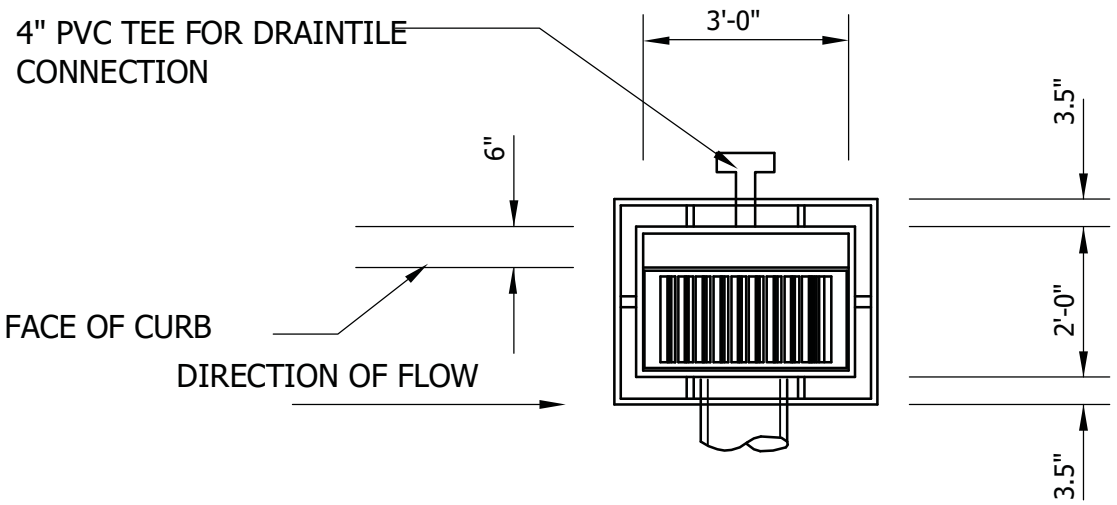

PLAN

NO BLOCK STRUCTURES ARE ALLOWED.

CATCHBASIN CASTING NEENAH R3067V (ON CONTINUOUS GRADES) OR R3067VB (AT LOW POINTS), WITH ENVIRONMENTAL NOTE, "DUMP NO WASTE, DRAINS TO FRESH WATER.

MINIMUM OF 2, AND MAXIMUM OF 5 CONCRETE ADJUSMENT RINGS ALLOWED WITH FULL BED OF MORTAR BETWEEN EACH. 1 RING W/MORTAR=0.2'; MAX. HORIZONTAL OFFSET=0.25'(3"). INSTALL EXTERNAL INFI-SHIELD GATOR WRAP, OR APPROVED EQUAL. INSTALL PER MANUFACTURER'S RECOMMENDATIONS.

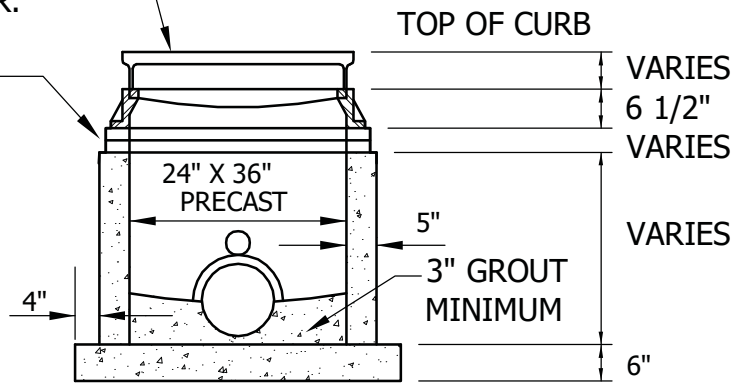

SECTION

MORTAR SHALL BE PURE PORTLAND SPECMIX OR APPROVED EQUAL.

DOGHOUSES SHALL BE GROUTED ON BOTH THE INSIDE AND OUTSIDE.

CITY OF MEDINA

CATCHBASIN
TYPE II

LAST REVISION:
JAN 2016

PLATE NO.
STO-05

NOTE:
3067V CASTING SHOWN

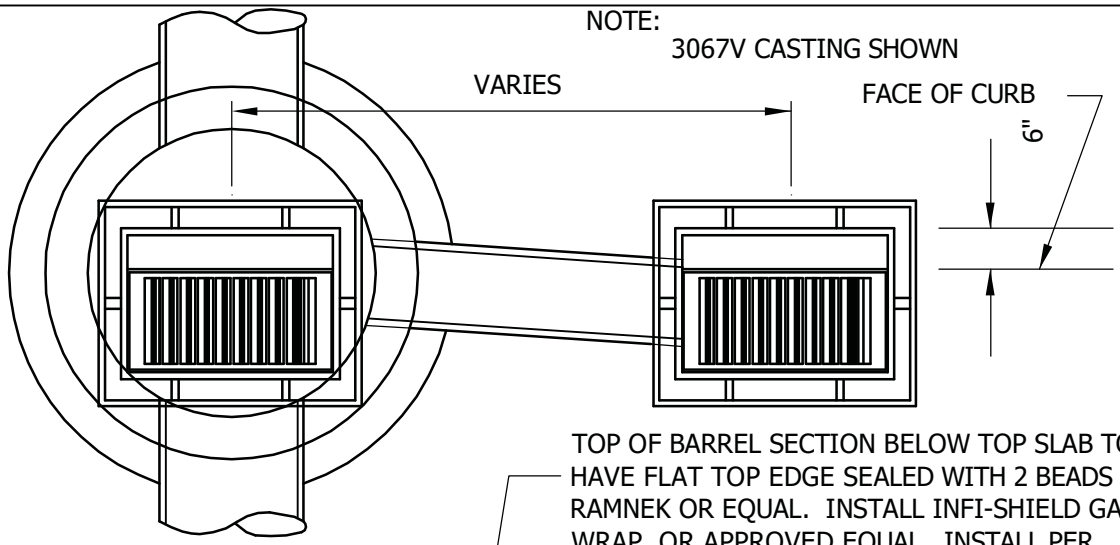

PLAN

TOP OF BARREL SECTION BELOW TOP SLAB TO HAVE FLAT TOP EDGE SEALED WITH 2 BEADS OF RAMNEK OR EQUAL. INSTALL INFI-SHIELD GATOR WRAP, OR APPROVED EQUAL. INSTALL PER MANUFACTURER'S RECOMMENDATION.

MORTAR SHALL BE PURE PORTLAND SPECMIX OR APPROVED EQUAL.

6" PRECAST REINFORCED CONCRETE SLAB.

CATCHBASIN CASTING NEENAH R3067V (ON CONTINUOUS GRADES) OR R3067VB (AT LOW POINTS), WITH ENVIRONMENTAL NOTE "DUMP NO WASTE, DRAINSTO FRESH WATER."

MINIMUM OF 2 AND MAXIMUM OF 5 CONCRETE ADJUSTMENT RINGS WITH FULL BED OF MORTAR BETWEEN EACH. 1 RING W/MORTAR=0.2'; MAX HORIZONTAL OFFSET=.25'. INSTALL EXTERNAL INFI-SHIELD SEALING SLEEVE OR APPROVED EQUAL. INSTALL PER MANUFACTURER'S RECCOMENDATION.

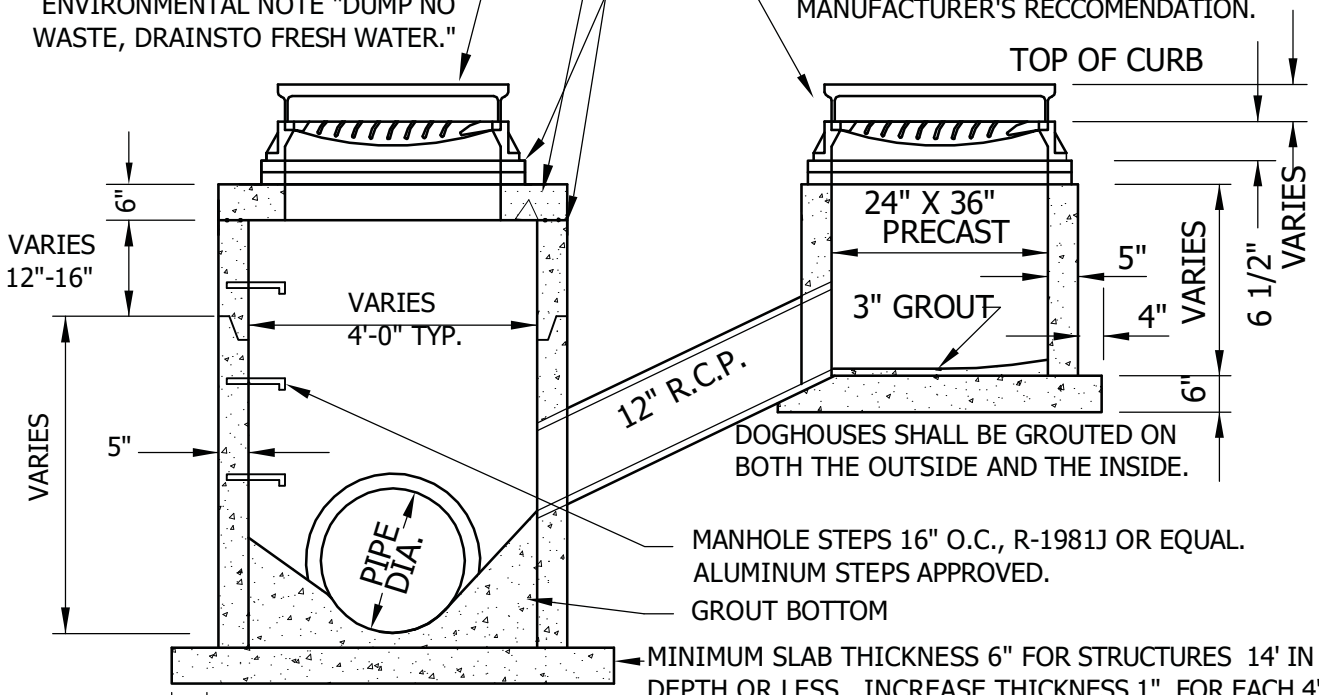

DOGHOUSES SHALL BE GROUTED ON BOTH THE OUTSIDE AND THE INSIDE.

MANHOLE STEPS 16" O.C., R-1981J OR EQUAL. ALUMINUM STEPS APPROVED.

GROUT BOTTOM

MINIMUM SLAB THICKNESS 6" FOR STRUCTURES 14' IN DEPTH OR LESS. INCREASE THICKNESS 1" FOR EACH 4' OF DEPTH GREATER THAN 14', AND REINFORCE WITH 6" X 6" 10/10 MESH.

6"

SECTION

CITY OF MEDINA

DOUBLE CATCHBASIN
TYPE II CBMH WITH TYPE I CB

LAST REVISION:
JAN 2016

PLATE NO.
STO-06

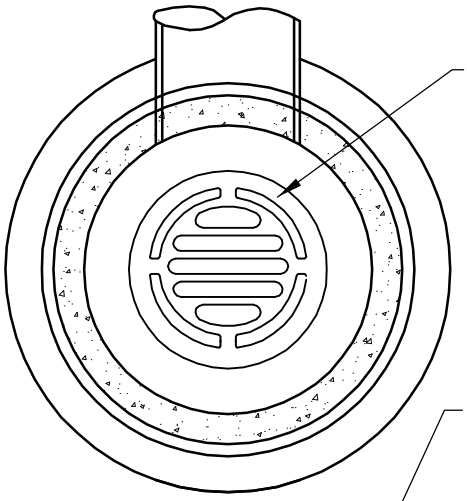

PLAN

NEENAH R-4342 CASTING OR EQUAL
NO BLOCK STRUCTURES ARE ALLOWED.

MORTAR SHALL BE PURE PORTLAND SPECMIX OR APPROVED EQUAL.

MINIMUM OF 2 AND MAXIMUM OF 5 CONCRETE ADJUSTMENT RINGS WITH FULL BED OF MORTAR BETWEEN EACH. 1 RING WITH MORTAR = 0.2'; MAX HORIZONTAL OFFSET = 0.25'. INSTALL EXTERNAL INFI-SHIELD SEALING SLEEVE OR APPROVED EQUAL. INSTALL PER MANUFACTURER'S RECOMMENDATIONS.

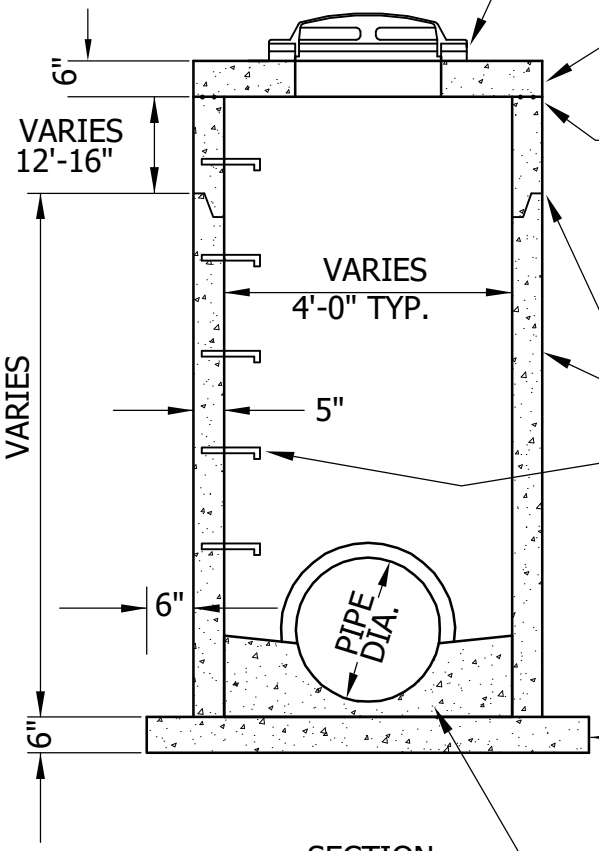

SECTION

6" PRECAST REINFORCED CONCRETE SLAB.

TOP OF BARREL SECTION UNDER TOP SLAB TO HAVE FLAT TOP EDGE SEALED WITH 2 BEADS OF RAMNEK OR EQUAL. INSTALL INFI-SHIELD. GATOR WRAP OR APPROVED EQUAL. INSTALL PER MANUFACTURER'S RECCOMMENTATION.

ALL JOINTS IN MANHOLE TO HAVE "O" RING RUBBER GASKETS.

PRECAST CONCRETE SECTION

MANHOLE STEPS, NEENAH R1981J OR EQUAL, 15" O.C., ALUMINUM STEPS APPROVED.

DOGHOUSES SHALL BE GROUTED ON BOTH THE OUTSIDE AND INSIDE.

MINIMUM SLAB THICKNESS, 6" FOR STRUCTURES 14" IN DEPTH OR LESS. INCREASE THICKNESS 1" FOR EACH 4' OF DEPTH GREATER THAN 14', AND REINFORCE WITH 6"X6" 10/10 MESH.

GROUT BOTTOM

CITY OF MEDINA

CATCHBASIN MANHOLE
TYPE II

LAST REVISION:
JAN 2016

PLATE NO.
STO-07

SEE CITY PLATE NO. STO-11 FOR RIPRAP PLACEMENT.

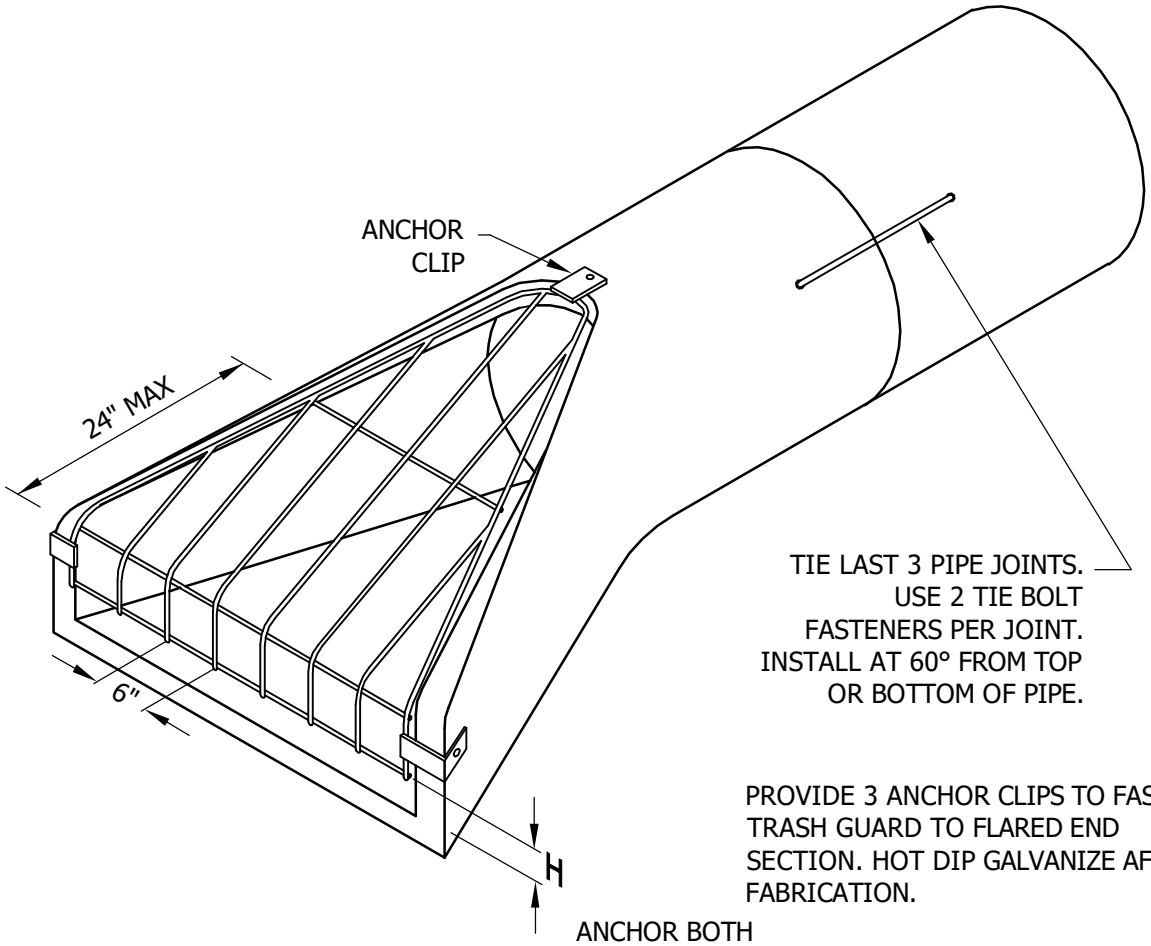

TIE LAST 3 PIPE JOINTS. USE 2 TIE BOLT FASTENERS PER JOINT. INSTALL AT 60° FROM TOP OR BOTTOM OF PIPE.

PROVIDE 3 ANCHOR CLIPS TO FASTEN TRASH GUARD TO FLARED END SECTION. HOT DIP GALVANIZE AFTER FABRICATION.

ANCHOR BOTH SIDES.

ISOMETRIC

TRASH GUARD SIZING

PIPE SIZE	BARS	`H'	BOLTS
12"-18"	3/4"ϕ	4"	5/8"
21"-42"	1"ϕ	6"	3/4"
48"-72"	1 1/4"ϕ	12"	1"

NOTE:
1. SHEET PILING REQUIRED FOR PIPE SIZES OF 36 INCHES OR GREATER, SEE PLATE NO. STO-20.

CITY OF MEDINA

FLARED END SECTION AND TRASH GUARD

LAST REVISION: JAN 2016

PLATE NO. STO-08

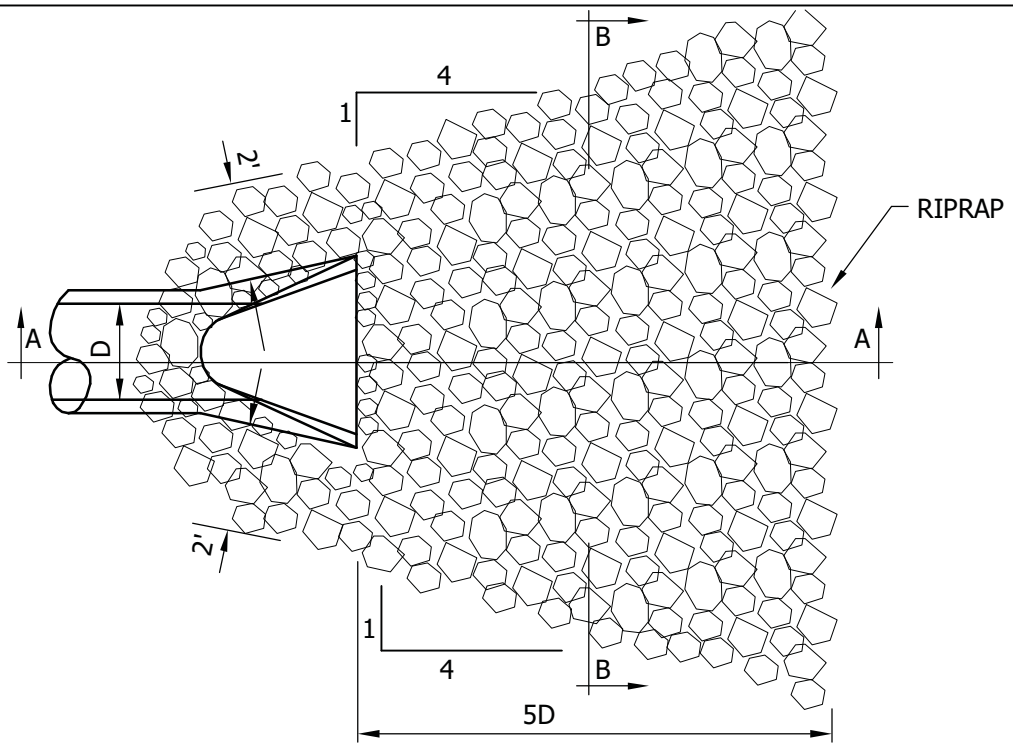

PLAN

RIPRAP REQUIREMENTS

12" TO 24"	8 TO 12 CY CL.3
27" TO 33"	14 TO 20 CY CL.3
36" TO 48"	23 TO 38 CY CL.3
54" AND UP	62 CY AND UP CL.4

(ONE CUBIC YARD IS APPROXIMATELY 2,800 LBS.)

NOTE:

FILTER BLANKET REQUIRED UNDER RIPRAP OR 2 LAYERS OF 500X MIRAFI FABRIC OR EQUAL.

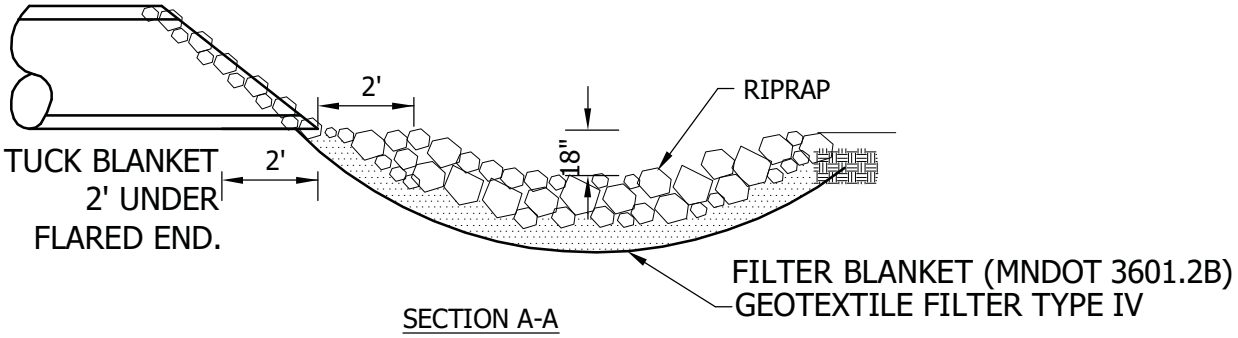

SECTION A-A

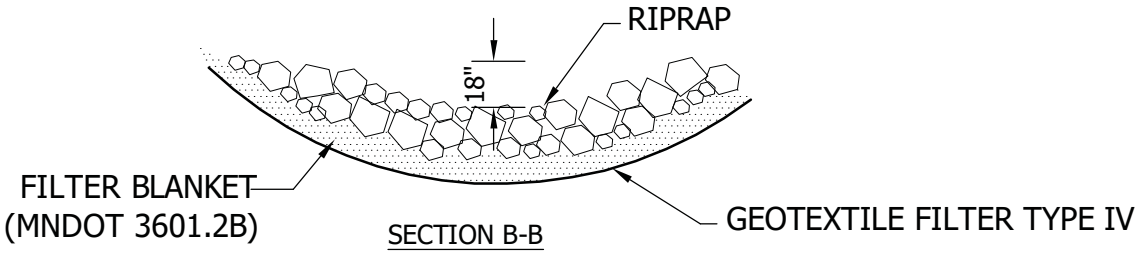

SECTION B-B

CITY OF MEDINA

RIPRAP AT OUTLETS

LAST REVISION:
JAN 2016

PLATE NO.
STO-09

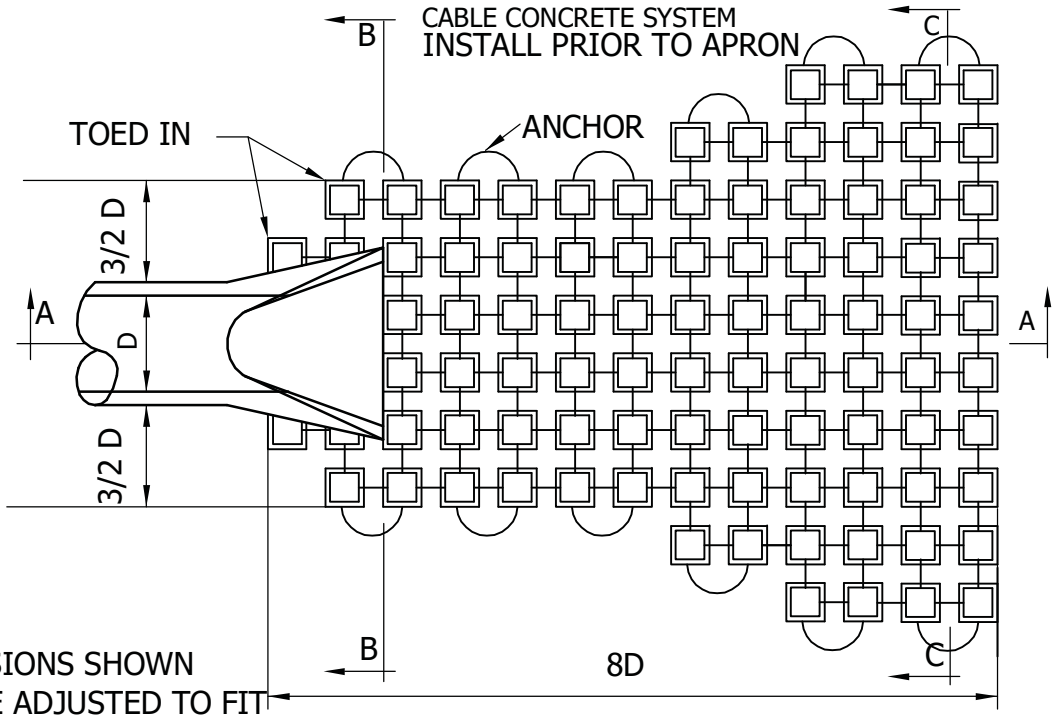

NOTE:

1. DIMENSIONS SHOWN WILL BE ADJUSTED TO FIT STANDARD PANELS
2. MIN. BLOCK WEIGHT=77PSF
3. MIN. CABLE DIA.=5/32" STAINLESS STEEL

PLAN

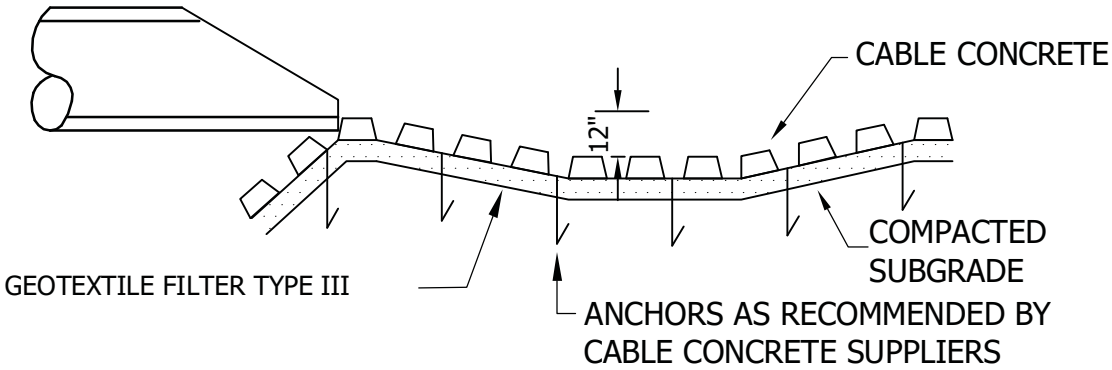

SECTION A-A

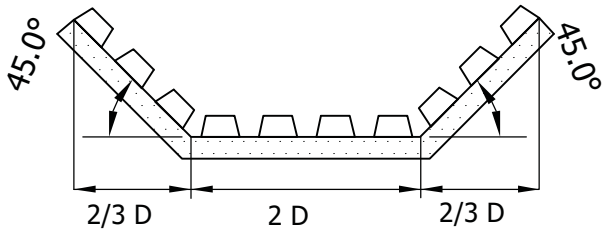

SECTION B-B

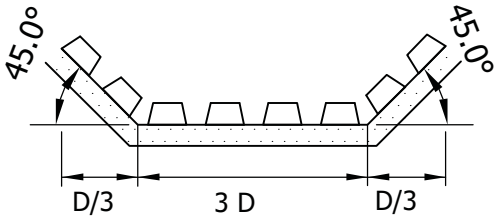

SECTION C-C

CITY OF MEDINA

CABLE CONCRETE AT OUTLETS

LAST REVISION: JAN 2016

PLATE NO. STO-10

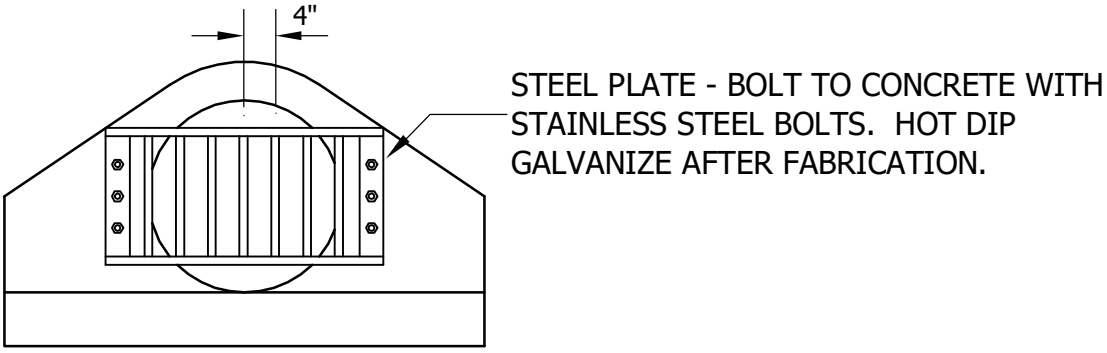

FRONT VIEW

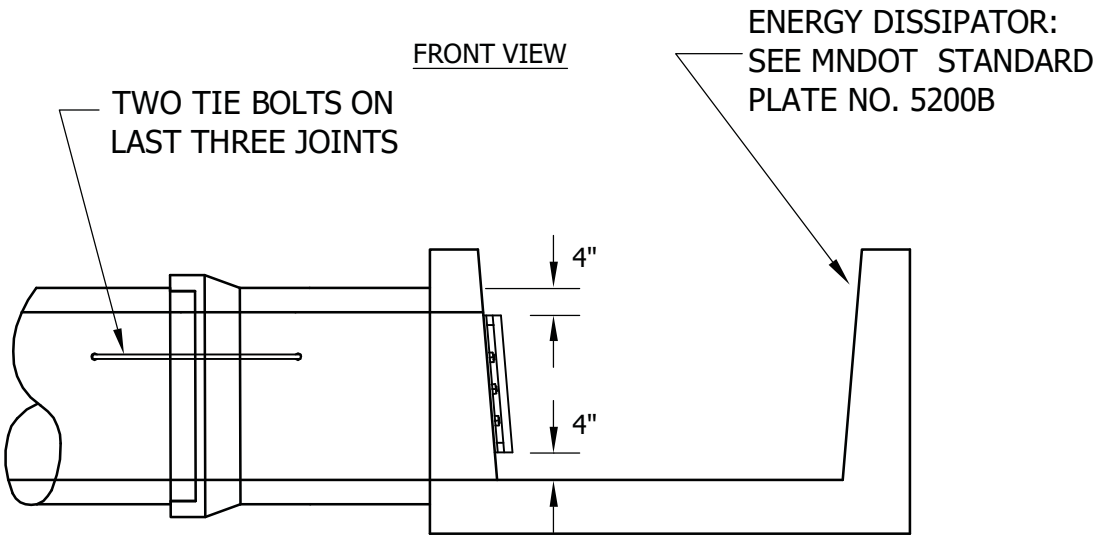

SIDE VIEW

SIZE OF PIPE	SIZE OF PLATE	BARS	BOLTS
12" TO 18"	1/4"X2"	3/4"ϕ	2-5/8"ϕ
21" TO 48"	1/4"X3"	1"ϕ	3-3/4"ϕ

NOTE:

TIE LAST 3 JOINTS. USE 2 TIE BOLT FASTENERS PER JOINT INTALLED AT 60ϕ FROM TOP OR BOTTOM OF PIPE.

CITY OF MEDINA

ENERGY DISSIPATOR AND TRASH GUARD

LAST REVISION: JAN 2016

PLATE NO. ST0-11

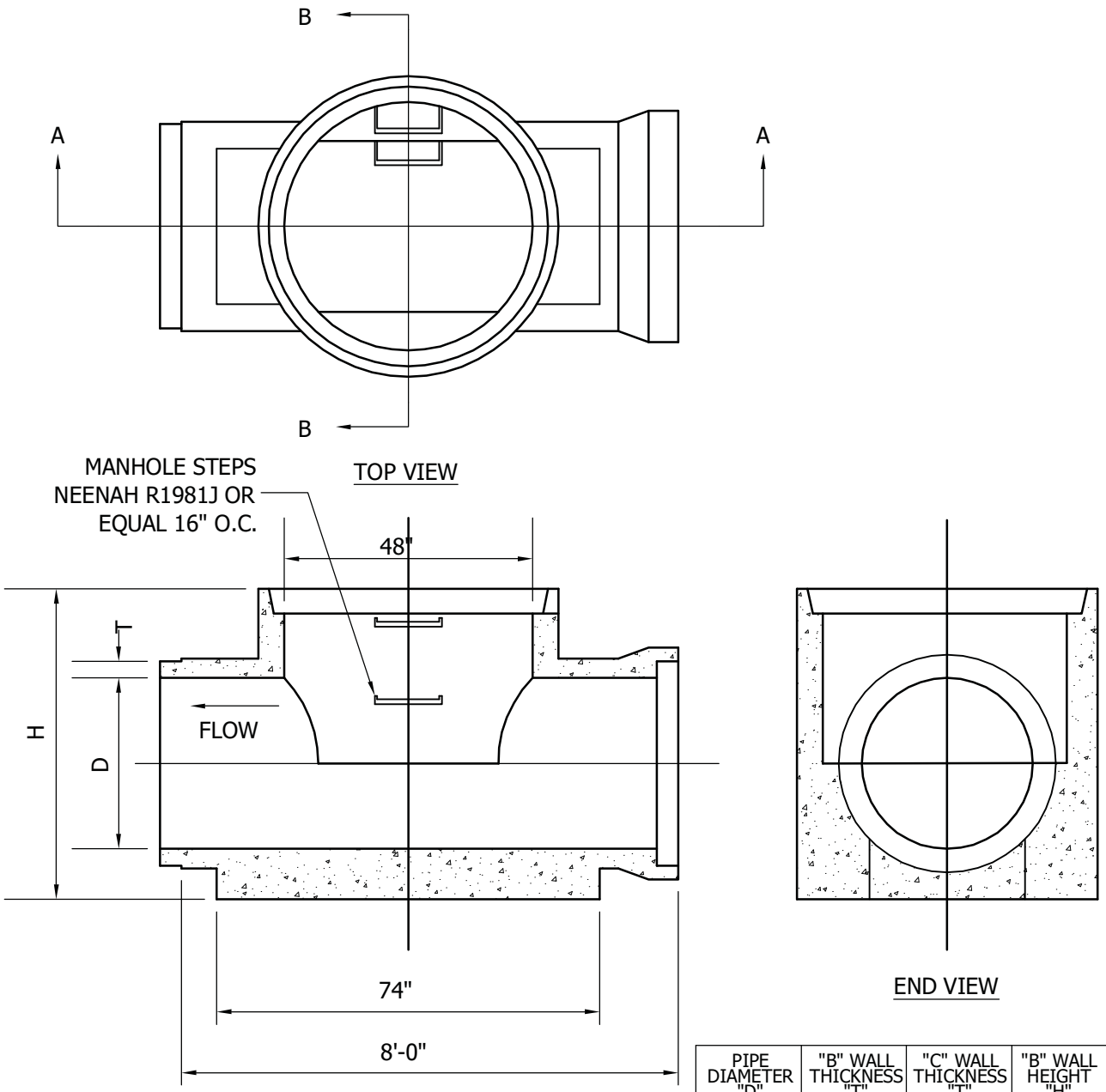

PIPE DIAMETER "D"	"B" WALL THICKNESS "T"	"C" WALL THICKNESS "T"	"B" WALL HEIGHT "H"
12"	2"	2 3/4"	36"
15"	2 3/4"	3"	36"
18"	2 1/2"	3 1/4"	48"
21"	2 3/4"	3 1/2"	48"
24'	3"	3 3/4"	48"
27"	3 1/4"	4"	60"
30"	3 1/2"	4 1/4"	60"
33"	3 3/4"	4 1/2"	60"
36"	4"	4 3/4"	60"

NOTE:

1. ALL PIPES SHALL HAVE R-4 RUBBER GASKET JOINT.
2. HORIZONTAL PIPE MAY BE "B" WALL OR "C" WALL.

CITY OF MEDINA

MINI-TEE MANHOLE

LAST REVISION:
JAN 2016

PLATE NO.
STO-12

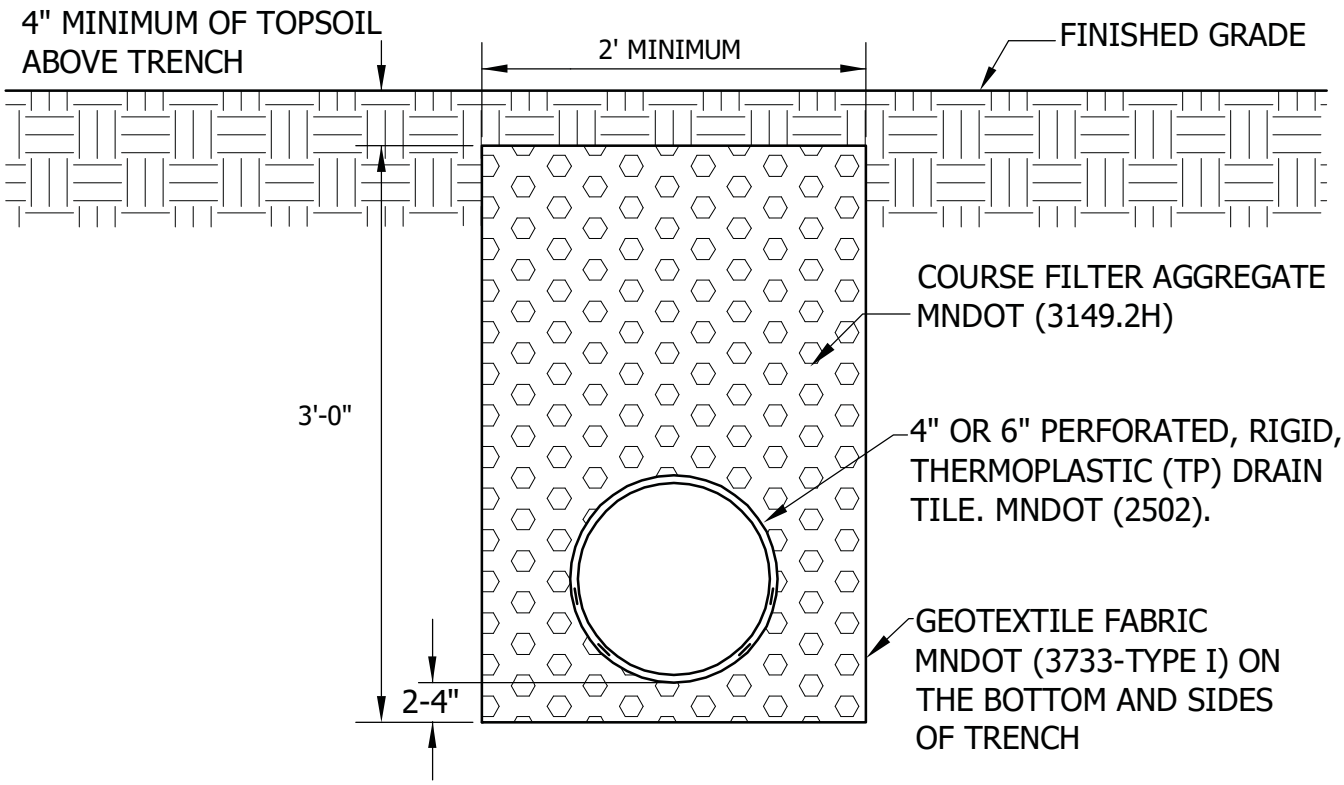

TRENCH DETAIL

NOTE:
DO NOT WRAP PIPES IN GEO-FABRIC, OR PLACE GEO-FABRIC OVER TOP OF DRAINS.

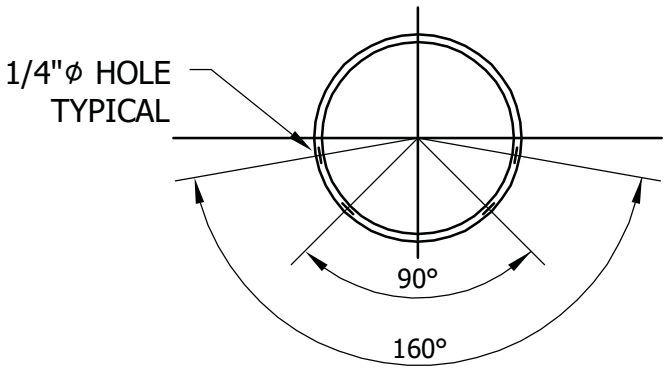

PIPE DETAIL

CITY OF MEDINA

PVC PERFORATED PIPE
SWALE INSTALLATION

LAST REVISION:
JAN 2016

PLATE NO.
STO-13

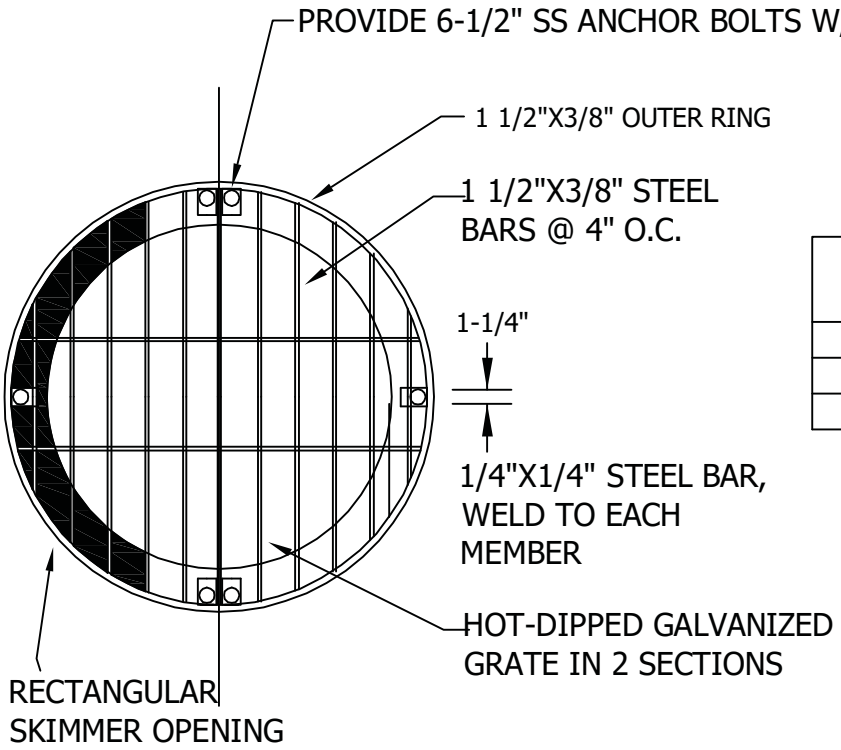

MH DIAMETER	SKIMMER OPENING
4'	3'X1.5'
5'	4.5'X1.5'
6'	6'X1.5'

GRATE DETAIL

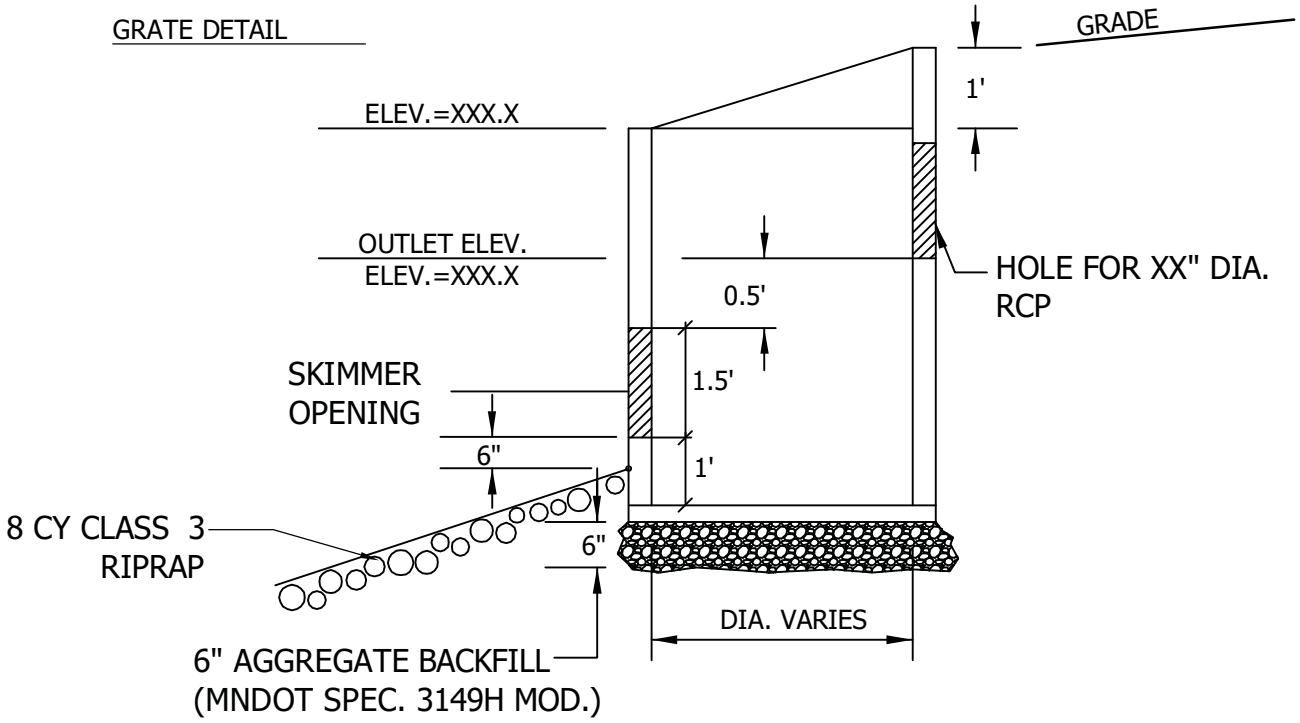

CITY OF MEDINA

STORM SEWER SKIMMER STRUCTURE

LAST REVISION: JAN 2016

PLATE NO. STO-15

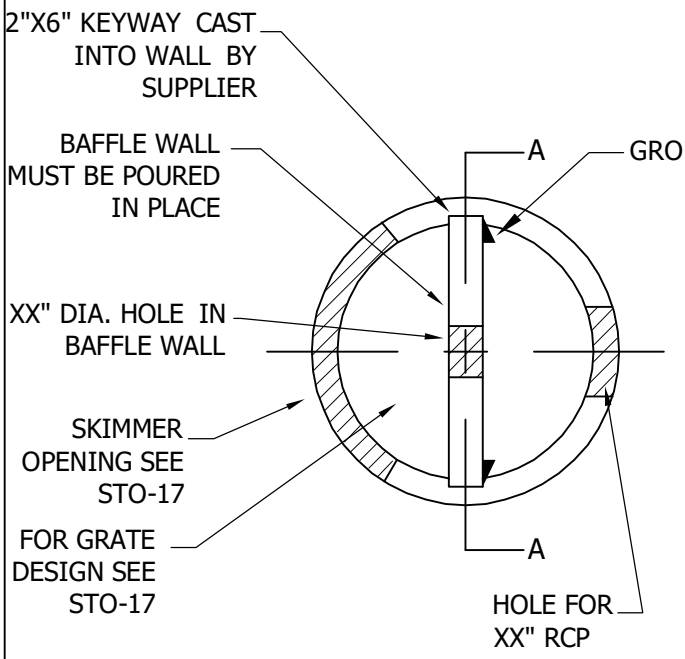

SKIMMER GRATE

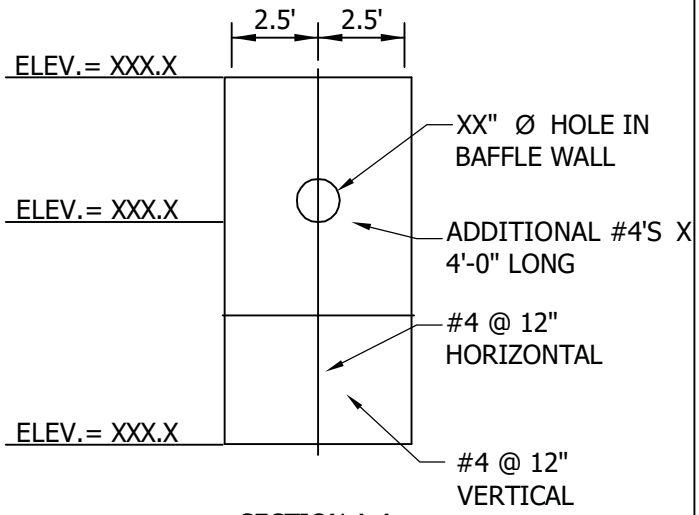

SECTION A-A
CONCRETE BAFFLE WALL

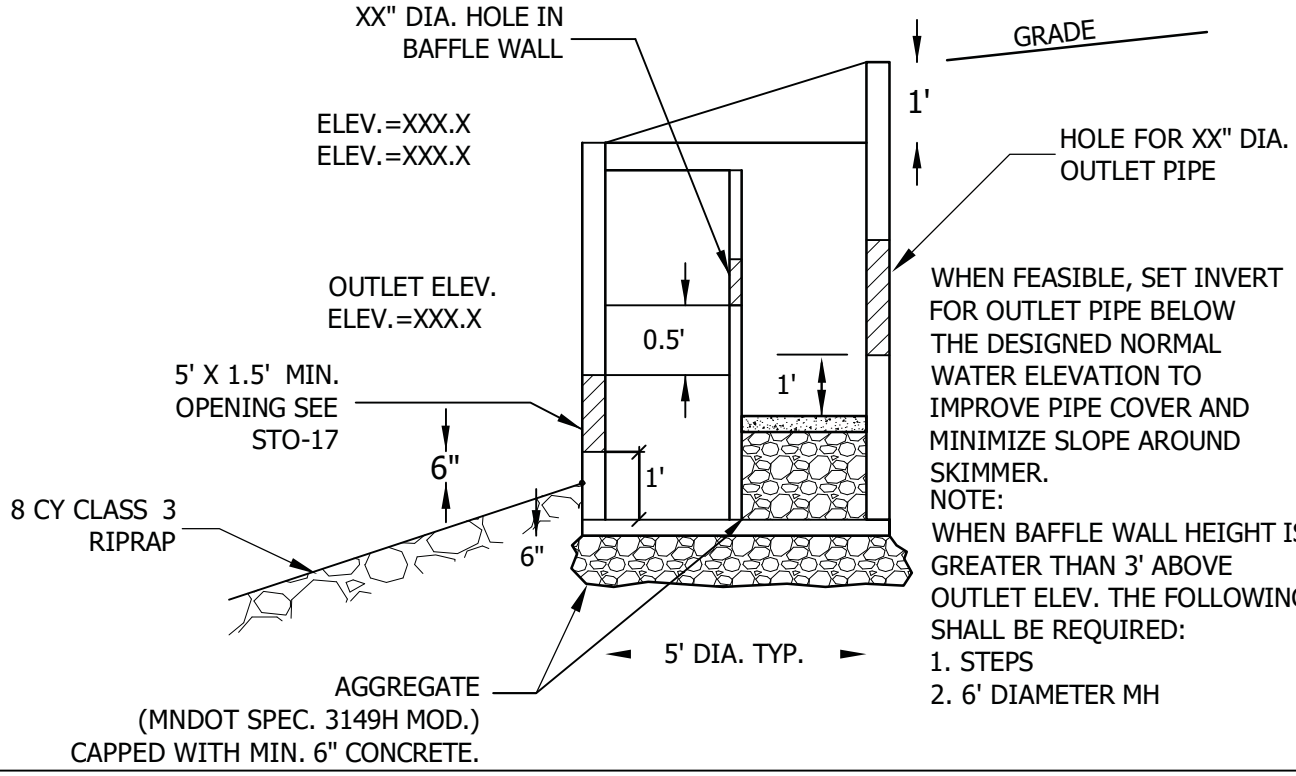

WHEN FEASIBLE, SET INVERT FOR OUTLET PIPE BELOW THE DESIGNED NORMAL WATER ELEVATION TO IMPROVE PIPE COVER AND MINIMIZE SLOPE AROUND SKIMMER.

NOTE:
WHEN BAFFLE WALL HEIGHT IS GREATER THAN 3' ABOVE OUTLET ELEV. THE FOLLOWING SHALL BE REQUIRED:
1. STEPS
2. 6' DIAMETER MH

CITY OF MEDINA

SKIMMER STRUCTURE WITH CONCRETE BAFFLE WALL

LAST REVISION:
JAN 2016

PLATE NO.
ST0-16

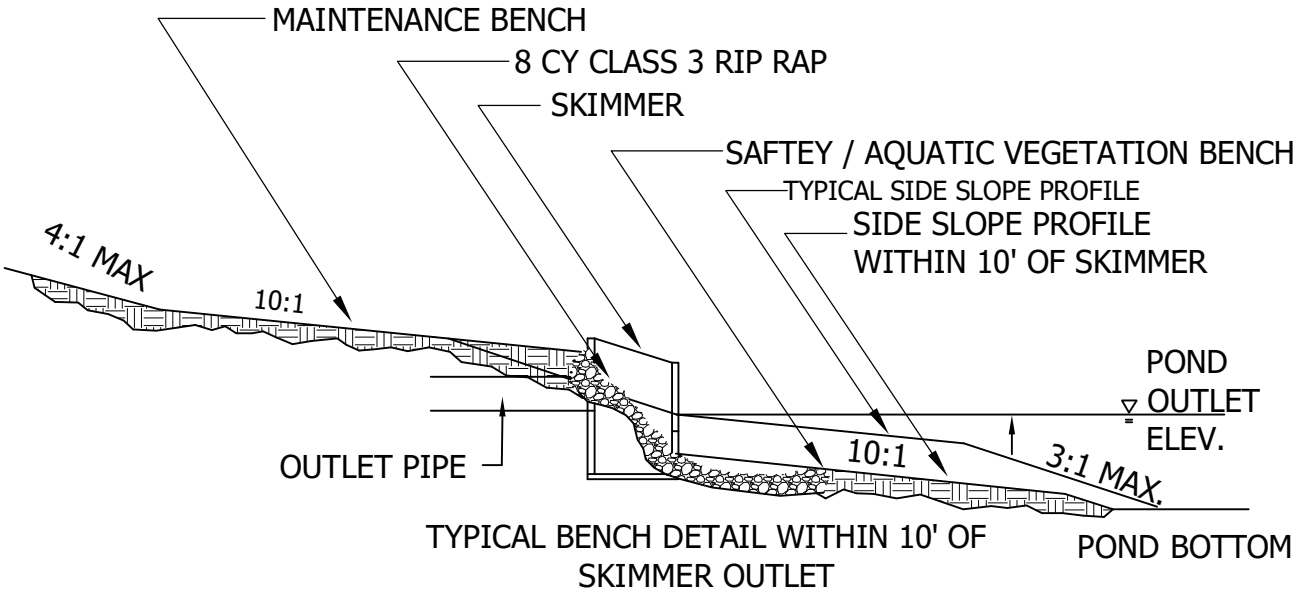

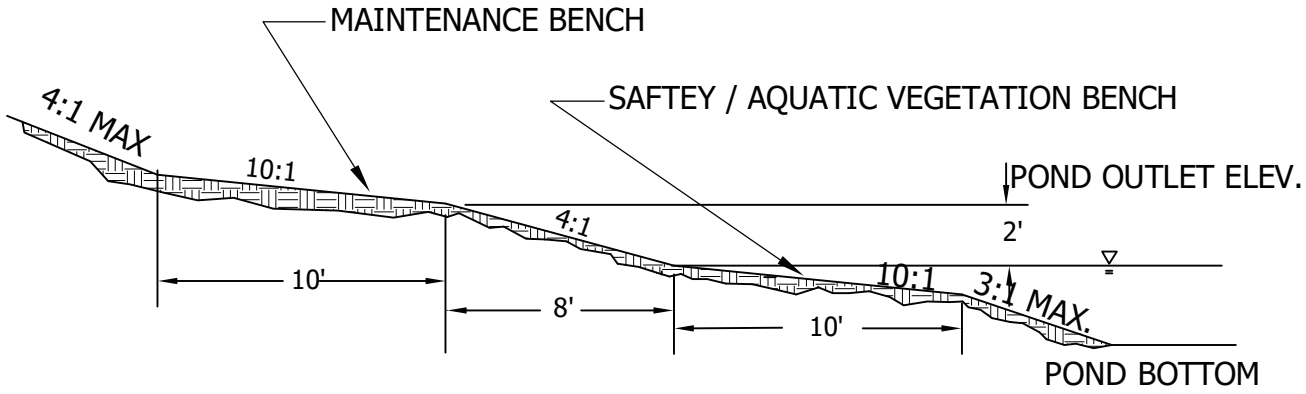

TYPICAL BENCH DETAIL

NOTE:
SEE CITY PLATE #STO-15 OR #STO-16 FOR SPECIFIC SKIMMER STRUCTURE DETAILS.

CITY OF MEDINA

TYPICAL BENCH DETAIL

LAST REVISION:
JAN 2016

PLATE NO.
STO-17

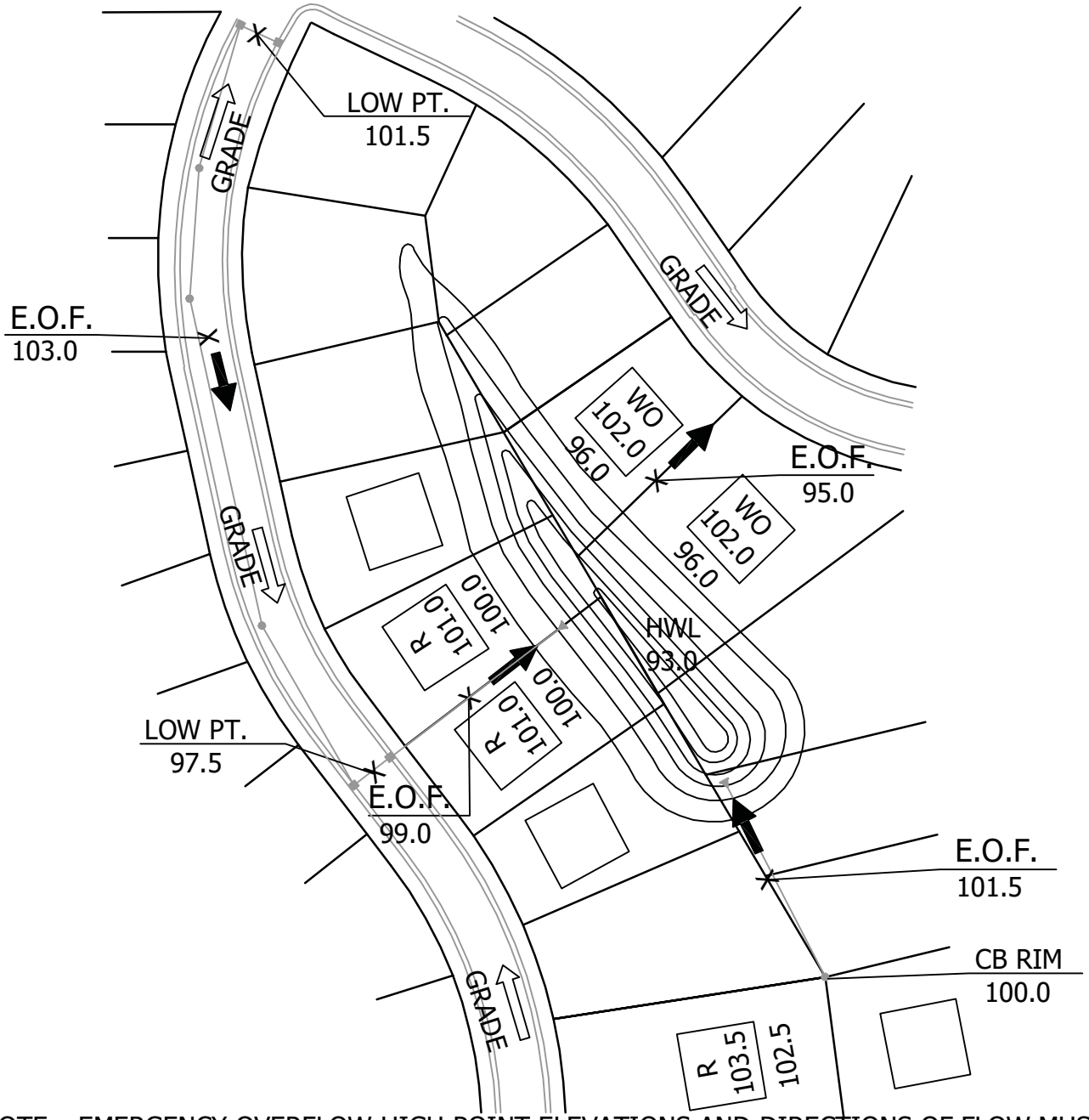

NOTE: EMERGENCY OVERFLOW HIGH POINT ELEVATIONS AND DIRECTIONS OF FLOW MUST BE SHOWN FOR ALL STREET AND REAR YARD CATCH BASINS, PONDS, LAKES, WETLANDS, DITCHES AND STREAMS. BUILDING LOW FLOOR ELEVATIONS SHALL BE REQUIRED TO BE AT LEAST 2 FEET ABOVE THE 100-YR HWL OF HYDRAULICALLY CONNECTED WATER AND WETLANDS. A MAXIMUM 18" SEPARATION MUST BE MAINTAINED BETWEEN THE STREET CENTERLINE LOWPOINT ELEVATION AND THE E.O.F. HIGH POINT. ALL SIDE AND REAR LOT SWALES MUST HAVE A MINIMUM SLOPE OF 2%.

CITY OF MEDINA

EMERGENCY OVERFLOW DETAIL

LAST REVISION: JAN 2016

PLATE NO. STO-18

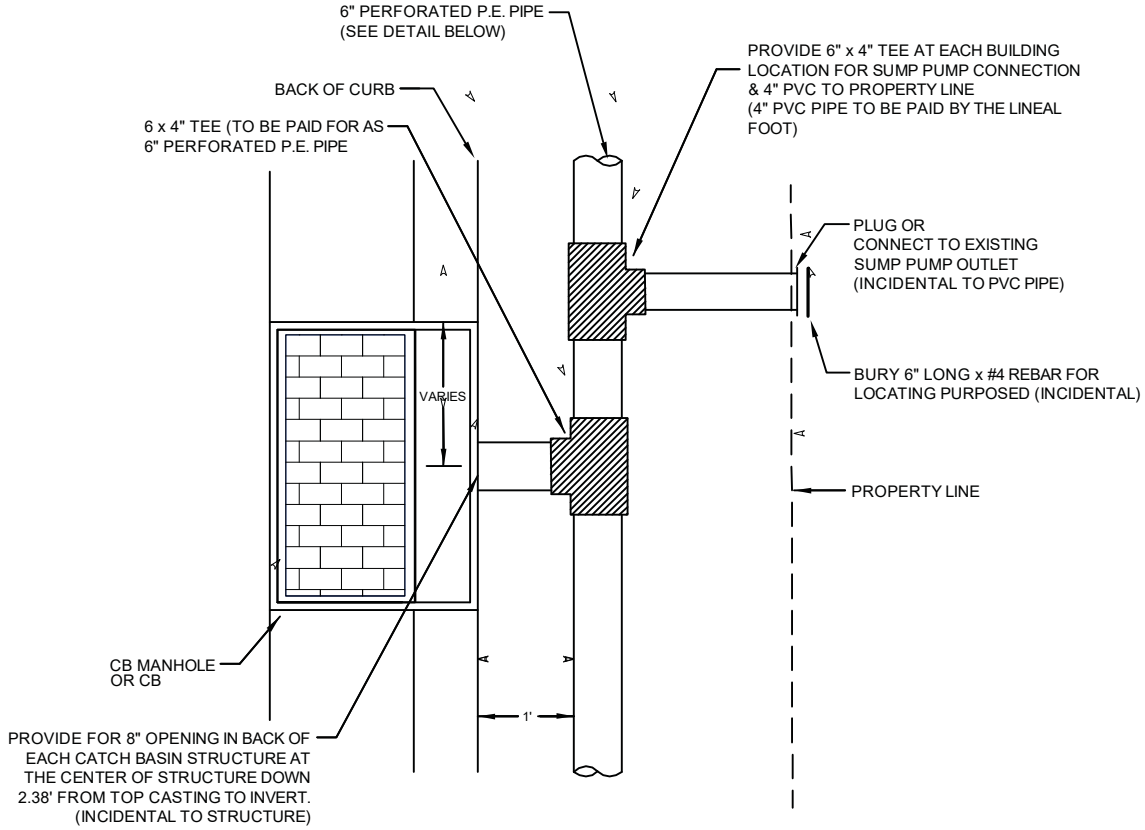

P.E. PIPE DRAIN CONNECTION TO MANHOLE OR CB

NO SCALE

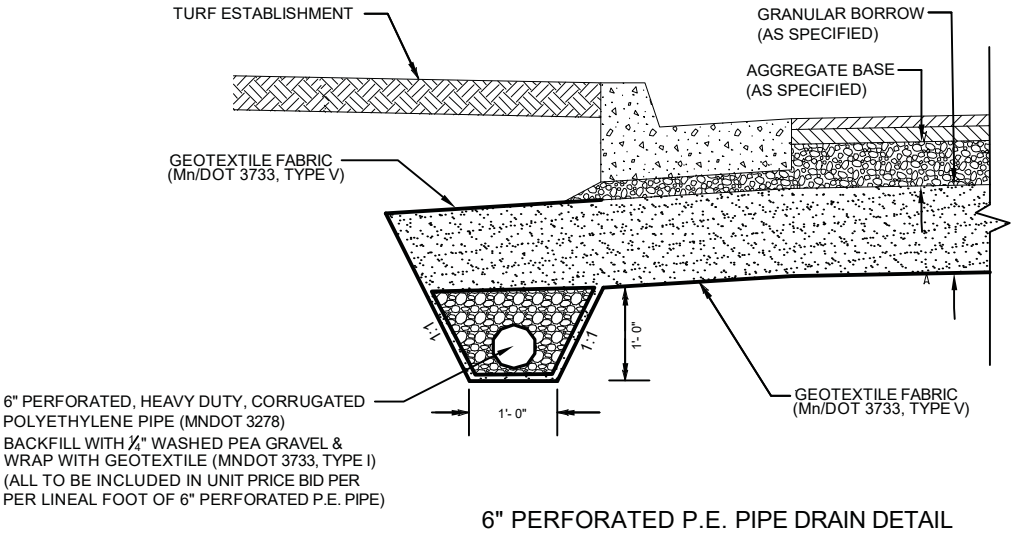

6" PERFORATED P.E. PIPE DRAIN DETAIL

NO SCALE

NOTE:

1. IF SUMP PUMP DRAINS ARE NOT REQUIRED, 4-INCH PERFORATED DRAINTILE IS ACCEPTABLE.

CITY OF MEDINA

PERFORATED DRAIN TILE WITH SUMP PUMP CONNECTIONS

LAST REVISION:
JAN 2016

PLATE NO.
STO-19

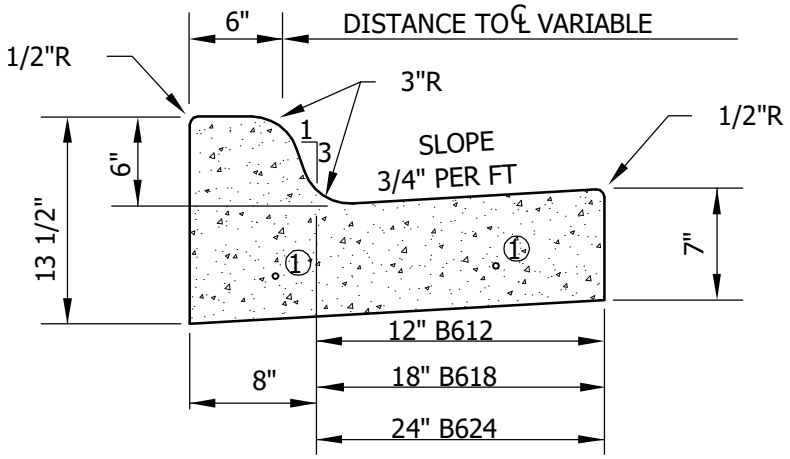

MNDOT B612
MNDOT B618
MNDOT B624

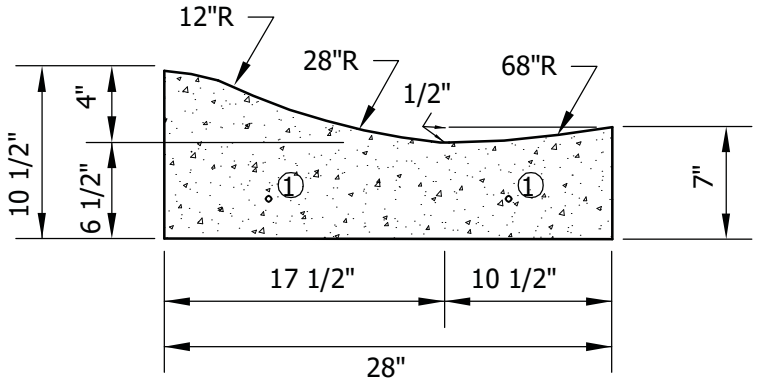

MOUNTABLE

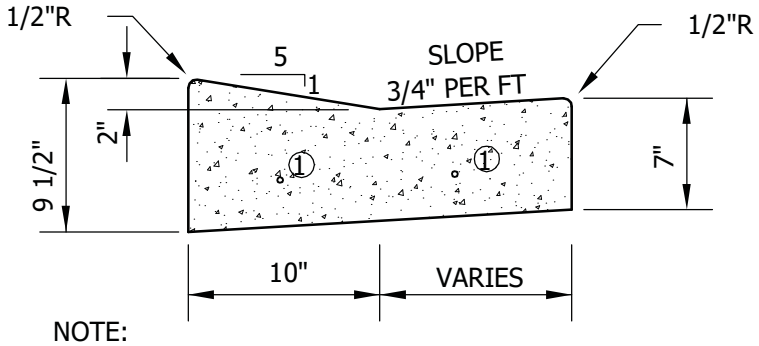

STANDARD SECTION
THROUGH DRIVEWAY

NOTE:

① PLACE #4 REBAR AS SHOWN, WHERE CURB CROSSES UTILITY TRENCHES WITH 1 1/2" OF COVER.

CITY OF MEDINA

CURB AND GUTTER

LAST REVISION:
JAN 2016

PLATE NO.
STR-01

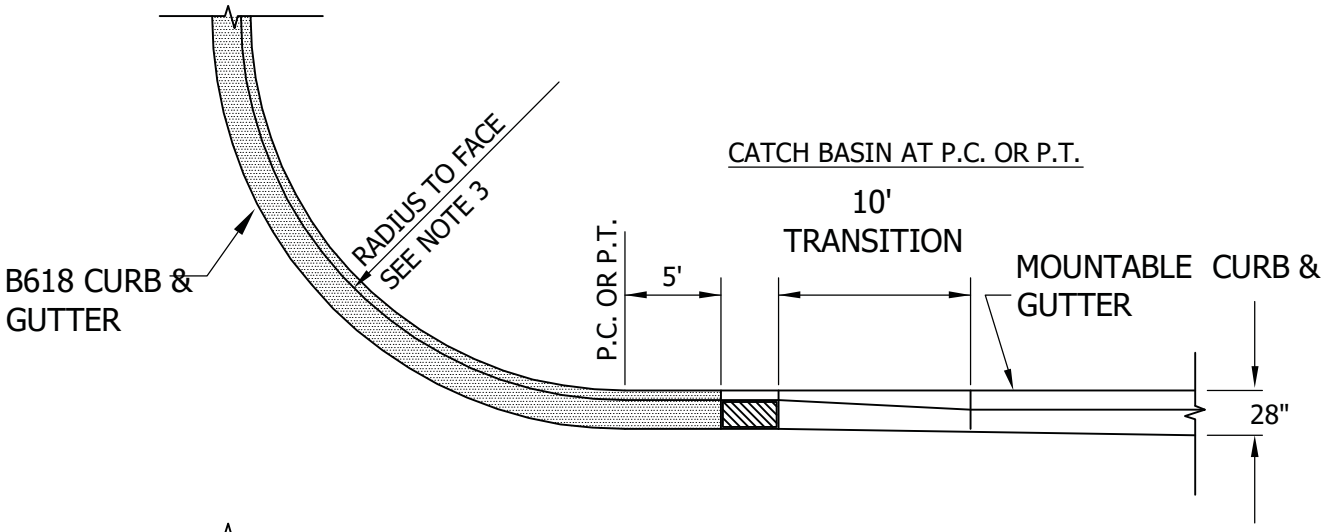

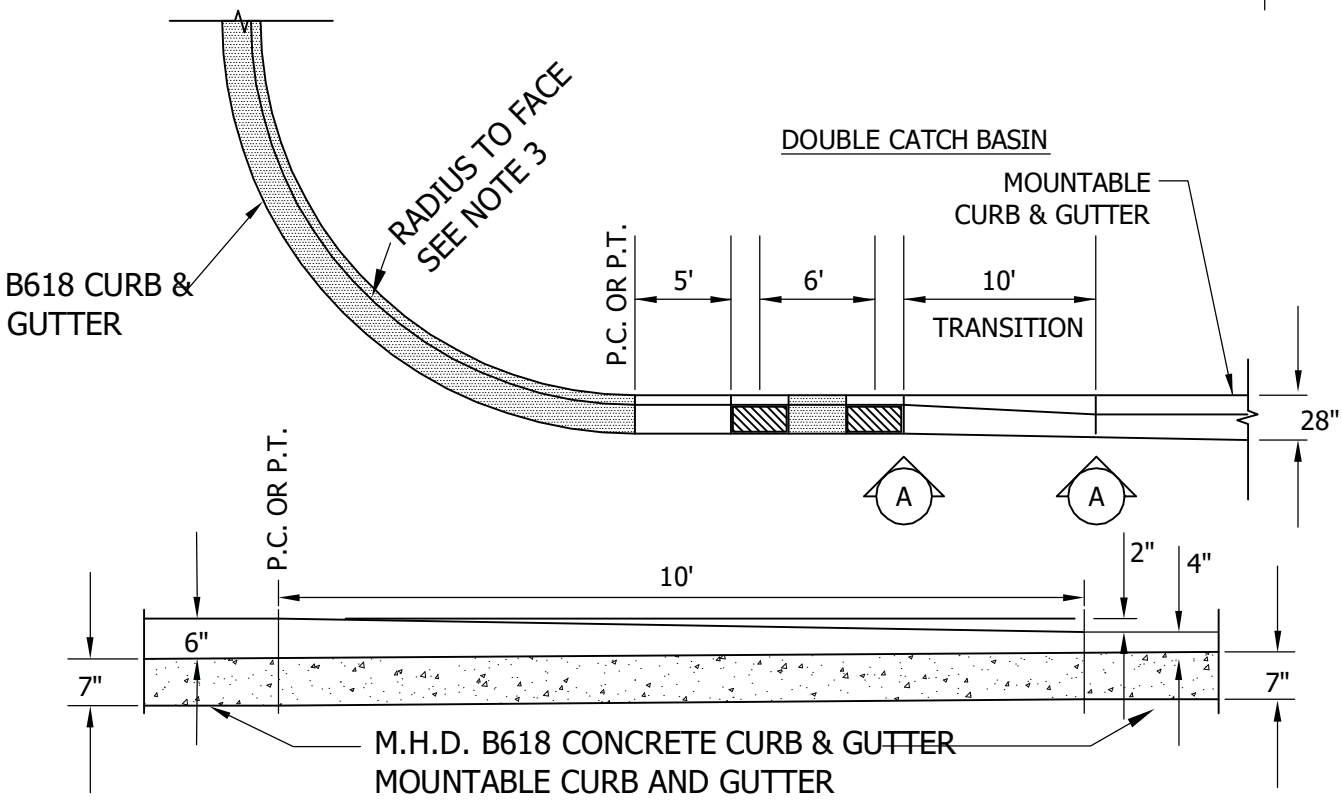

SECTION A-A

NOTE:

1. ALL RADII ARE MEASURED TO FACE OF CURB.
2. NO CATCH BASINS WILL BE CONSTRUCTED IN THE INTERSECTION RADII.
3. 30' RADII WILL BE REQUIRED AT INTERSECTIONS OF ALL COLLECTOR TO RESIDENTIAL STREETS. 20' RADII WILL BE REQUIRED AT INTERSECTIONS OF ALL RESIDENTIAL TO RESIDENTIAL STREETS.

CITY OF MEDINA

CONCRETE CURB AND GUTTER TRANSITION

LAST REVISION: JAN 2016

PLATE NO. STR-02

NOTE:
MOUNTABLE CURB & GUTTER TO BE FORMED INTO A B618 TYPE AT CATCHBASIN.

CATCHBASIN FRAME & COVER NEENAH R-3067V BI-DIRECTIONAL CASTING AT LOW POINTS AND UNI-DIRECTIONAL CASTING AT OTHER LOCATIONS WITH ENVIRONMENTAL NOTE "DUMP NO WASTE, DRAINS TO FRESH WATER."

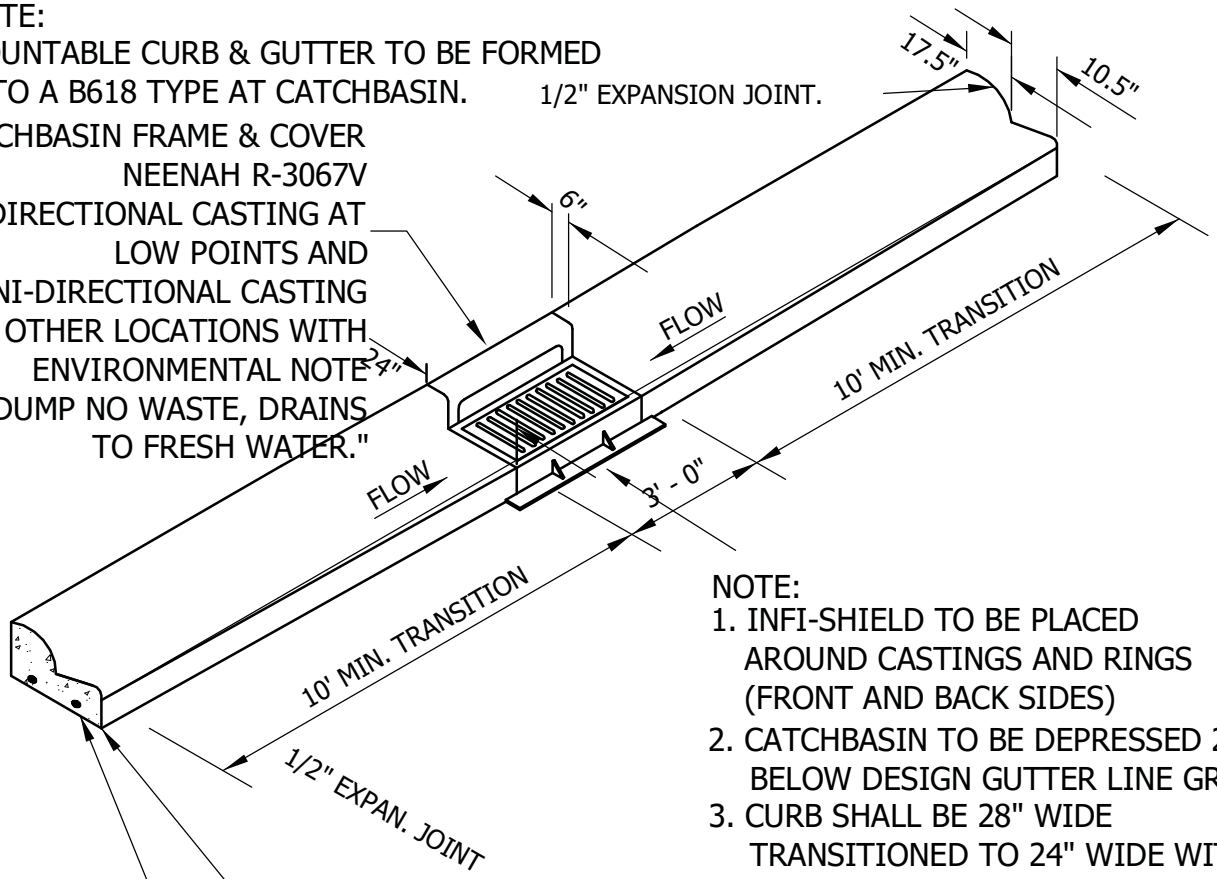

NOTE:
1. INFI-SHIELD TO BE PLACED AROUND CASTINGS AND RINGS (FRONT AND BACK SIDES)
2. CATCHBASIN TO BE DEPRESSED 2" BELOW DESIGN GUTTER LINE GRADE.
3. CURB SHALL BE 28" WIDE TRANSITIONED TO 24" WIDE WITHIN 10' EITHER SIDE OF CATCH BASIN.

NO SCALE

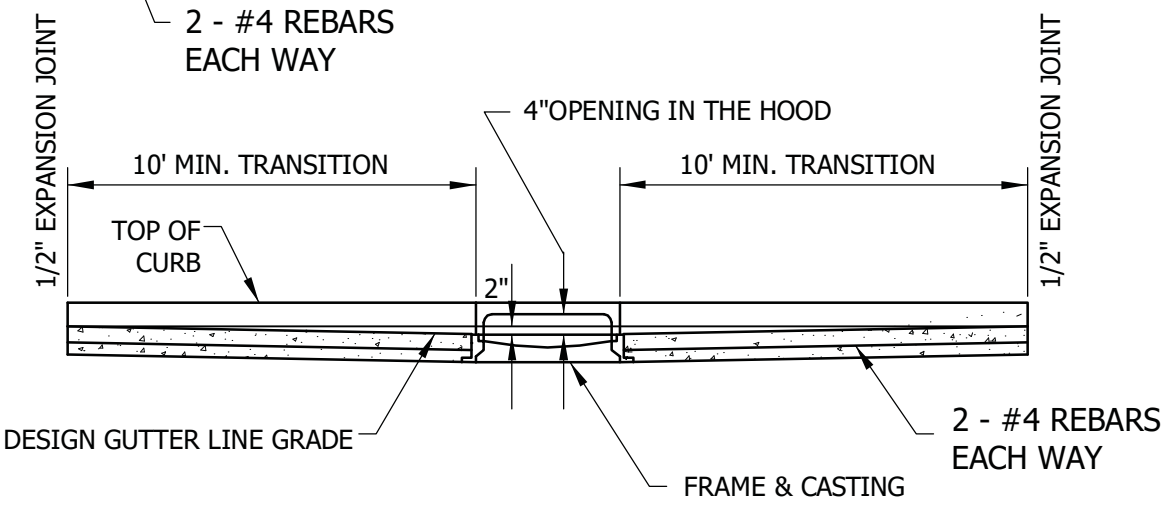

CITY OF MEDINA

MOUNTABLE CURB AND GUTTER CONSTRUCTION AT CATCHBASIN

LAST REVISION: JAN 2016

PLATE NO. STR-03

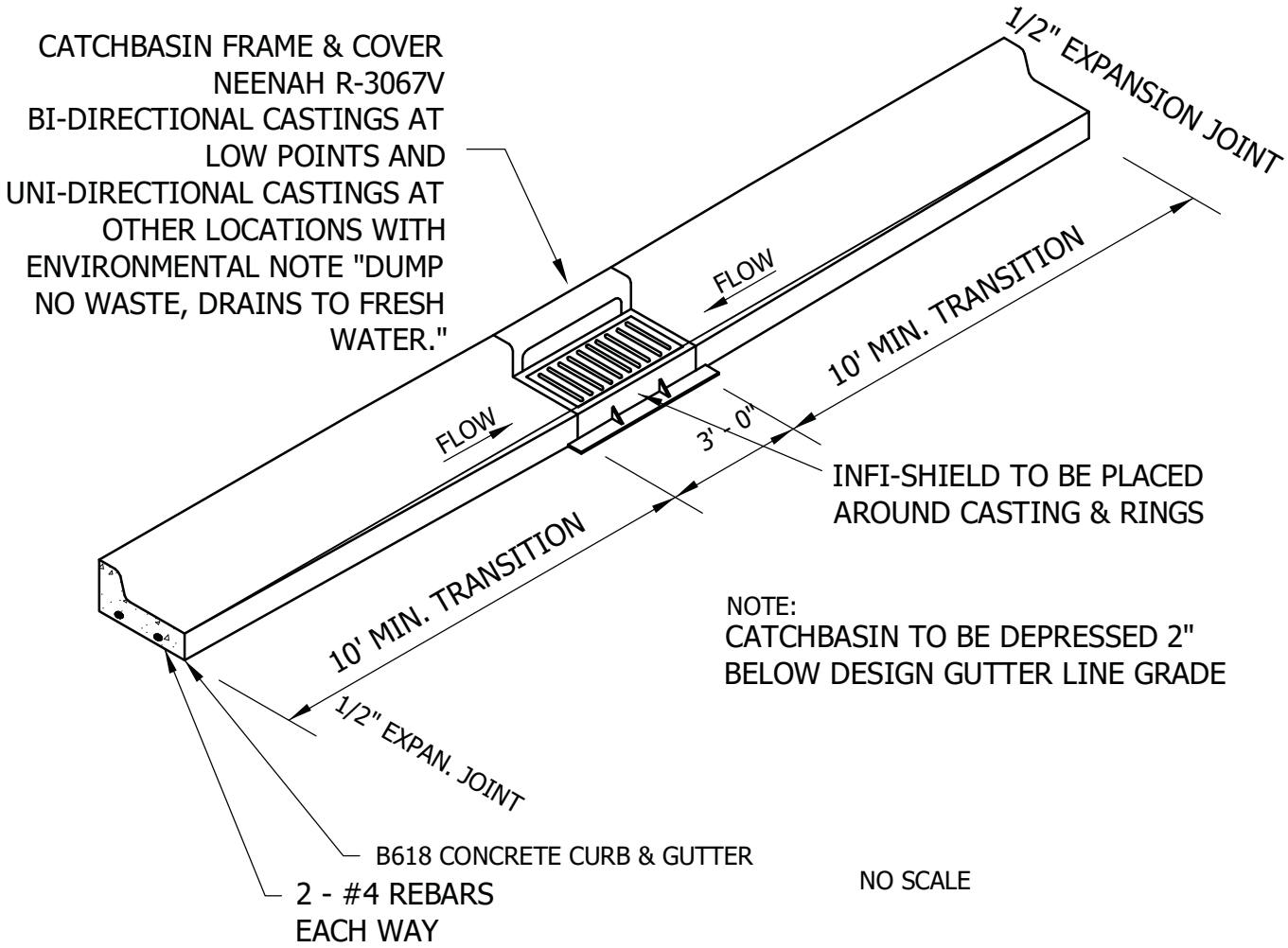

NOTE:
CATCHBASIN TO BE DEPRESSED 2"
BELOW DESIGN GUTTER LINE GRADE

NO SCALE

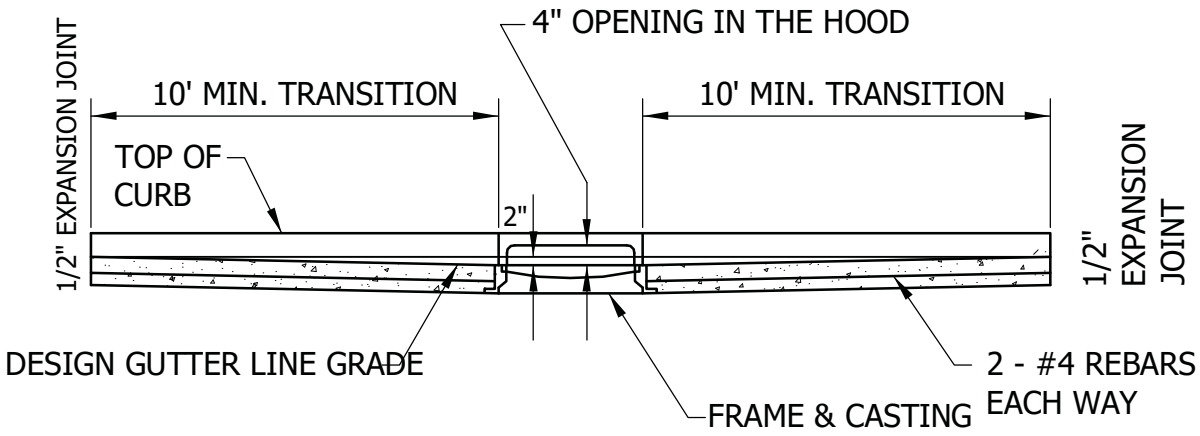

CITY OF MEDINA

B618 CURB AND GUTTER CONSTRUCTION
AT CATCHBASIN

LAST REVISION:
JAN 2016

PLATE NO.
STR-04

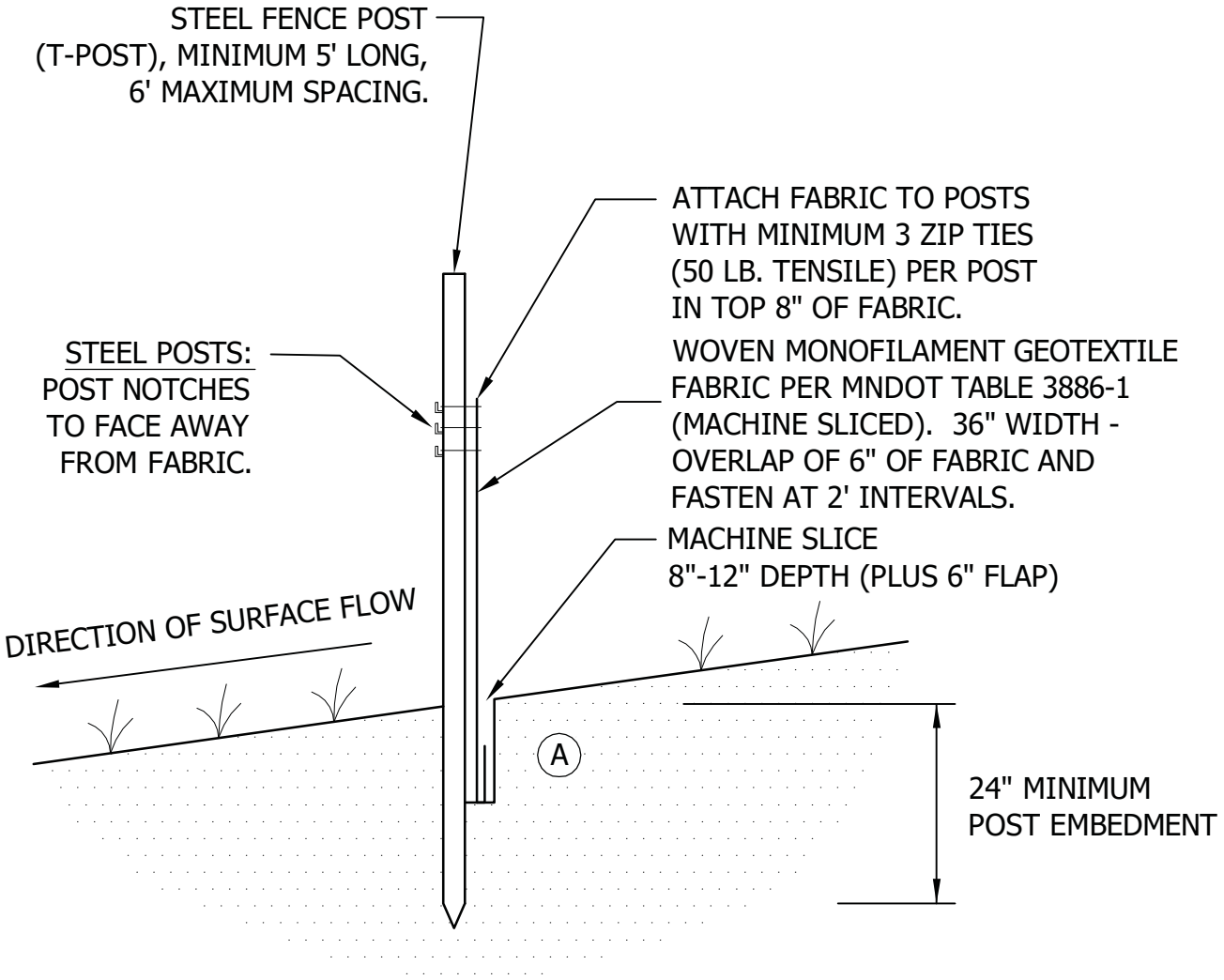

NOTE:
THE MACHINE SLICED METHOD (THIS DETAIL) IS THE STANDARD SILT FENCE INSTALLATION METHOD. HEAVY-DUTY OR STANDARD SILT FENCE INSTALLATION METHODS SHOULD ONLY BE USED WHEN APPROVED OR DIRECTED BY THE CITY.

(A) AFTER "SLICING" IN THE FABRIC AND BEFORE THE INSTALLATION OF STEEL POSTS, DRIVE INSTALLATION EQUIPMENT OVER THE "SLICE" WHILE FABRIC IS LAYING ON THE GROUND. THEN INSTALL STEEL POSTS AND PULL UP FABRIC TO ATTACH TO A UNIFORM HEIGHT.

CITY OF MEDINA

SILT FENCE
MACHINE SLICED

LAST REVISION:
JAN 2016

PLATE NO.
ERO-01

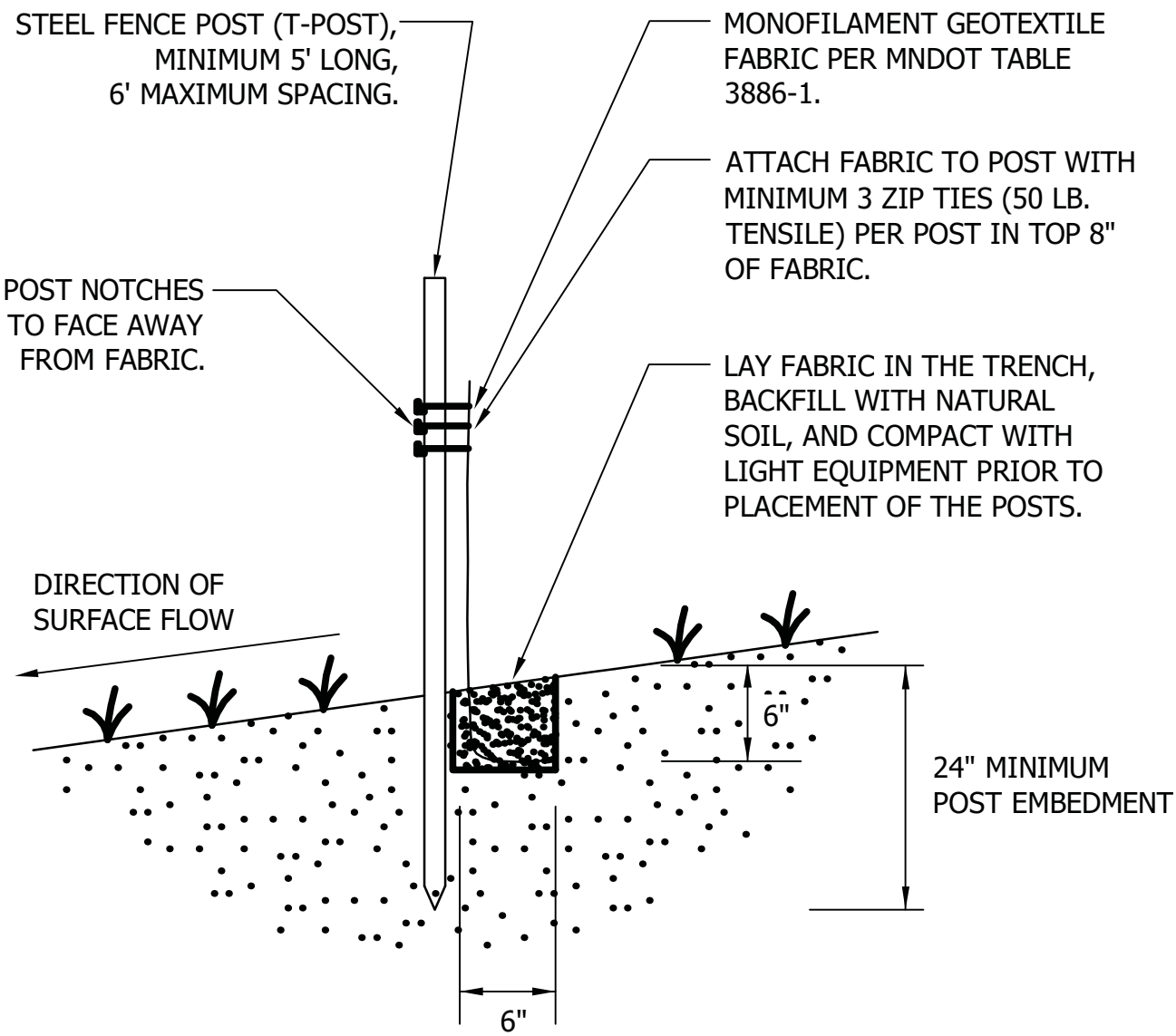

NOTES:

1. SPLICING WILL BE MADE AT OPPOSING SILT FENCE POSTS BY PLACING POSTS AND SILT FENCE NEXT TO EACH OTHER AND ROTATING 360°.
2. HEAVY DUTY SILT FENCE IS MACHINE SLICED TYPE SILT FENCE THAT IS HAND INSTALLED IN AREAS INACCESSIBLE TO EQUIPMENT DUE TO SPACE LIMITATIONS, WET SOILS, STEEP SLOPES, ETC.

CITY OF MEDINA

SILT FENCE
HEAVY DUTY

LAST REVISION:
JAN 2016

PLATE NO.
ERO-02

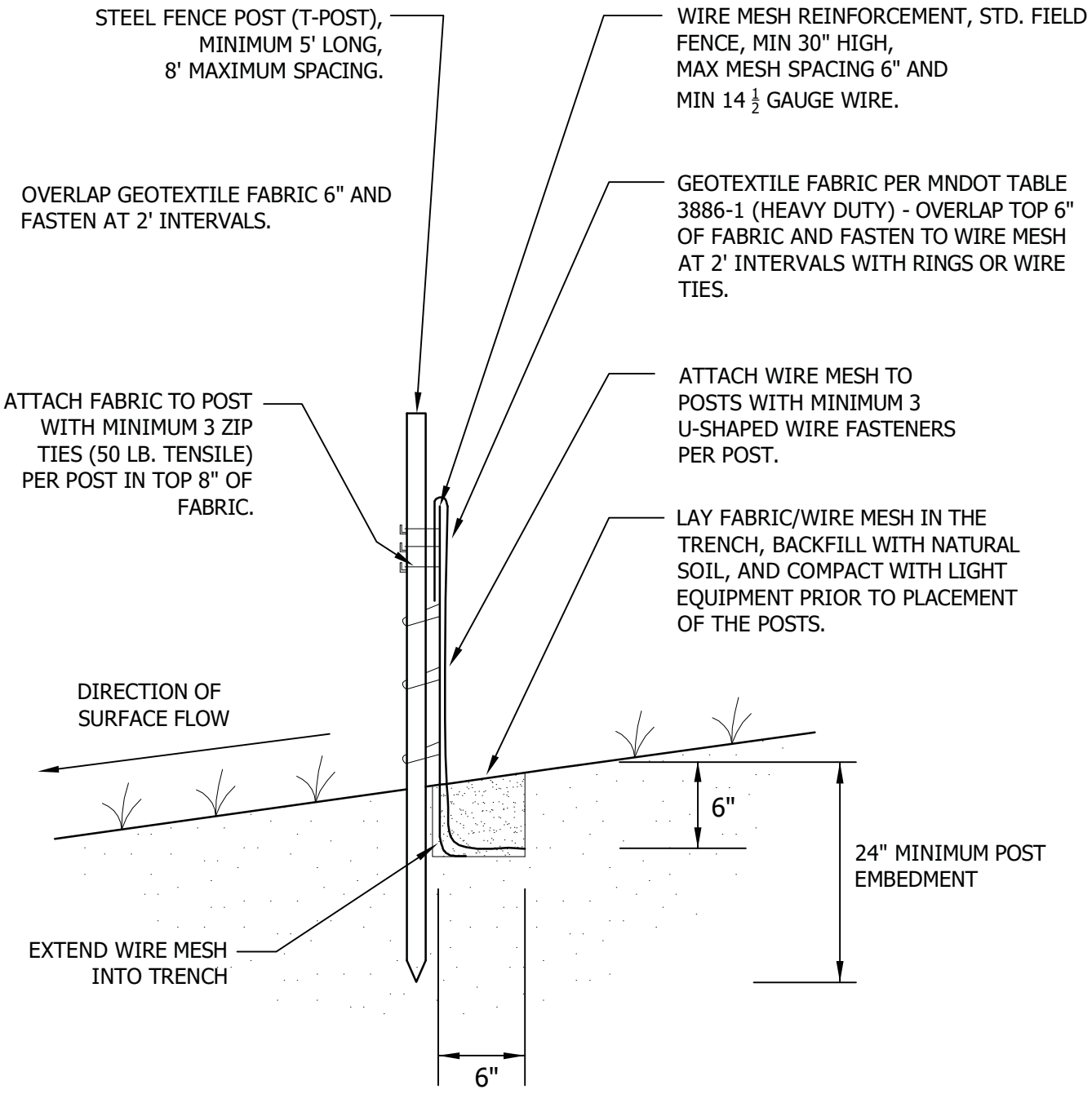

NOTE:
ATTACH FABRIC TO WIRE MESH AND SUPPORT POSTS WITH RINGS OR WIRE TIES.

CITY OF MEDINA

SILT FENCE
SUPER DUTY

LAST REVISION:
JAN 2016

PLATE NO.
ERO-03

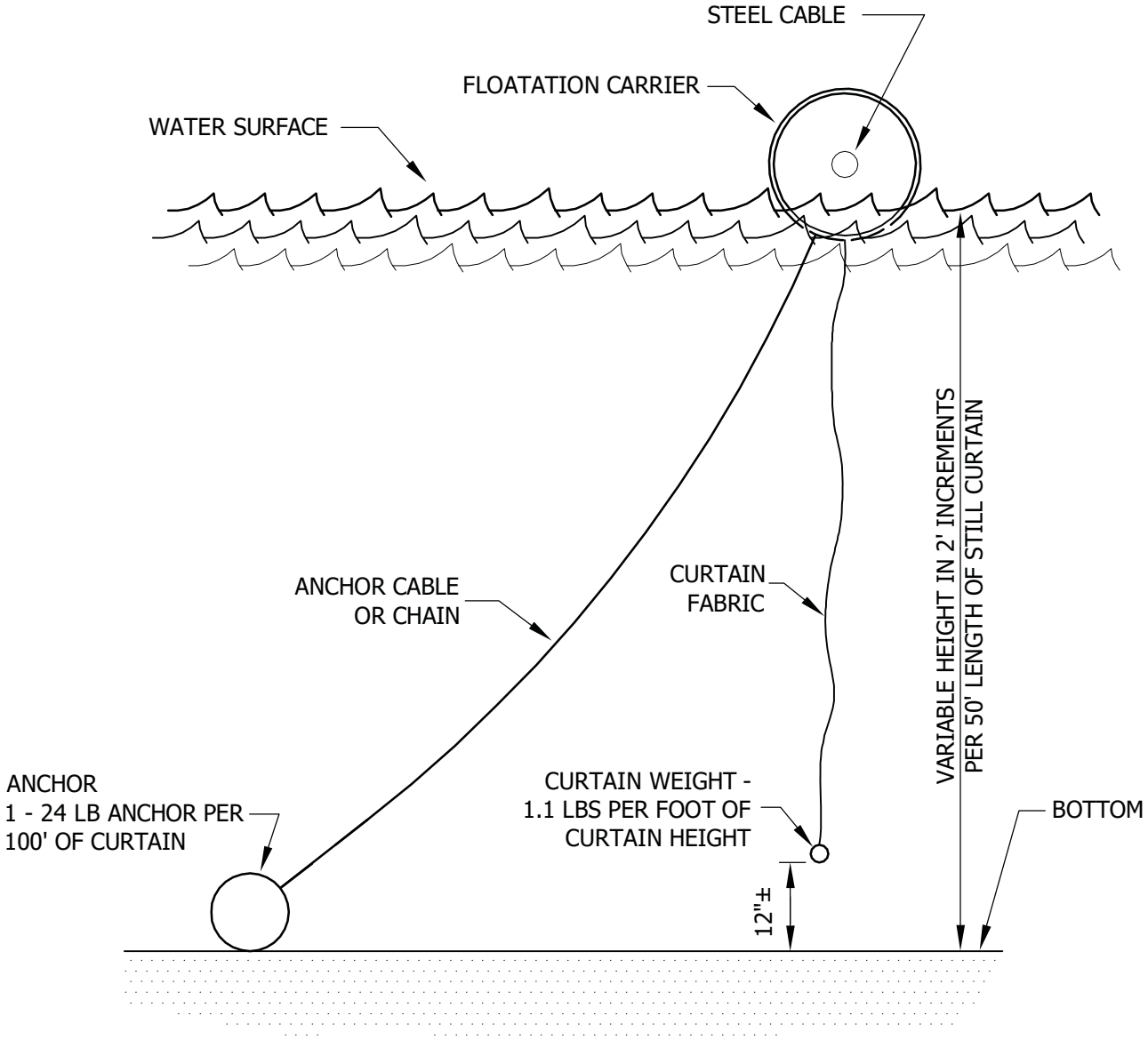

NOTE:

1. DOUBLE SILT FENCES SHOULD BE SPACED 10' APART.
2. CURTAIN LENGTH TO MATCH BOTTOM PROFILE AS CLOSELY AS POSSIBLE.

CITY OF MEDINA

FLOTATION SILT CURTAIN

LAST REVISION:
JAN 2016

PLATE NO.
ERO-04

WOODEN LATH SHALL BE NAILED SECURELY TO THE POST MEMBER TO SECURE FILTER FABRIC.

2" X 4" HORIZONTAL MEMBERS CONTINUOUS AROUND TOP AND BOTTOM. FASTENED TO EACH POST USING 2-20D COMMON NAILS

2" X 4" X 2.5' LONG WOOD POSTS, 8 REQ'D.

MONOFILAMENT GEOTEXTILE FABRIC AS PER MNDOT TABLE 3886-1 (MACHINE SLICED). ADDITIONAL 8-10" OF FABRIC FLAP AT BOTTOM OF BOX

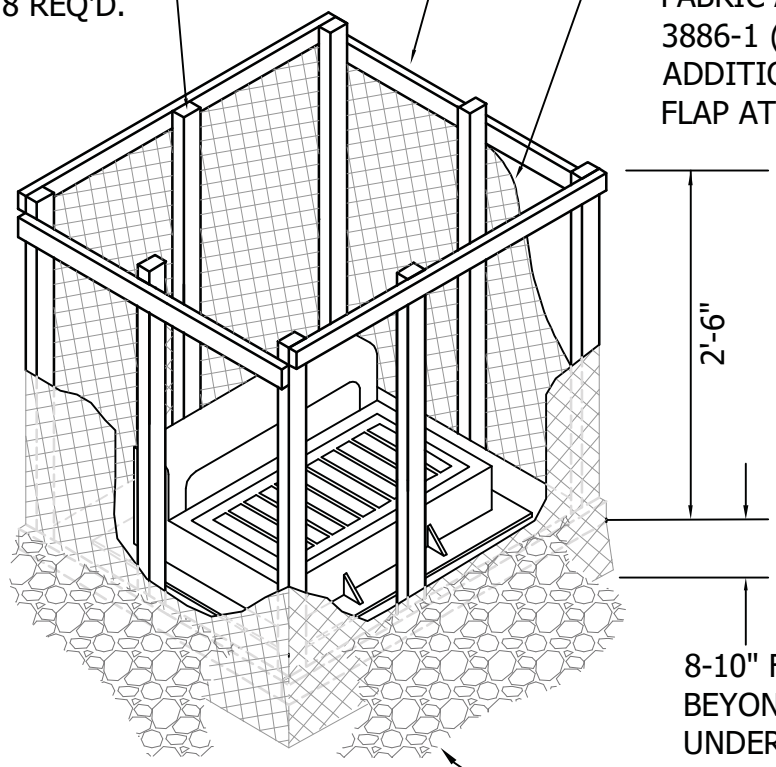

8-10" FABRIC FLAP EXTENDING BEYOND BOTTOM 2"x4" - BURY UNDER ROCK TO PREVENT UNDERWASHING.

1 1/2" WASHED ROCK 1' DEEP X 1' WIDE AROUND OUTSIDE PERIMETER OF SILT FENCING.

NOTES:

CONTRACTOR SHALL CONSTRUCT SILT BOX TO FIT AROUND THE INLET STRUCTURE WITH 6" MINIMUM CLEARANCE TO EDGES OF STRUCTURE. SILT BOX TO BE PLACED ON AN EVEN SURFACE 6" BELOW STRUCTURE OPENING. TOP OF SILT BOX TO EXTEND 18" MINIMUM ABOVE EXISTING GRADE.

CITY OF MEDINA

INLET PROTECTION SILT BOX FOR CATCH BASIN BEFORE ROAD CONSTRUCTION

LAST REVISION: JAN 2016

PLATE NO. ERO-05

2" X 4" HORIZONTAL MEMBERS CONTINUOUS AROUND TOP AND BOTTOM. FASTENED TO EACH POST USING 2-20D COMMON NAILS

WOODEN LATH SHALL BE NAILED SECURELY TO THE POST MEMBER TO SECURE FILTER FABRIC.

MONOFILAMENT GEOTEXTILE FABRIC AS PER MNDOT TABLE 3886-1 (MACHINE SLICED). ADDITIONAL 8-10" OF FABRIC FLAP AT BOTTOM OF BOX

2" X 4" X 2.5' LONG WOOD POSTS, 8 REQ'D.

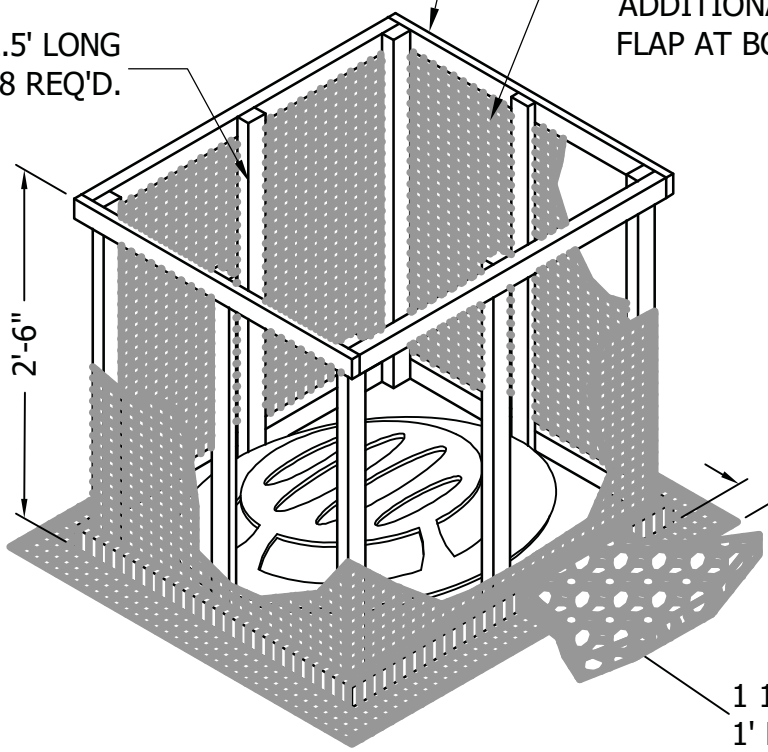

8-10" FABRIC FLAP EXTENDING BEYOND BOTTOM 2"x 4" - BURY UNDER ROCK TO PREVENT UNDERWASHING.

1 1/2" WASHED ROCK 1' DEEP X 1' WIDE

NOTES:

CONTRACTOR SHALL CONSTRUCT SILT BOX TO FIT AROUND THE INLET STRUCTURE WITH 6" MINIMUM CLEARANCE TO EDGES OF STRUCTURE. SILT BOX TO BE PLACED ON AN EVEN SURFACE 6" BELOW STRUCTURE OPENING. TOP OF SILT BOX TO EXTEND 18" MINIMUM ABOVE EXISTING GRADE.

CITY OF MEDINA

INLET PROTECTION SILT BOX FOR BEEHIVE CASTING

LAST REVISION: JAN 2016

PLATE NO. ERO-06

PLAN

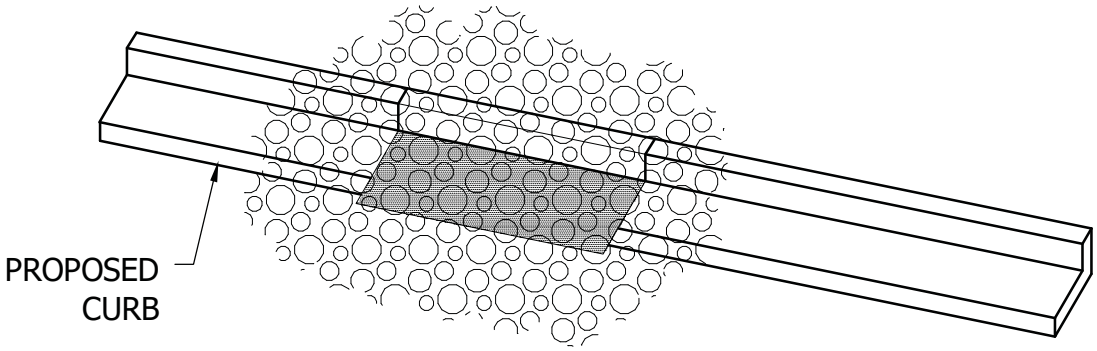

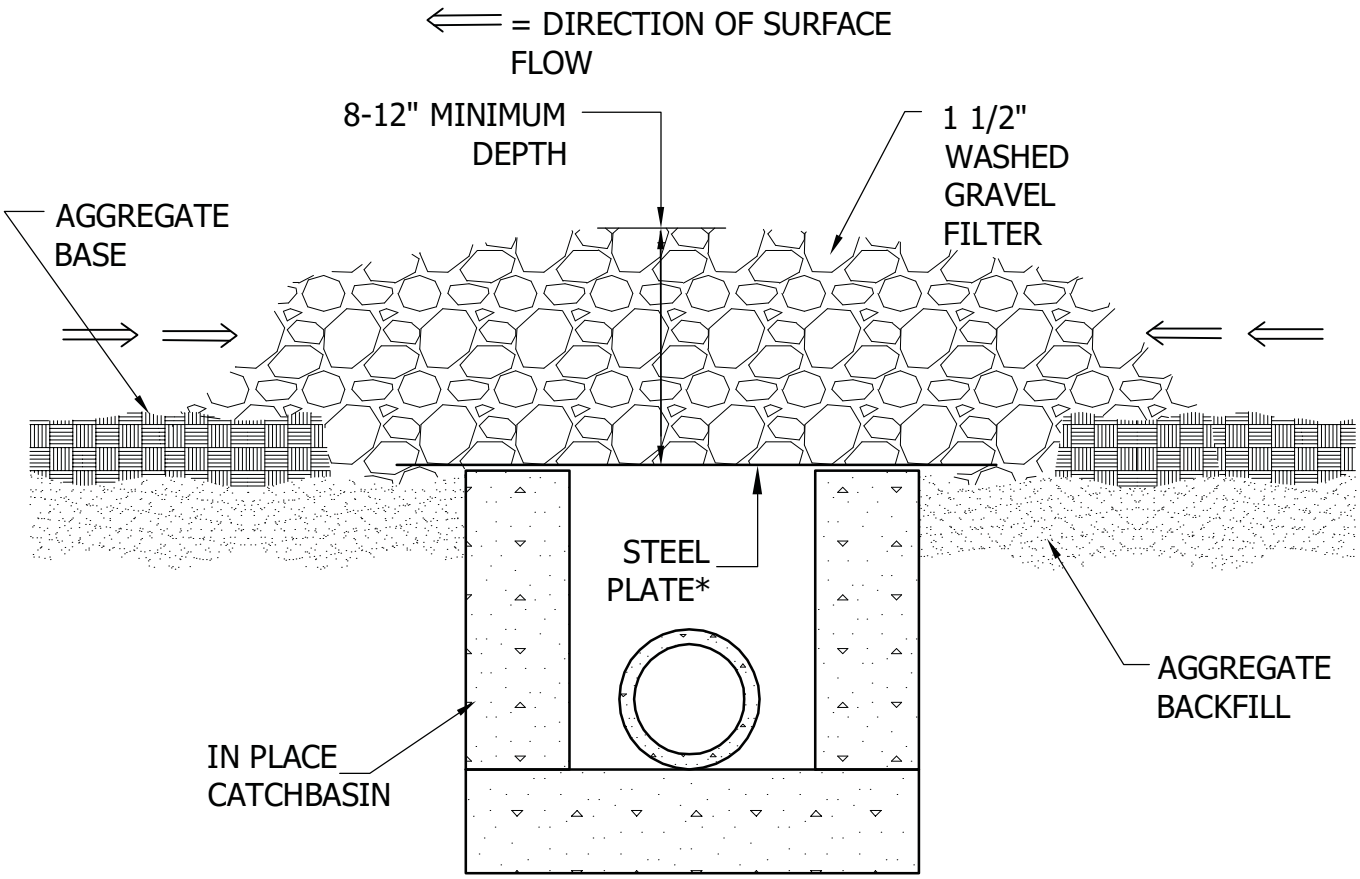

* HOLES SHALL BE DRILLED IN STEEL PLATE TO ALLOW DRAINAGE INTO THE CATCHBASIN.

CITY OF MEDINA

INLET PROTECTION ROCK FILTER FOR CATCH BASIN DURING ROAD CONSTRUCTION

LAST REVISION:
JAN 2016

PLATE NO.
ERO-07

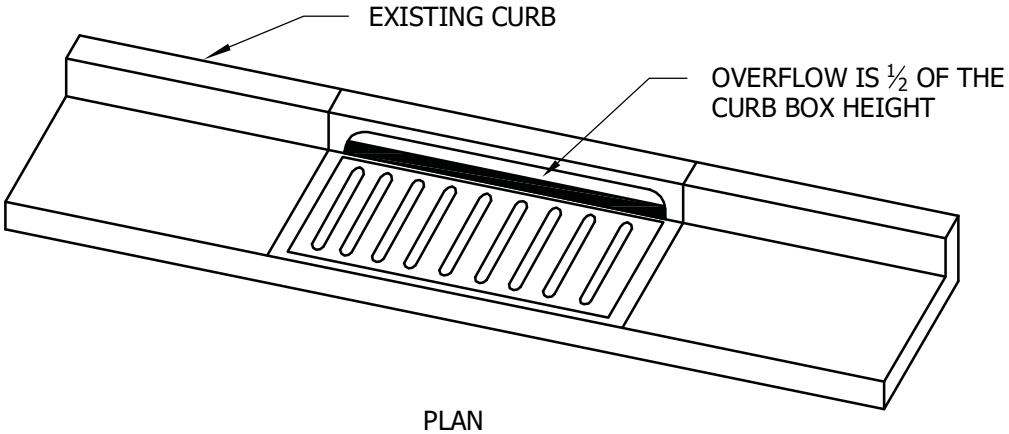

PLAN

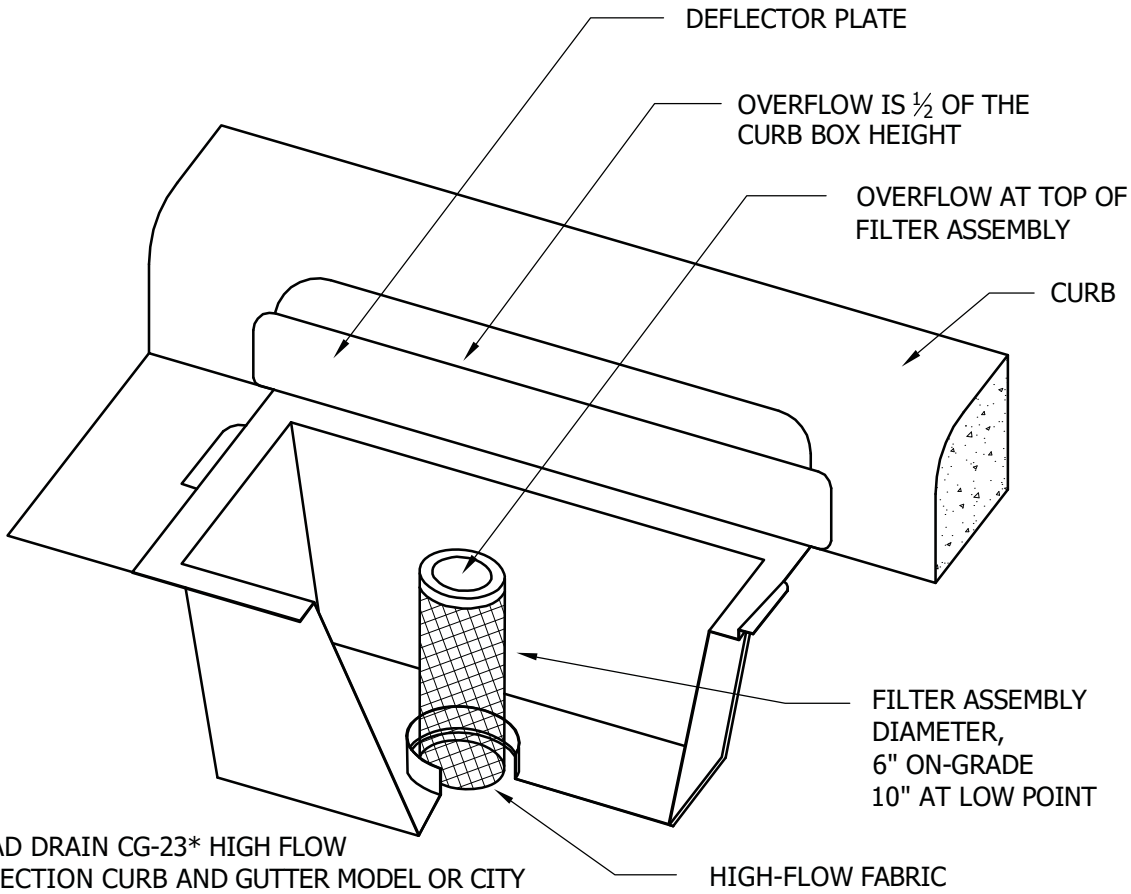

WIMCO ROAD DRAIN CG-23* HIGH FLOW INLET PROTECTION CURB AND GUTTER MODEL OR CITY APPROVED EQUAL.

NOTE:
*FOR THE NEW R-3290-VB STANDARD CASTING, INSTALL WIMCO ROAD DRAIN CG-3290 OR CITY APPROVED EQUAL

CITY OF MEDINA

INLET PROTECTION CATCH BASIN INSERT AFTER PAVING

LAST REVISION:
JAN 2016

PLATE NO.
ERO-08

A. SILT FENCE AROUND BEEHIVE

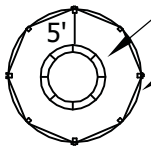

STORM SEWER CATCHBASIN

SILT FENCE INSTALLED AS PER DETAIL PLATE ERO-01.

NOTE:

1. MINIMUM OF 8 - 2" X 2" WOOD POSTS OR STEEL POSTS ARE REQUIRED.
2. INSTALL BRACING AT THE TOP OF THE WOOD POSTS SUCH THAT THE POSTS ARE SUPPORTED FROM OUTSIDE FORCES.

B. SILT FENCE AT FLARED END SECTION

TOP OF SILT FENCE TO BE LOWER THAN LOWEST ADJACENT OVERFLOW

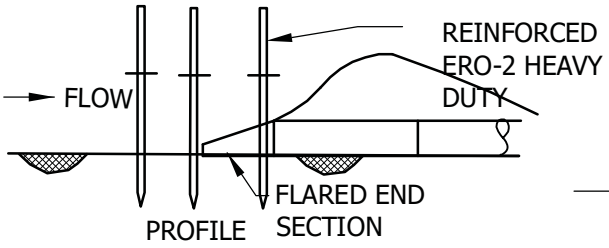

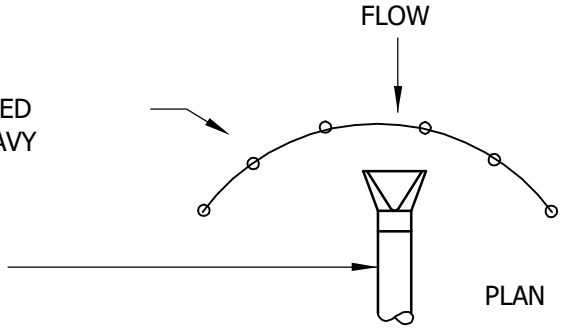

CITY OF MEDINA

BEEHIVE CASTING AND FLARED END SECTION EROSION CONTROL

LAST REVISION: JAN 2016

PLATE NO. ERO-09

NOTE:
POINT 1 MUST BE A MINIMUM 6" HIGHER THAN POINT 2 TO ENSURE THAT WATER FLOWS OVER THE SILT FENCE AND NOT AROUND THE ENDS.

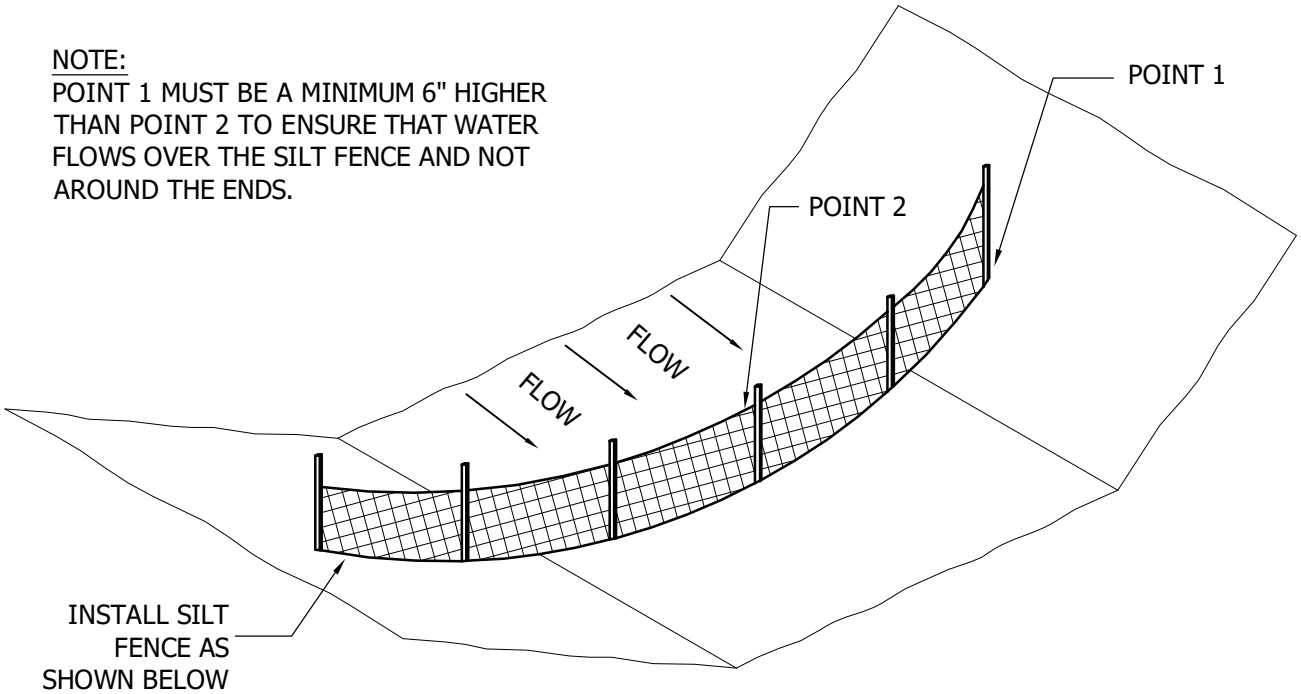

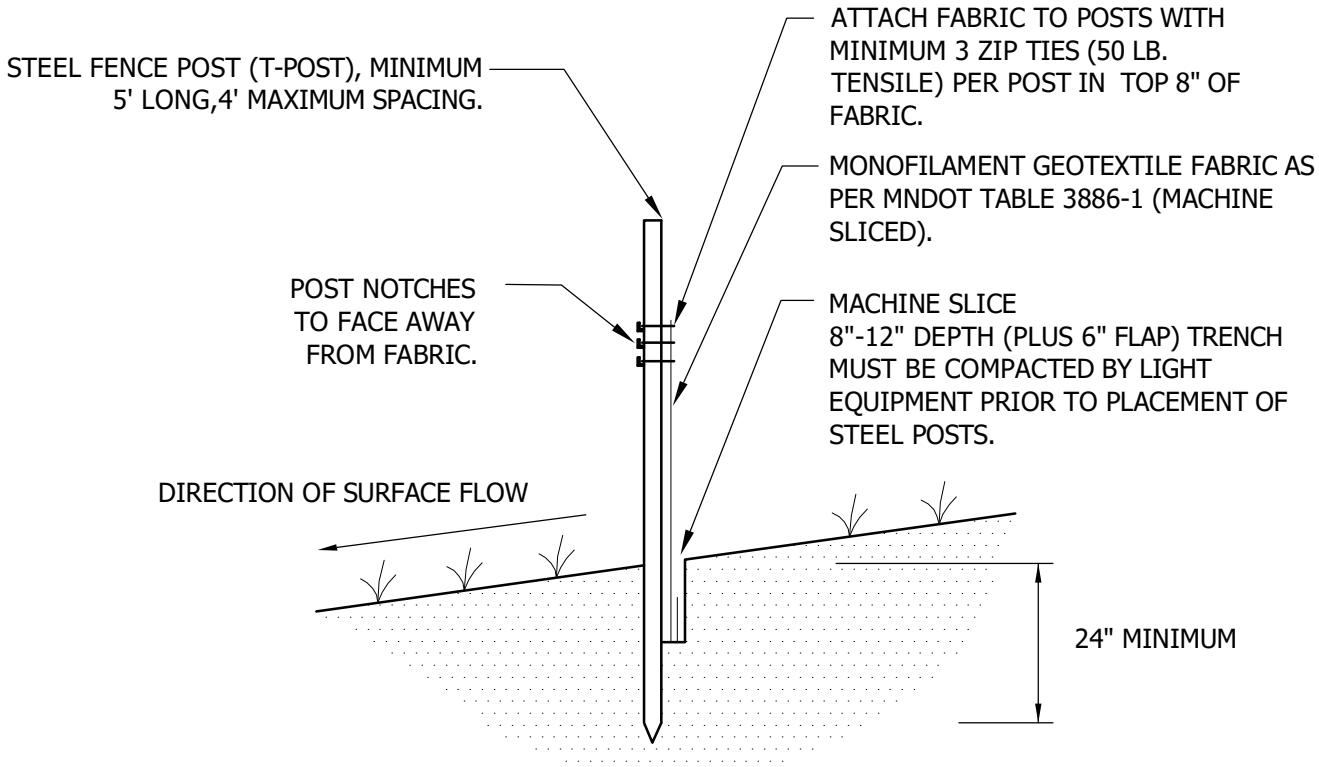

CITY OF MEDINA

DITCH CHECK
MACHINE SLICED SILT FENCE

LAST REVISION:
JAN 2016

PLATE NO.
ERO-10

PLAN VIEW

SILT FENCE WITH ROCK DIVERSION MOUND

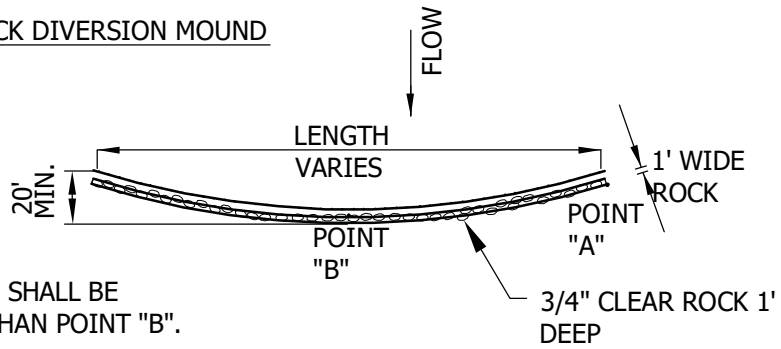

NOTE:
POINT "A" SHALL BE HIGHER THAN POINT "B".

SPACING FOR ALL DITCH BLOCKS:	
DITCH GRADE	SPACING
(%)	(FT)
2	100
4	75
6	50
8	40
10	25
10+	25

CITY OF MEDINA

DITCH BLOCKING

LAST REVISION:
JAN 2016

PLATE NO.
ERO-11

I. SMALL CHECK DAM

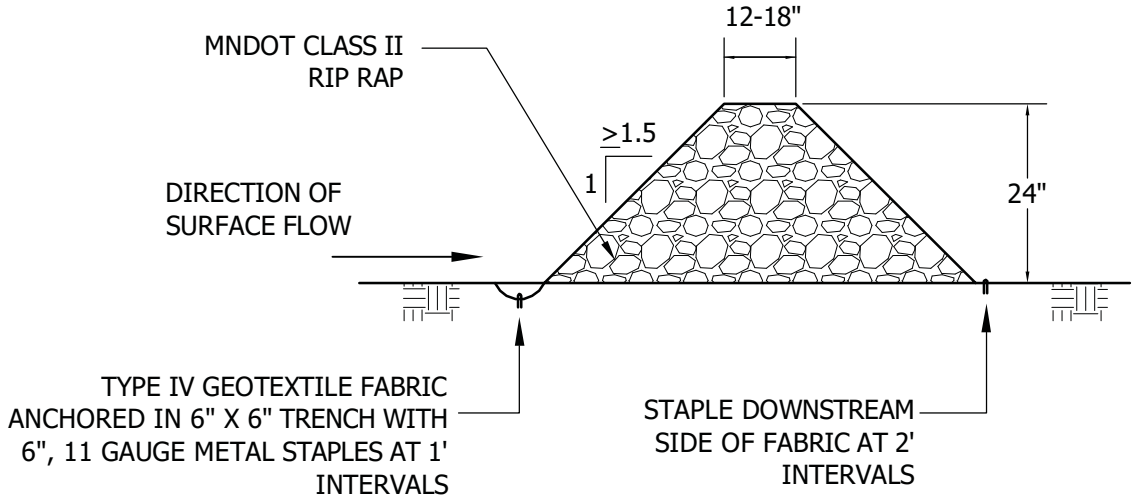

II. LARGE CHECK DAM

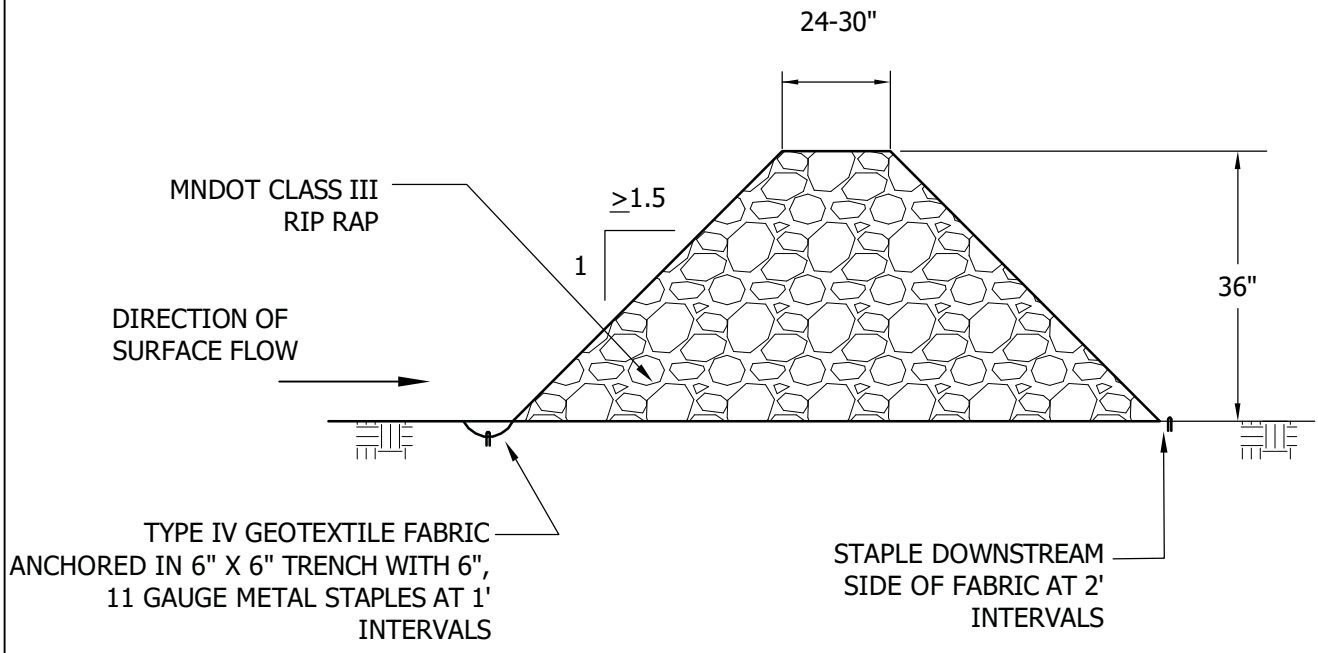

CITY OF MEDINA

DITCH CHECK
SMALL/LARGE CHECK DAM

LAST REVISION:
JAN 2016

PLATE NO.
ERO-12

I. ROCK WEEPER

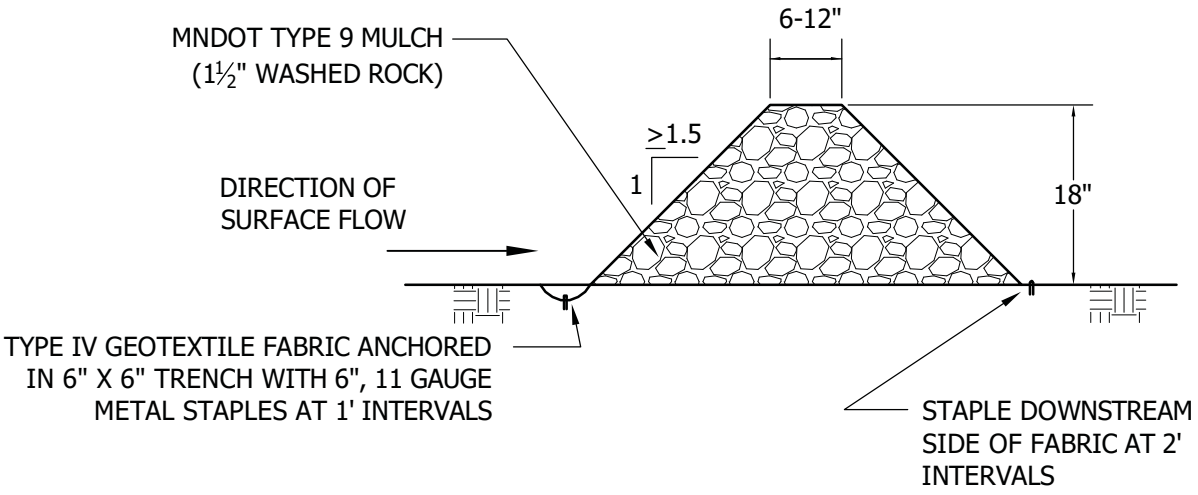

II. BIO WEEPER

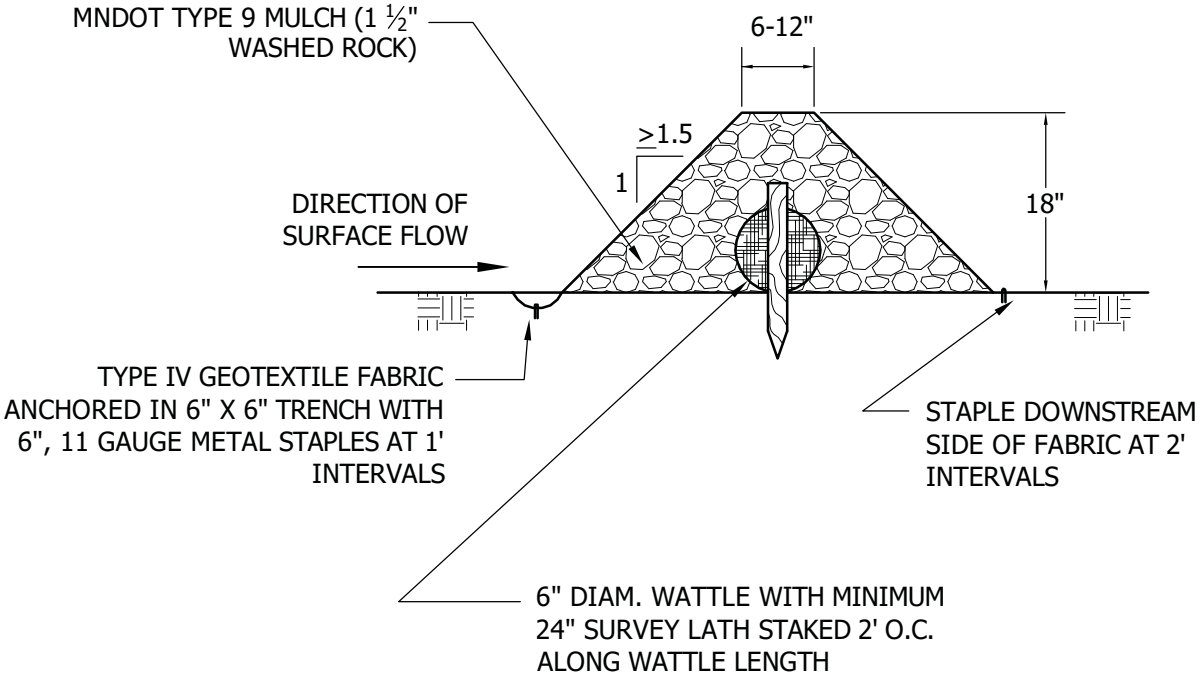

CITY OF MEDINA

DITCH CHECK
ROCK/BIO WEEPER

LAST REVISION:
JAN 2016

PLATE NO.
ERO-13

ANCHOR TRENCH:
1) DIG 6"X6" TRENCH
2) LAY BLANKET IN TRENCH
3) STAPLE AT 1.5' INTERVALS
4) BACKFILL WITH NATURAL SOIL AND COMPACT

NOTE:
POINT 1 MUST BE A MINIMUM OF 6" HIGHER THAN POINT 2 TO ENSURE THAT WATER FLOWS OVER THE DIKE AND NOT AROUND THE ENDS.

NOTE:
STAPLE DENSITY SHALL CONFORM TO MANUFACTURERS SPECIFICATIONS.

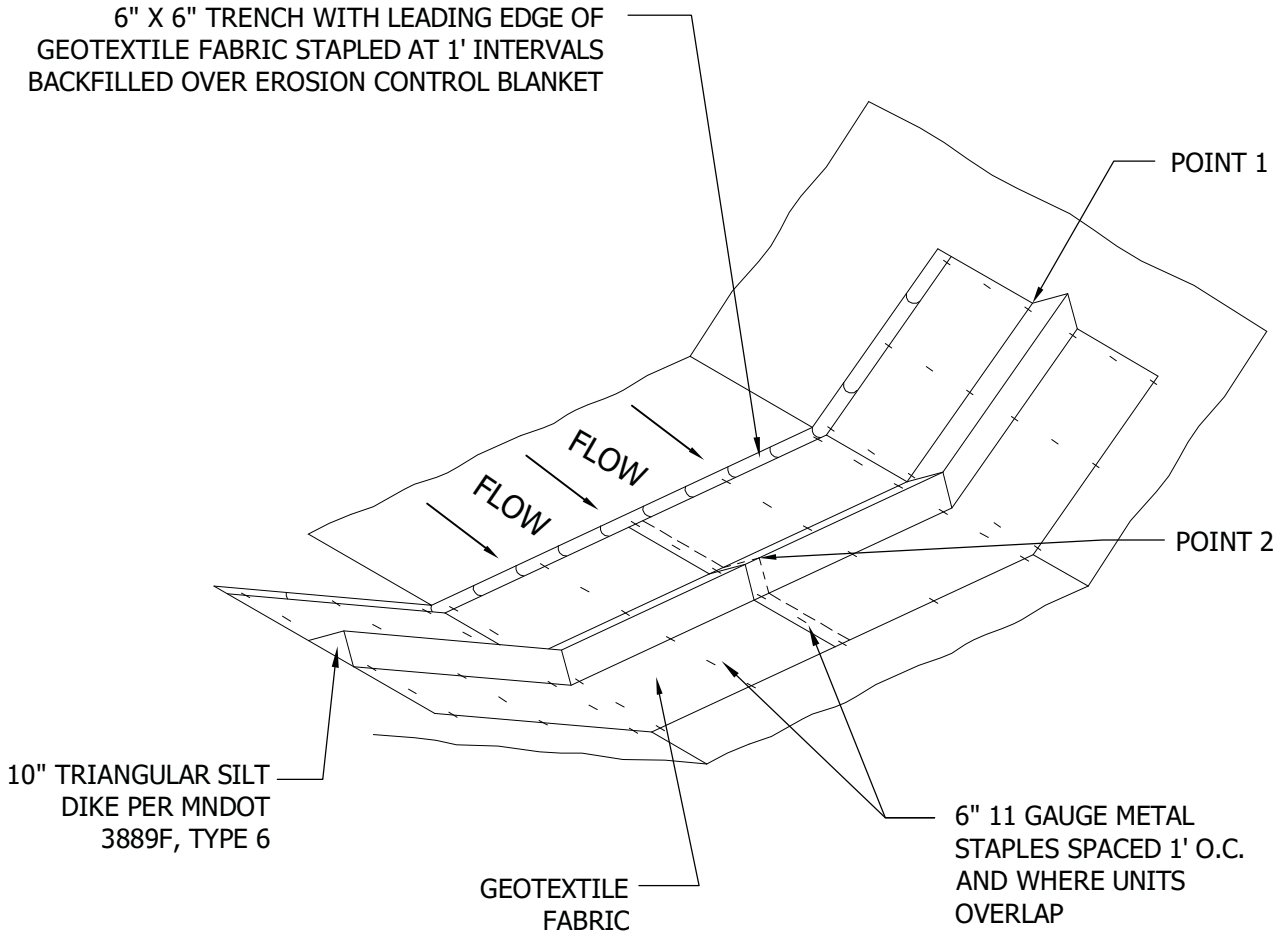

CITY OF MEDINA

DITCH CHECK
TRAINGULAR SILT DIKE

LAST REVISION:
JAN 2016

PLATE NO.
ERO-14

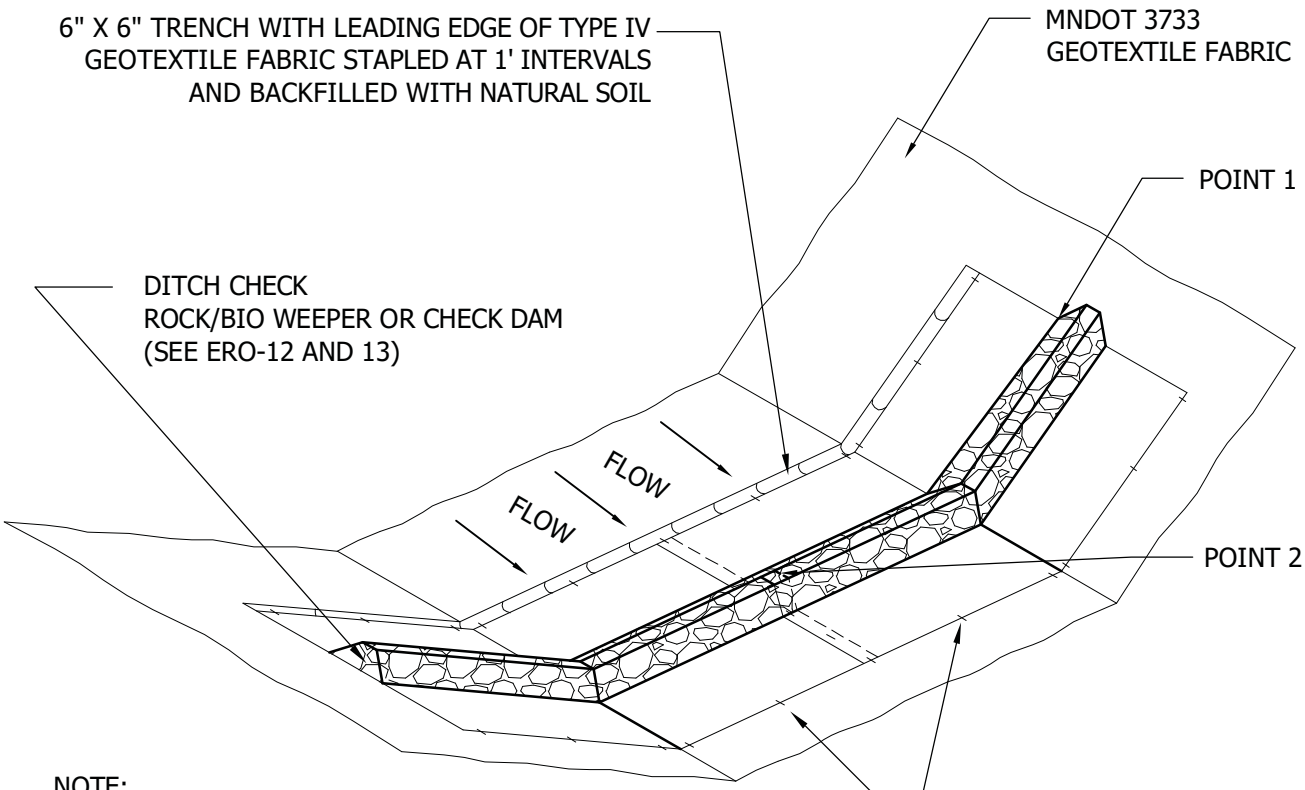

NOTE:
POINT 1 MUST BE A MINIMUM OF 6" HIGHER THAN POINT 2 TO ENSURE THAT WATER FLOWS OVER THE DITCH CHECK AND NOT AROUND THE ENDS.

DITCH CHECK SPACING
(USE FOR DETAILS ER0-12, 13, 14)

DITCH GRADE	INTERVAL
(%)	(FT)
2	100
4	75
6	50
8	40
10	25
10+	25

CITY OF MEDINA

DITCH CHECK
SPACING FOR ROCK/BIO DAM

LAST REVISION:
JAN 2016

PLATE NO.
ERO-15

LAYOUT PLAN

SILT FENCE AND SNOW FENCE

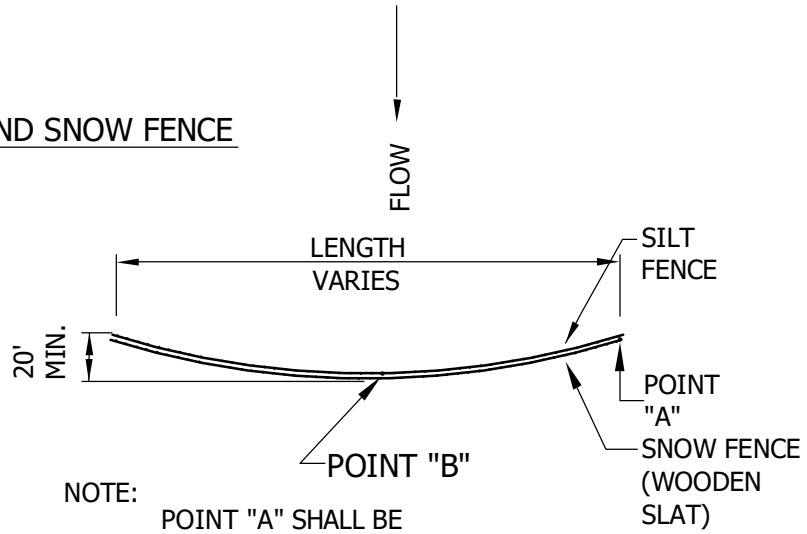

NOTE:
POINT "A" SHALL BE HIGHER THAN POINT "B".

SPACING FOR ALL DRAINAGE BLOCKS:	
DITCH GRADE	SPACING
(%)	(FT)
2	100
4	75
6	50
8	40
10	25
10+	25

CITY OF MEDINA

SHEET DRAINAGE EROSION CONTROL

LAST REVISION:
JAN 2016

PLATE NO.
ERO-16

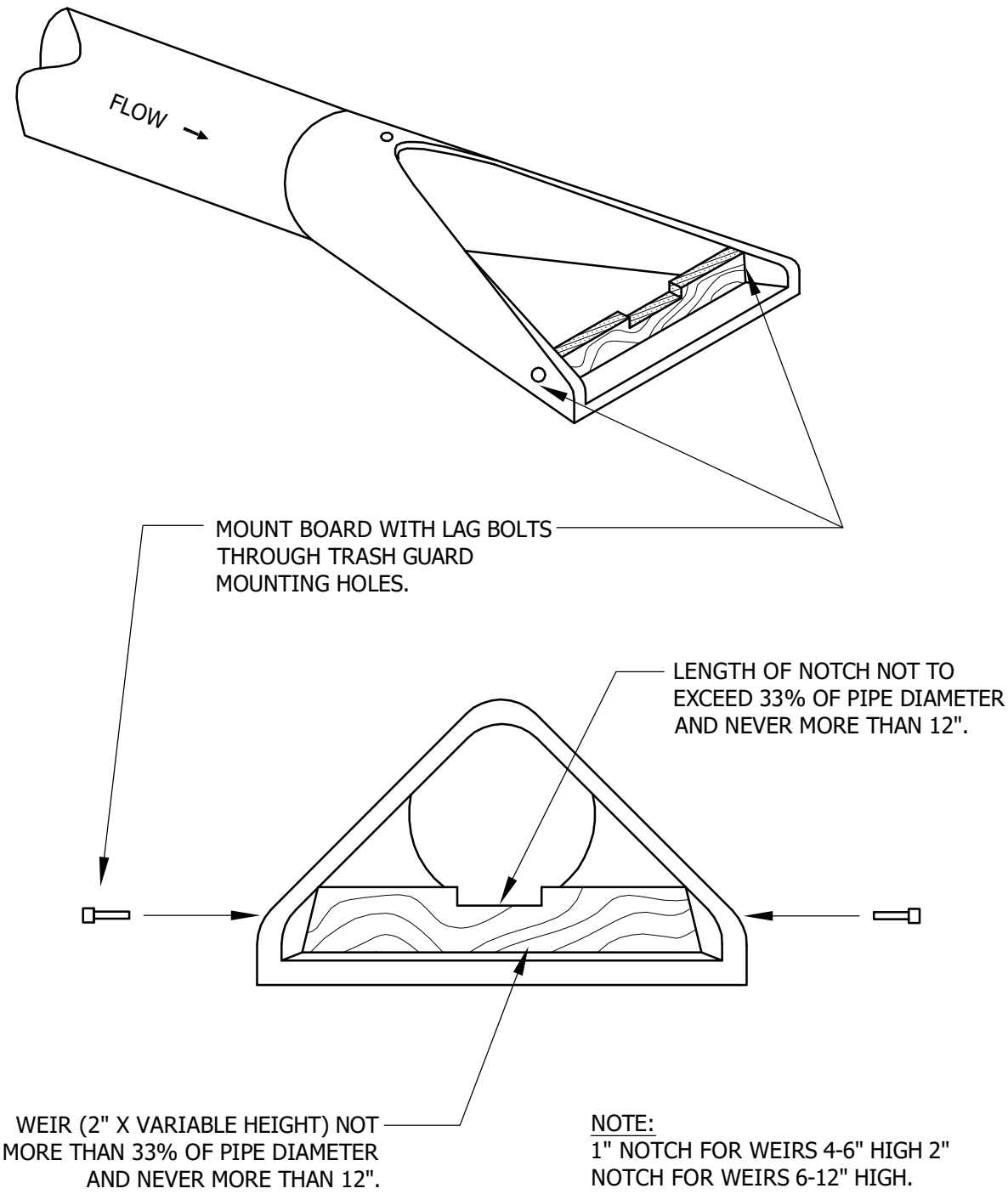

NOTE:
1" NOTCH FOR WEIRS 4-6" HIGH 2" NOTCH FOR WEIRS 6-12" HIGH.

CITY OF MEDINA

PIPE CHECK
WOODEN WEIR

LAST REVISION:
JAN 2016

PLATE NO.
ERO-17

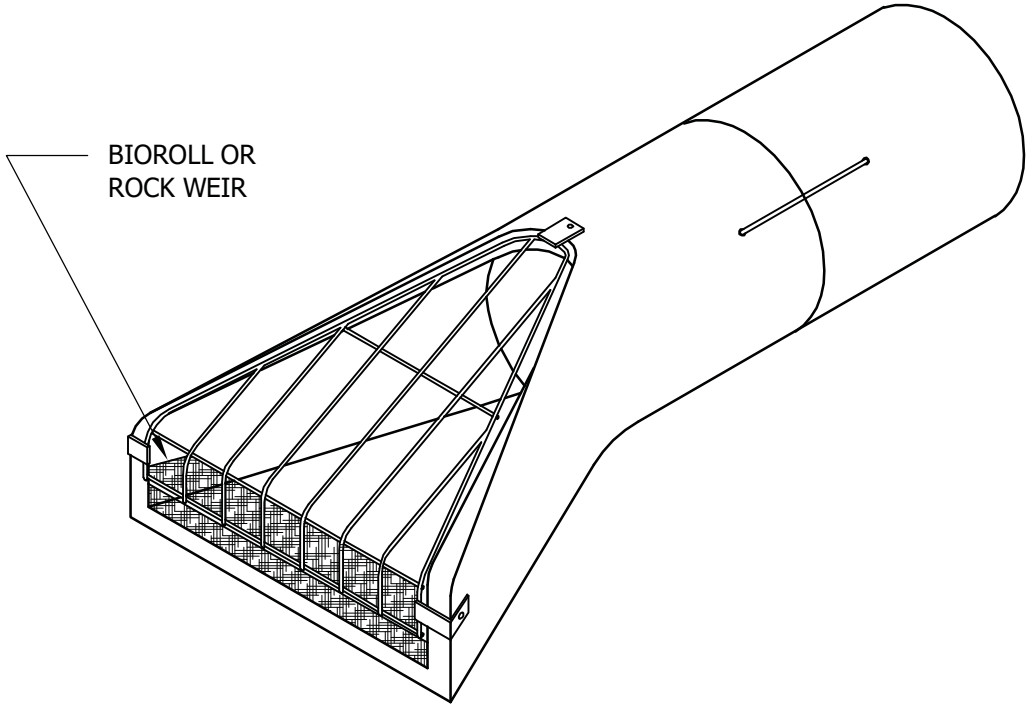

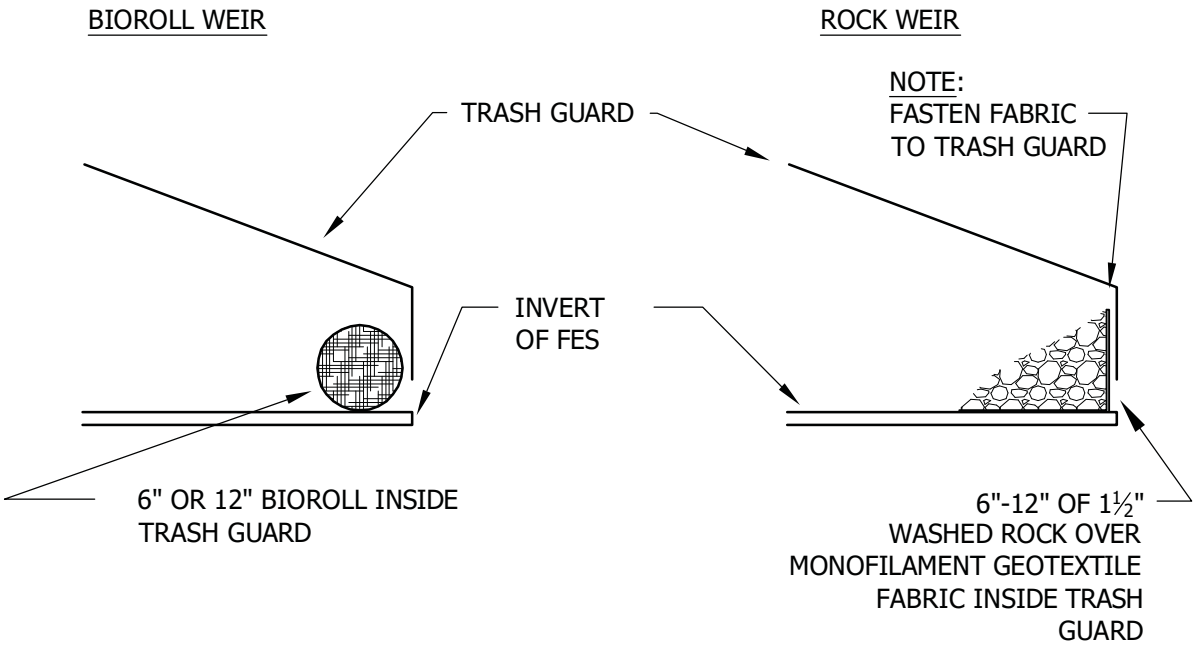

CITY OF MEDINA

PIPE CHECK
BIOROLL/ROCK WEIR

LAST REVISION:
JAN 2016

PLATE NO.
ERO-18

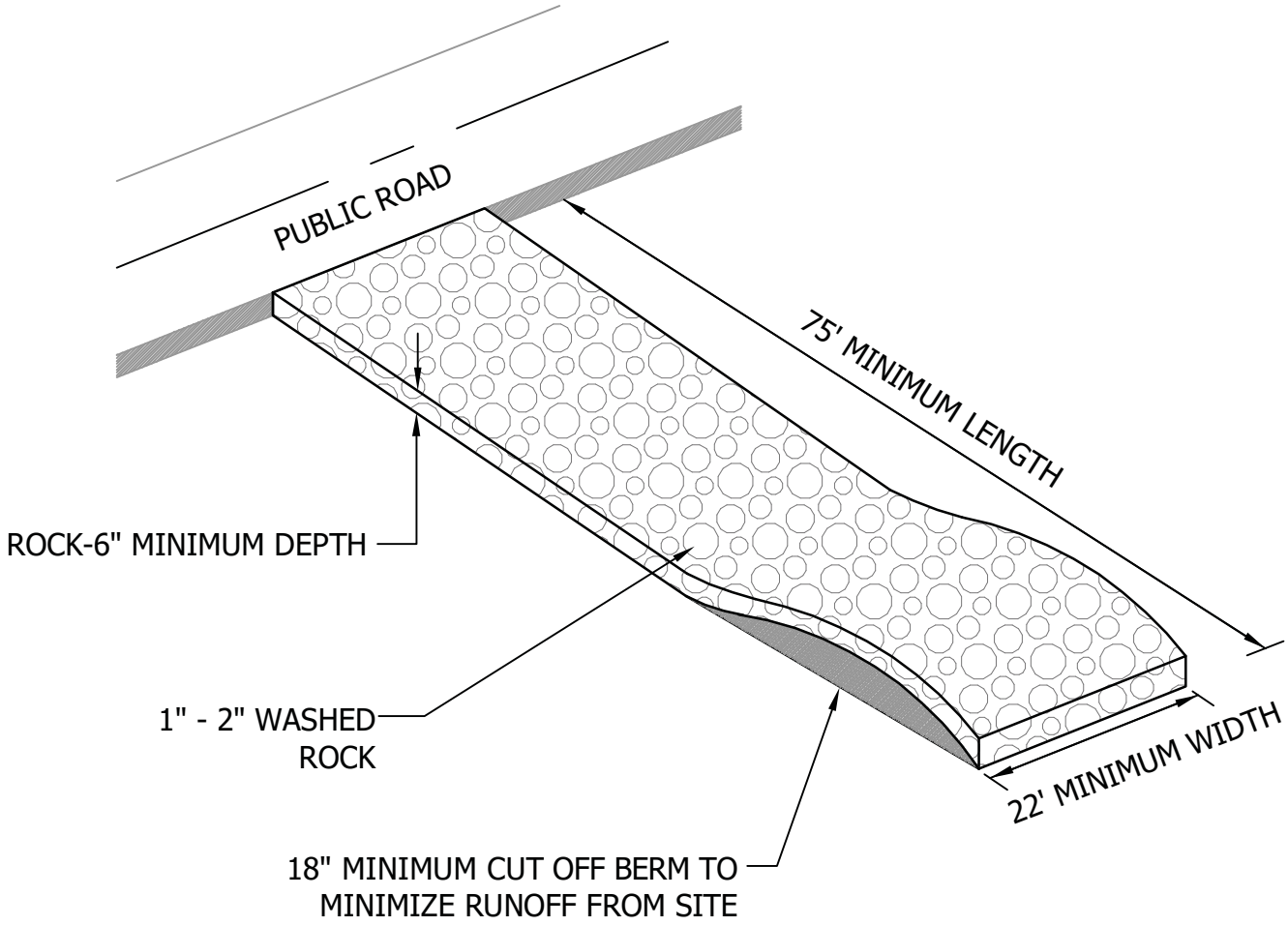

NOTES:

1. MNDOT 3733 TYPE 4 FILTER FABRIC SHALL BE PLACED UNDER ROCK TO STOP MUD MIGRATION THROUGH MATERIAL.
2. FUGITIVE ROCK WILL BE REMOVED FROM ADJACENT ROADWAYS DAILY OR MORE FREQUENTLY AS NECESSARY.
3. CONSTRUCTION ENTRANCE MUST BE CONSTRUCTED PRIOR TO THE COMMENCEMENT OF GRADING OPERATIONS ON THE SITE.
4. THE ENTRANCE MUST BE MAINTAINED IN PROPER CONDITION TO PREVENT TRACKING OF MUD OFF THE SITE. THIS MAY REQUIRE PERIODIC TOPDRESSING WITH ADDITIONAL ROCK OR REMOVAL AND REINSTALLATION OF THE PAD.
5. THIS ENTRANCE WILL BE USED BY ALL VEHICLES ENTERING OR LEAVING THE PROJECT.
6. THE CONSTRUCTION ENTRANCE WILL BE REMOVED PRIOR TO THE PLACEMENT OF BITUMINOUS SURFACING.
7. RESIDENTIAL 25FT WIDTH, COMMERCIAL 50FT WIDTH

CITY OF MEDINA

ROCK CONSTRUCTION ENTRANCE

LAST REVISION: JAN 2016

PLATE NO. ERO-19A

SPECIAL NOTE:

SPECIAL ATTENTION SHALL BE PAID WHEN INSTALLING DRIVEWAYS TO NOT UNDERMINE OR DAMAGE EXISTING SIDEWALKS.

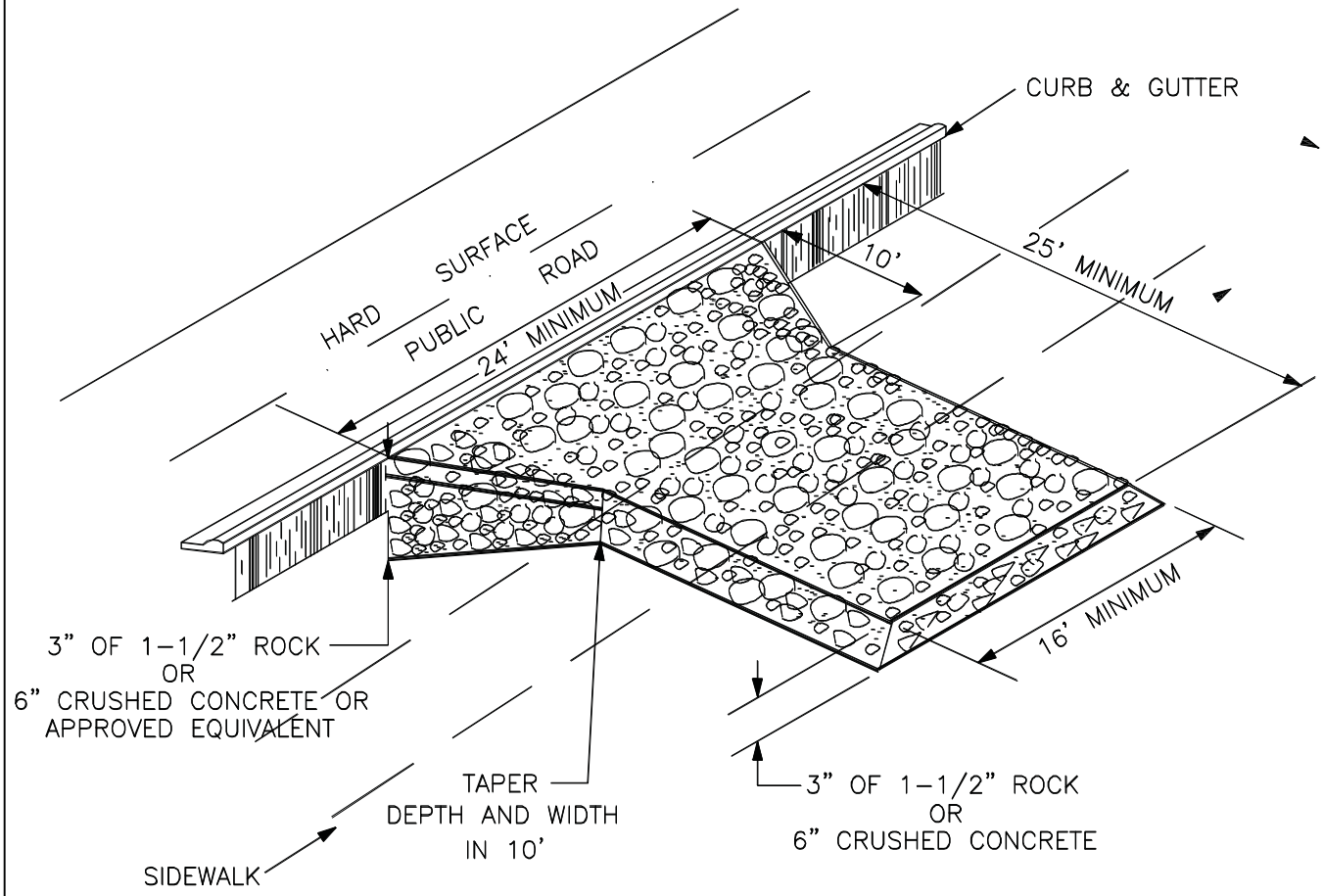

CITY OF MEDINA

RESIDENTIAL CONSTRUCTION ENTRANCE
ROCK
WOOD / MULCH

LAST REVISION:
JAN 2016

PLATE NO.
ERO-19B

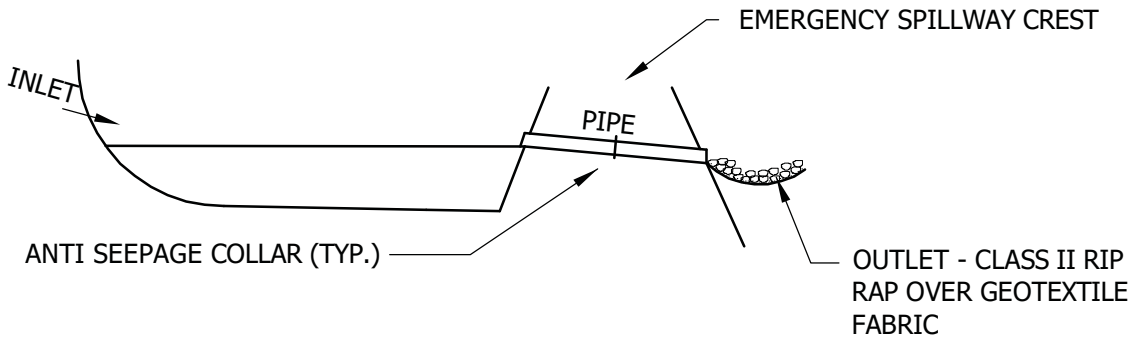

TEMPORARY SEDIMENTATION BASIN WITH OUTLET PIPE

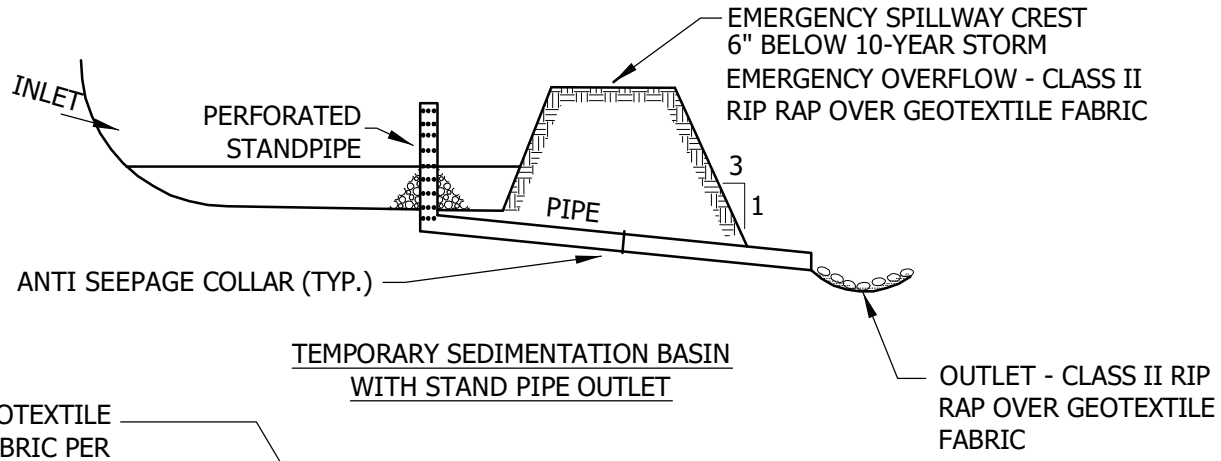

TEMPORARY SEDIMENTATION BASIN WITH STAND PIPE OUTLET

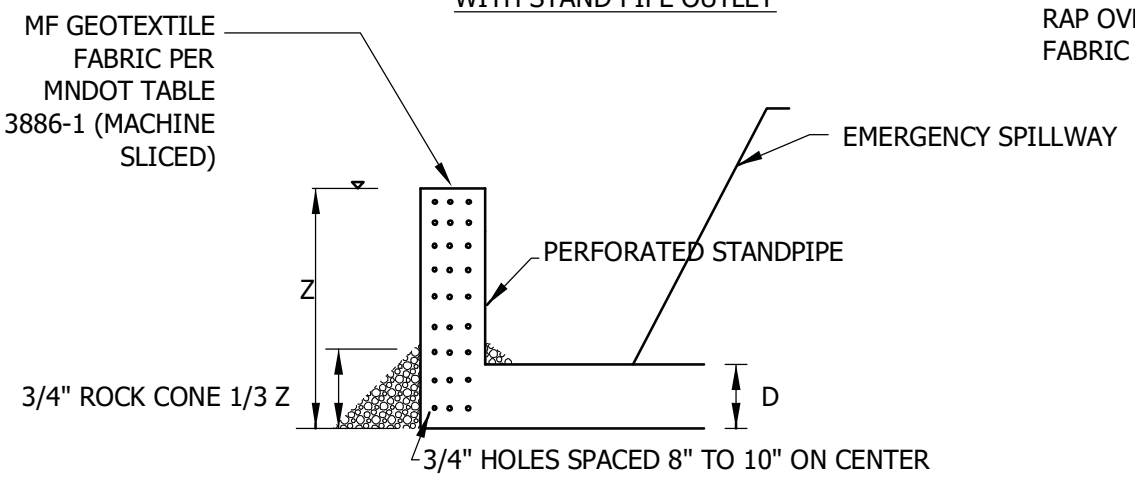

D = DIAMETER OF STANDPIPE EQUAL TO DIAMETER OF PIPE.

NOTE:

PIPE MATERIAL MUST BE RIGID.

STAND PIPE DETAIL

CITY OF MEDINA

TEMPORARY SEDIMENTATION BASIN WITH OUTLET PIPE

LAST REVISION: JAN 2016

PLATE NO. ERO-20

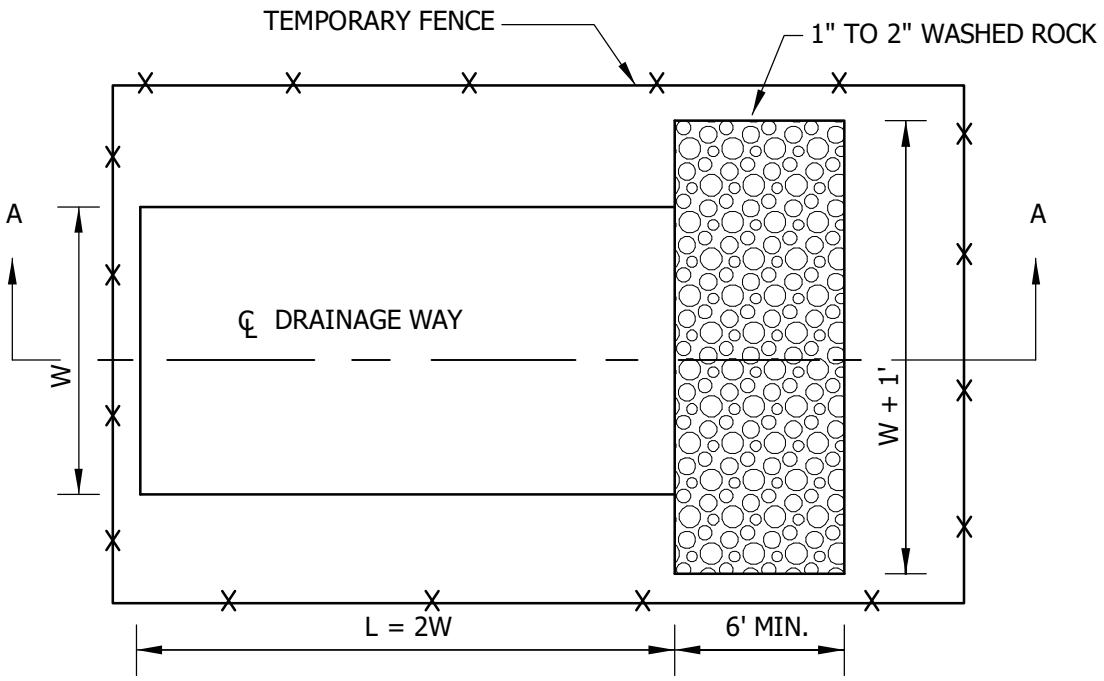

PLAN VIEW

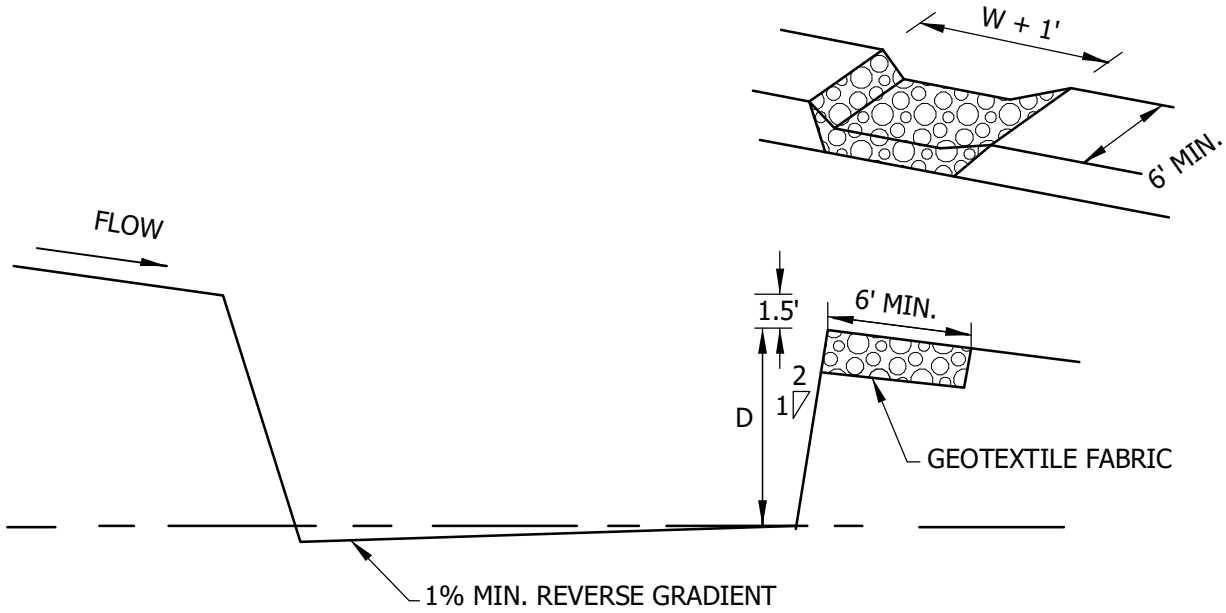

NOTE:
D = 3' MIN., 5' MAX.
W = 10' MIN., 20' MAX.

SECTION A-A

CITY OF MEDINA

TEMPORARY SEDIMENTATION BASIN
WITH OVERFLOW SPILLWAY

LAST REVISION:
JAN 2016

PLATE NO.
ERO-21

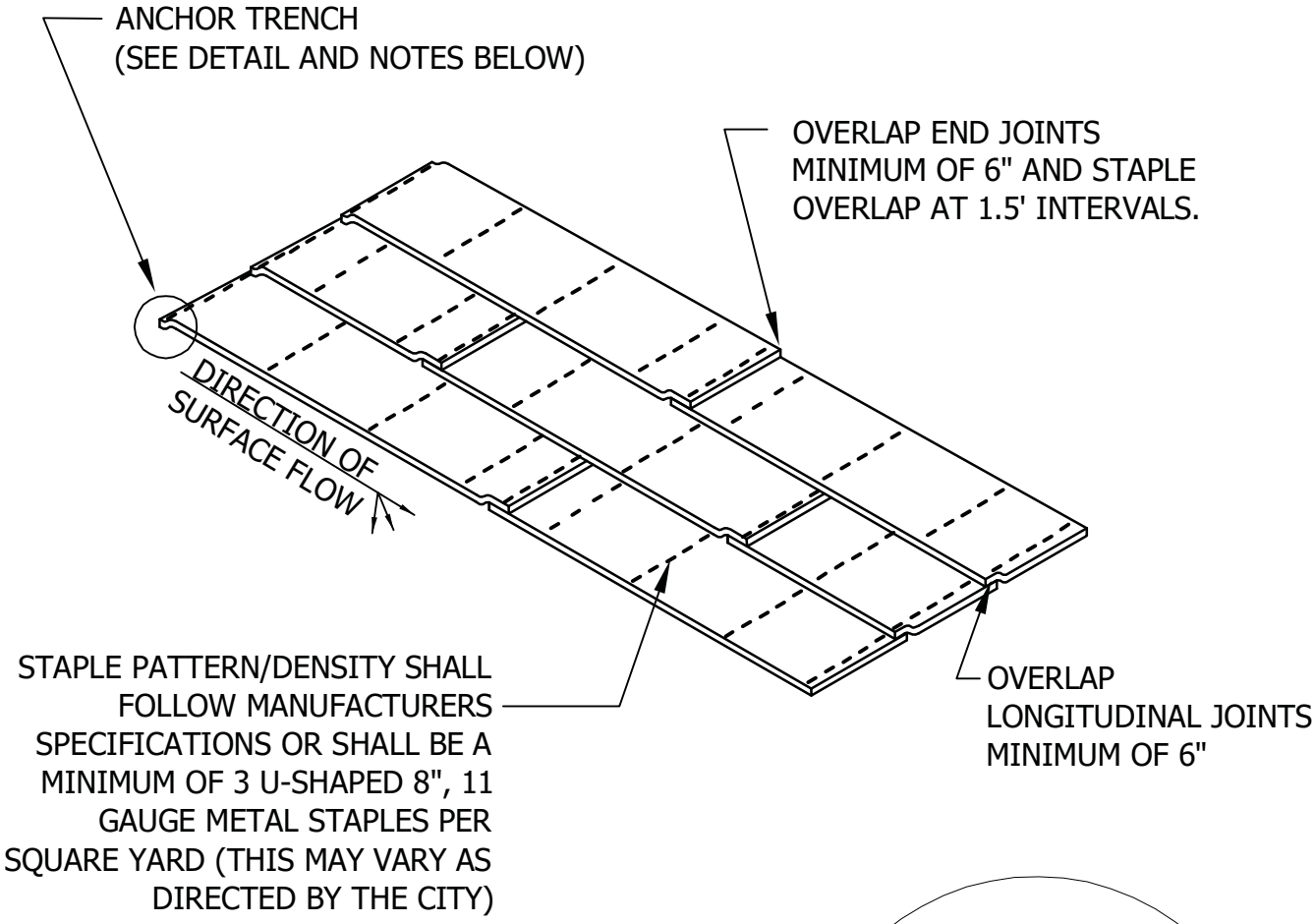

ANCHOR TRENCH

1. DIG 6" X 6" TRENCH
2. LAY BLANKET IN TRENCH
3. STAPLE AT 1.5' INTERVALS
4. BACKFILL WITH NATURAL SOIL AND COMPACT
5. BLANKET LENGTH SHALL NOT EXCEED 100' WITHOUT AN ANCHOR TRENCH

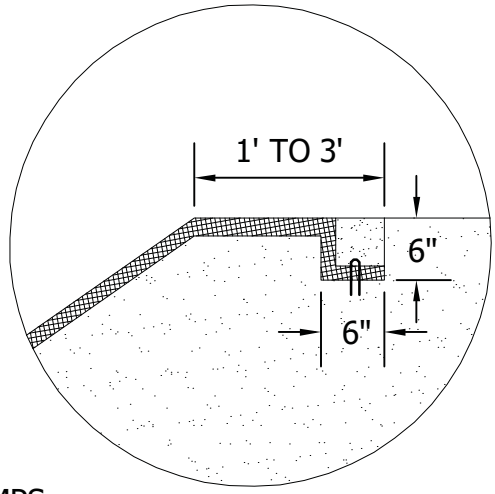

NOTE:

SLOPE SURFACE SHALL BE FREE OF ROCKS, SOIL CLUMPS, STICKS, VEHICLE IMPRINTS, AND GRASS. BLANKETS SHALL HAVE GOOD SOIL CONTACT.

CITY OF MEDINA

EROSION CONTROL BLANKET INSTALLATION

LAST REVISION: JAN 2016

PLATE NO. ERO-22

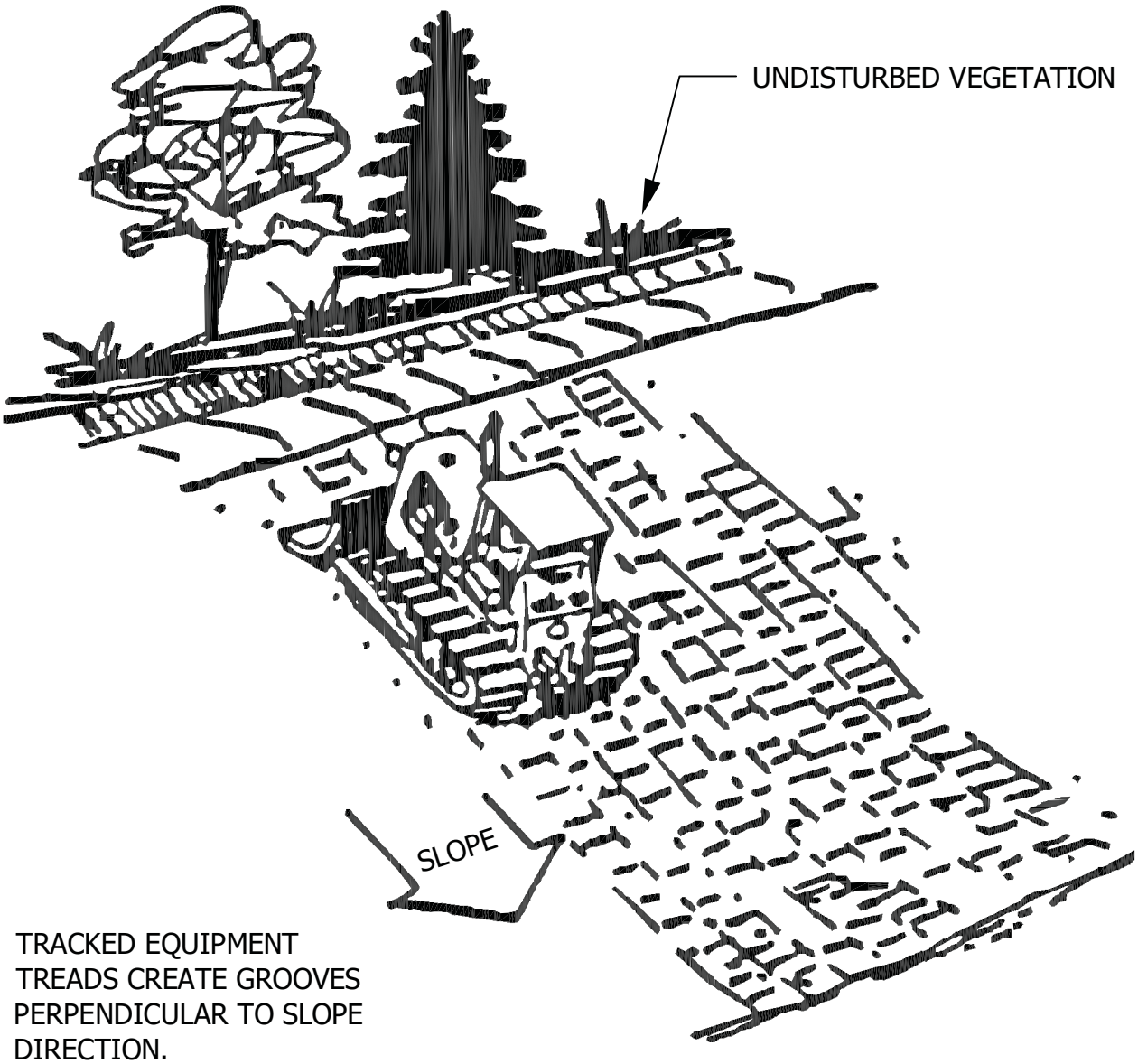

TRACKED EQUIPMENT TREADS CREATE GROOVES PERPENDICULAR TO SLOPE DIRECTION.

NOTE:
ALL SLOPES WITH A GRADE EQUAL TO OR STEEPER THAN 3:1 REQUIRE SLOPE TRACKING. SLOPES WITH A GRADE MORE GRADUAL THAN 3:1 REQUIRE SLOPE TRACKING IF THE STABILIZATION METHOD IS EROSION CONTROL BLANKET OR HYDROMULCH.

CITY OF MEDINA

SLOPE TRACKING

LAST REVISION:
JAN 2016

PLATE NO.
ERO-23

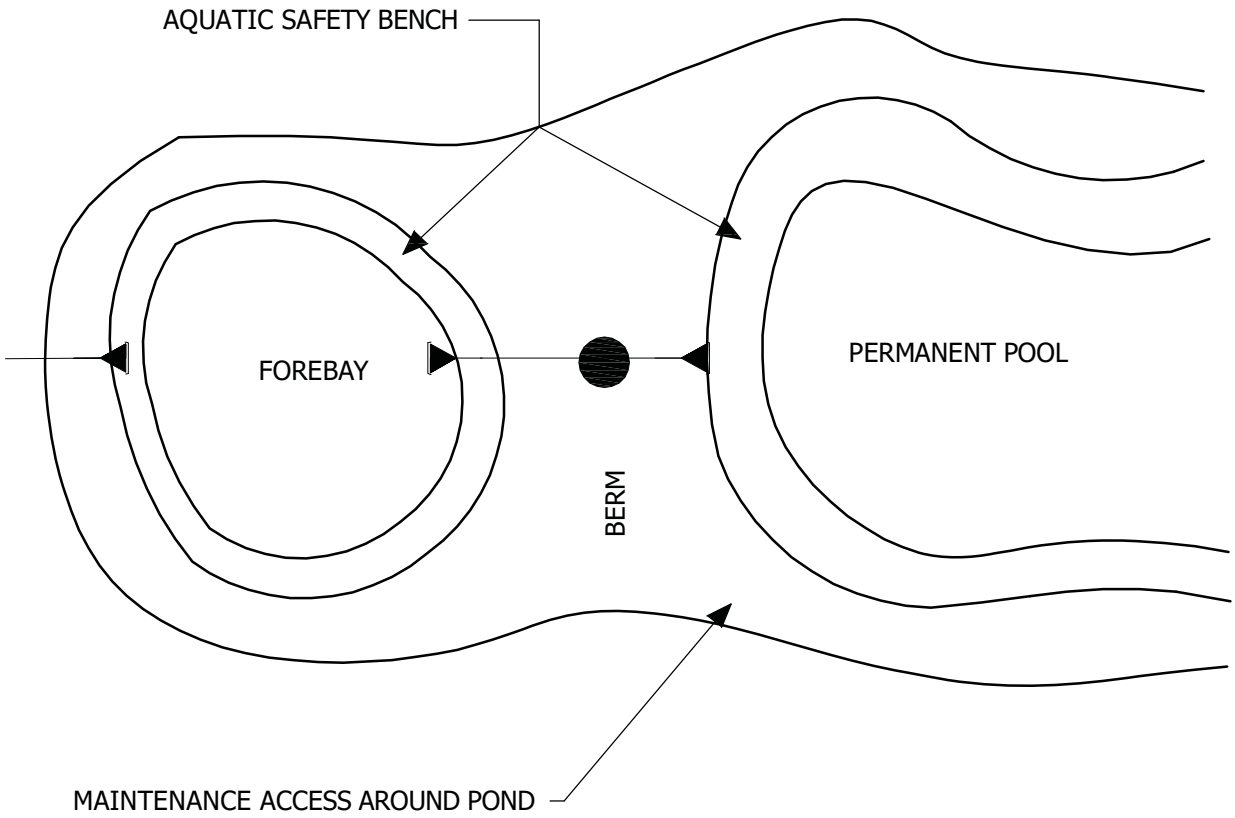

NOTE:
1. PONDS TO INCLUDE FOREBAY AS RECOMMENDED BY CITY
2. SKIMMER STRUCTURE OR RIP-RAP OVERFLOW TO BE APPROVED BY CITY

CITY OF MEDINA

EXTENDED DETENTION PONDS

LAST REVISION: JAN 2016

PLATE NO. ERO-24

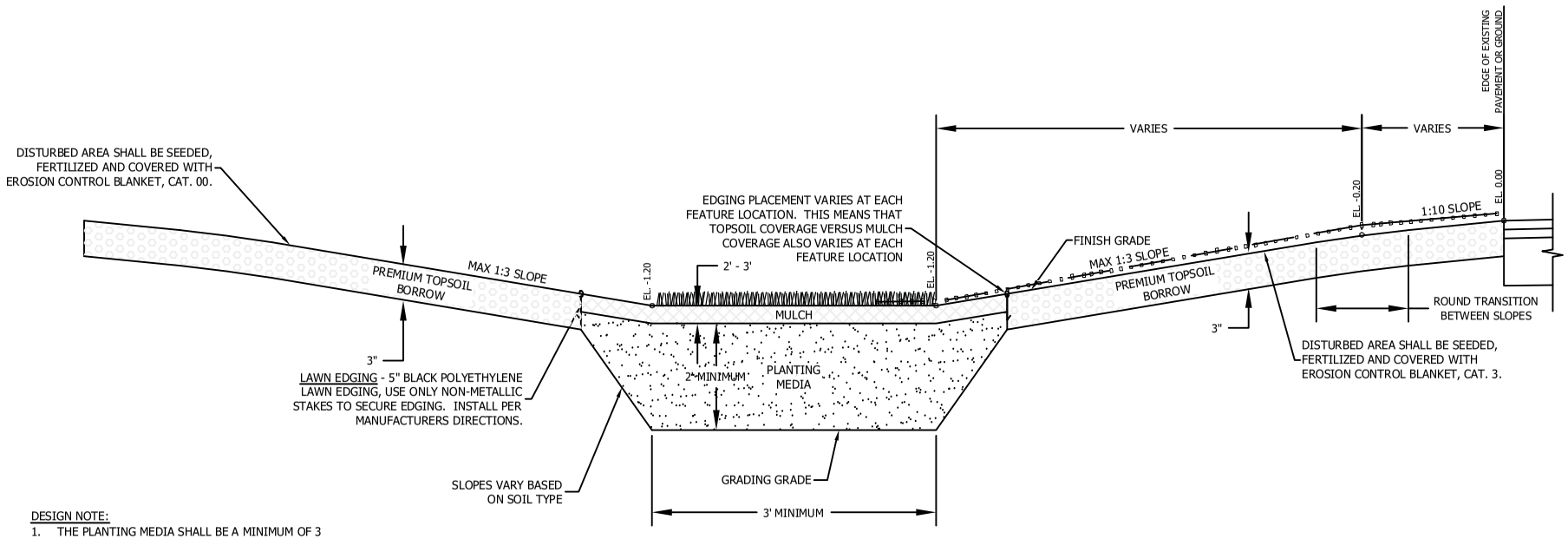

DESIGN NOTE:

1. THE PLANTING MEDIA SHALL BE A MINIMUM OF 3 FEET IN DEPTH TO PROVIDE AN ADEQUATE AMOUNT OF DRAINAGE MATERIAL AND SOIL AMENDMENTS TO ENSURE THE RAIN GARDEN FUNCTIONS PROPERLY. THE BOTTOM OF THE FEATURE SHOULD BE RIPPED TO A DEPTH OF 15 INCHES
2. THE INSTALLATION OF A RAIN GARDEN WITHOUT DRAIN TILE SHALL ONLY BE CONSIDERED ON SITES WITH SANDY SOILS AND AS APPROVED BY CITY ENGINEER.
3. THE CONTRIBUTING DRAINAGE AREA SHALL NOT EXCEED 0.5 ACRES OF IMPERVIOUS SURFACE.
4. A DRAWDOWN TEST WILL BE REQUIRED TO DETERMINE IF A DRAINTILE WILL BE NECESSARY. THE DRAWDOWN TEST WILL INCLUDE EXCAVATING A TEST HOLE THAT IS 1.5 FEET DEEP AND A MINIMUM 2' IN DIAMETER, FILLING IT WITH WATER, AND TIMING THE DRAWDOWN TO VERIFY THAT IT OCCURS WITHIN 48 HOURS OR LESS.
5. IF DRAINTILE IS NECESSARY IT WILL NEED TO OUTLET TO STORM SEWER OR AN OVERLAND DRAINAGE SWALE.
6. THE EMERGENCY OVERFLOW SHALL BE A MAXIMUM OF 1.5 FEET ABOVE THE BOTTOM OF THE PROPOSED RAINGARDEN.

PLANTING MEDIA
THIS MEDIA SHALL BE CONSTRUCTED AS FOLLOWS BASED ON VOLUME:

70% CLEAN SAND, FREE OF DELETERIOUS MATERIAL MN/DOT 3127.2B FA-1
30% ORGANIC LEAF COMPOST MN/DOT 3890.B GRADE 2

MULCH
DOUBLE SHREDDED HARDWOOD MULCH MEETING THE REQUIREMENTS OF MN/DOT 3882.2 TYPE 6

PREMIUM TOPSOIL BORROW
MEETING THE REQUIREMENTS OF MN/DOT 3877.2C

PROVIDE A 6" MULCH BUFFER ZONE FROM THE LAWN EDGING INWARD. KEEP THIS AREA FREE FROM PLANTINGS (INCLUDING PLANTS AT MATURE SIZE).

APPROPRIATE STABILIZATION MEASURES SHALL BE PROVIDED AT THE CURB CUT. THIS MAY INCLUDE SOD, TURF REINFORCEMENT MAT, ETC.

TYPICAL RAIN GARDEN SECTION
NOT TO SCALE

CITY OF MEDINA

TYPICAL RAIN GARDEN DETAIL
TYPICAL SECTION
NO DRAINTILE

LAST REVISION:
JAN 2016

PLATE NO.
RG-01

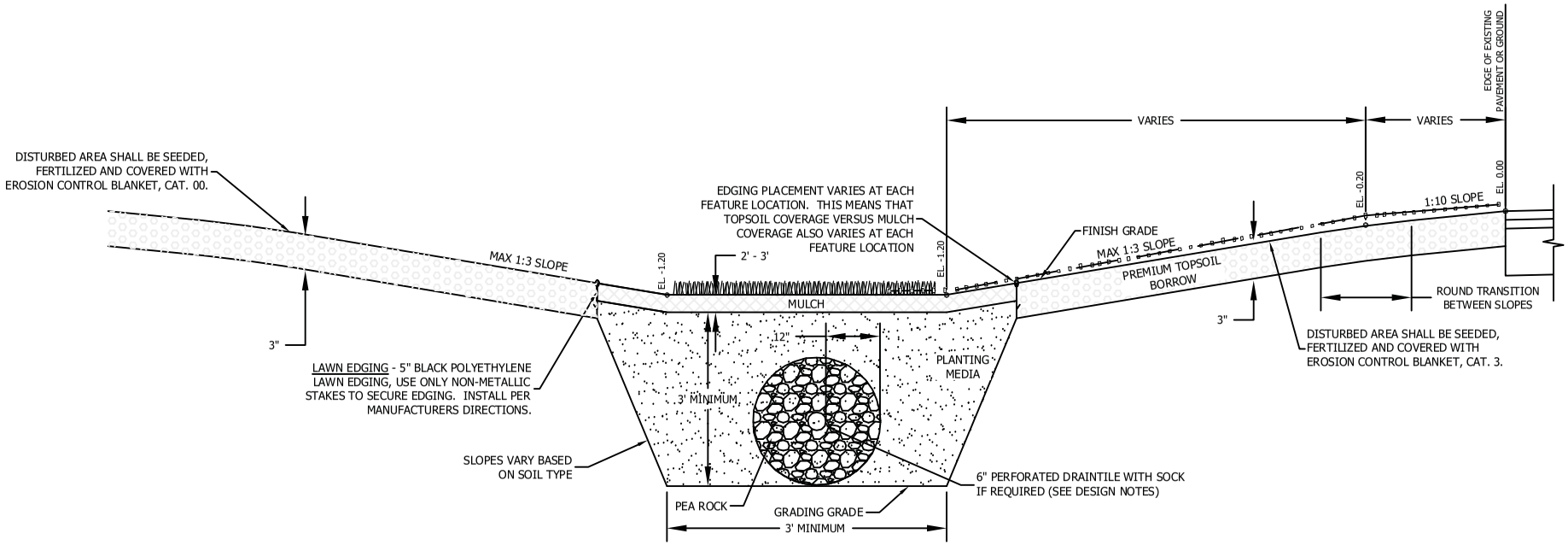

DESIGN NOTES:

1. THE PLANTING MEDIA SHALL BE A MINIMUM OF 3 FEET IN DEPTH TO PROVIDE AN ADEQUATE AMOUNT OF DRAINAGE MATERIAL AND SOIL AMENDMENTS TO ENSURE THE RAIN GARDEN FUNCTIONS PROPERLY. THE BOTTOM OF THE FEATURE SHOULD BE RIPPED TO A DEPTH OF 15 INCHES.
2. THE CONTRIBUTING DRAINAGE AREA SHALL NOT EXCEED 0.5 ACRES OF IMPERVIOUS SURFACE.
3. A DRAWDOWN TEST WILL BE REQUIRED TO DETERMINE IF A DRAINTILE WILL BE NECESSARY. THE DRAWDOWN TEST WILL INCLUDE EXCAVATING A TEST HOLE THAT IS 1.5 FEET DEEP AND A MINIMUM 2 FEET IN DIAMETER, FILLING IT WITH WATER, AND TIMING THE DRAWDOWN TO VERIFY THAT IT OCCURS WITHIN 48 HOURS OR LESS.
4. DRAINTILE WILL NEED TO OUTLET TO STORM SEWER OR AN OVERLAND DRAINAGE SWALE.
5. THE EMERGENCY OVERFLOW SHALL BE A MAXIMUM OF 1.5 FEET ABOVE THE BOTTOM OF THE PROPOSED RAINGARDEN.

PLANTING MEDIA
THIS MEDIA SHALL BE CONSTRUCTED AS FOLLOWS BASED ON VOLUME:

70% CLEAN SAND, FREE OF DELETERIOUS MATERIAL MN/DOT 3127.2B FA-1
30% ORGANIC LEAF COMPOST MN/DOT 3890.B GRADE 2

MULCH
DOUBLE SHREDDED HARDWOOD MULCH MEETING THE REQUIREMENTS OF MN/DOT 3882.2 TYPE 6

PREMIUM TOPSOIL BORROW
MEETING THE REQUIREMENTS OF MN/DOT 3877.2C

PROVIDE A 6" MULCH BUFFER ZONE FROM THE LAWN EDGING INWARD. KEEP THIS AREA FREE FROM PLANTINGS (INCLUDING PLANTS AT MATURE SIZE).

APPROPRIATE STABILIZATION MEASURES SHALL BE PROVIDED AT THE CURB CUT. THIS MAY INCLUDE SOD, TURF REINFORCEMENT MAT, ETC.

TYPICAL RAIN GARDEN SECTION
NOT TO SCALE

CITY OF MEDINA

TYPICAL RAIN GARDEN DETAIL
TYPICAL SECTION
WITH DRAINTILE

LAST REVISION:
JAN 2016

PLATE NO.
RG-02

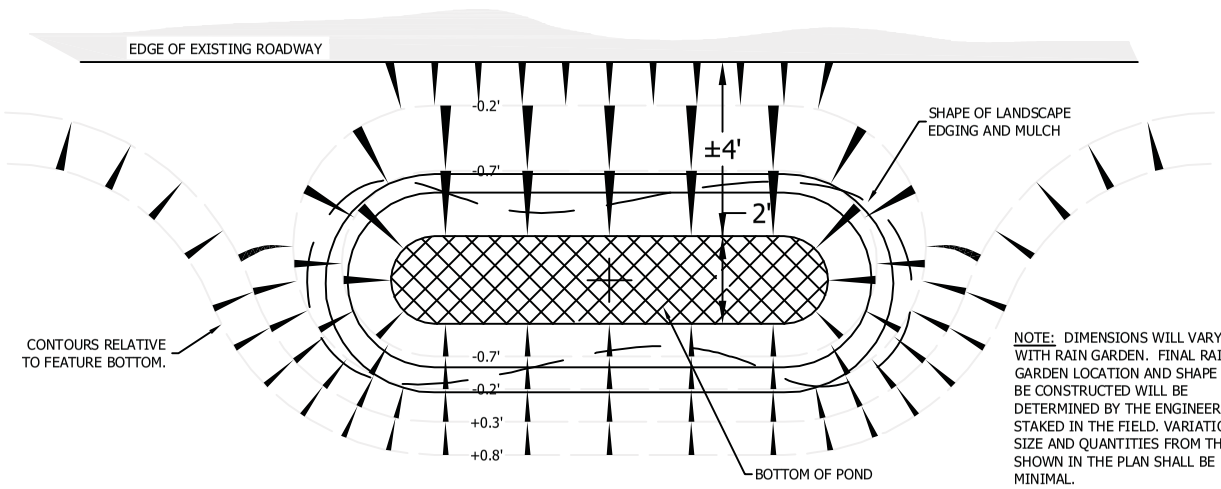

NOTE: DIMENSIONS WILL VARY WITH RAIN GARDEN. FINAL RAIN GARDEN LOCATION AND SHAPE TO BE CONSTRUCTED WILL BE DETERMINED BY THE ENGINEER AND STAKED IN THE FIELD. VARIATION IN SIZE AND QUANTITIES FROM THAT SHOWN IN THE PLAN SHALL BE MINIMAL.

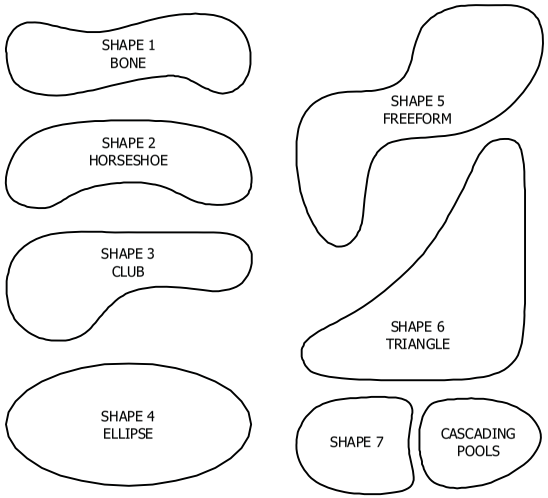

TYPICAL RAIN GARDEN

NOT TO SCALE

CITY OF MEDINA

TYPICAL RAIN GARDEN DETAIL

LAST REVISION:
JAN 2016

PLATE NO.
RG-03

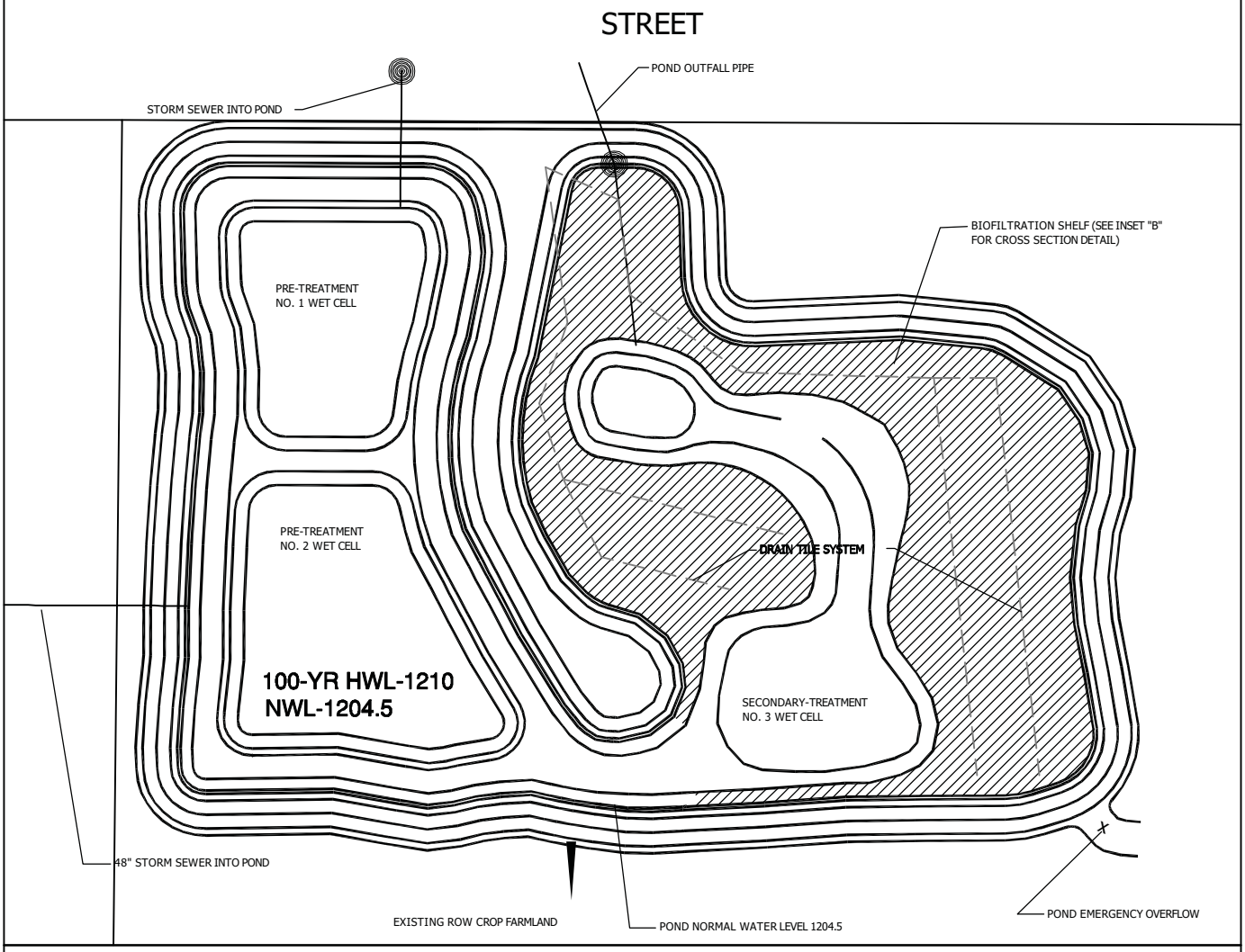

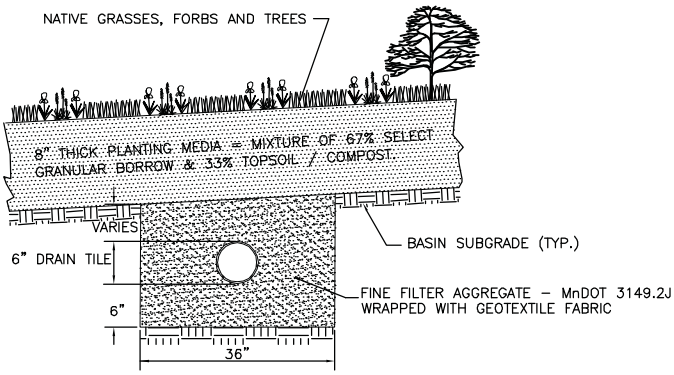

BIO-SHELF INSET "B"

NOT TO SCALE

LEGEND

- PROPOSED WET POND CONTOURS
- PROPOSED BASIN CONTOURS ABOVE NWL
- PROPOSED STORM SEWER IMPROVEMENTS
- PROPOSED STORM SEWER MANHOLE
- BIOFILTRATION SHELF

CITY OF MEDINA

BIOFILTRATION SHELF DETAIL

LAST REVISION: JAN 2016

PLATE NO. RG-04

APPENDIX H
Wetland Data

Wetland ID Number	Section	Management Class	Restoration Potential	Stormwater Susceptibility	Watershed	Subwatershed	Downstream Waterbody	Acres
27-118-23-01-003-	03	M3	Moderate	Moderate	Elm Creek	Elm-8	Elm Creek	3.58
27-118-23-01-015-	15	M2	Moderate	Moderate	Elm Creek	Elm-1	Elm Creek	0.32
27-118-23-01-027-	27	M2	Moderate	Exceptional	Elm Creek	Elm-6	Elm Creek	0.67
27-118-23-02-017-	17	M3	Moderate	High	Elm Creek	Elm-1	Elm Creek	0.25
27-118-23-02-019-	19	M3	Moderate	High	Elm Creek	Elm-1	Elm Creek	0.73
27-118-23-02-027-	27	M1	Low	Moderate	Elm Creek	Elm-1	Elm Creek	47.52
27-118-23-03-004-	04	P	Moderate	Exceptional	Elm Creek	Elm-9		0.25
27-118-23-03-005-	05	M1	Low	Moderate	Elm Creek	Elm-10		8.11
27-118-23-03-006-	06	M2	Low	Moderate	Elm Creek	Elm-10		0.32
27-118-23-03-008-	08	M3	Moderate	Moderate	Elm Creek	Elm-10		0.27
27-118-23-03-013-	13	M3	Moderate	High	Elm Creek	Elm-10		0.31
27-118-23-03-014-	14	M3	Moderate	High	Elm Creek	Elm-10		1.82
27-118-23-03-015-	15	M3	Moderate	High	Elm Creek	Elm-10		1.16
27-118-23-03-018-	18	M2	Low	Moderate	Elm Creek	Elm-1a	Elm Creek	0.46
27-118-23-03-021-	21	M3	Moderate	Exceptional	Elm Creek	Elm-10		1.79
27-118-23-03-022-	22	M3	Moderate	Moderate	Elm Creek	Elm-10		0.16
27-118-23-03-027-	27	M3	Moderate	Moderate	Elm Creek	Elm-1	Elm Creek	2.31
27-118-23-03-029-	29	P	Moderate	High	Elm Creek	Elm-10		259.16
27-118-23-03-032-	32	M2	Low	Moderate	Elm Creek	Elm-10		4.61
27-118-23-03-033-	33	M2	Low	Moderate	Elm Creek	Elm-10		1.03
27-118-23-03-035-	35	M2	Moderate	Moderate	Elm Creek	Elm-10		0.77
27-118-23-03-041-	41	M2	Low	Moderate	Elm Creek	Elm-9		46.71
27-118-23-04-007-	07	M2	Moderate	Moderate	Elm Creek	Elm-9		3.54
27-118-23-04-008-	08	M3	Moderate	Moderate	Elm Creek	Elm-9		0.55
27-118-23-04-012-	12	M3	Moderate	Moderate	Elm Creek	Elm-9		4.82
27-118-23-04-016-	16	M1	Moderate	Moderate	Elm Creek	Elm-10		0.15
27-118-23-04-018-	18	M3	Low	Moderate	Elm Creek	Elm-10		0.21
27-118-23-04-027-	27	P	Moderate	Exceptional	Elm Creek	Elm-9		0.62
27-118-23-05-024-	24	M3	Moderate	Exceptional	Pioneer Sarah	PS-5	Peter Lake	0.15
27-118-23-06-003-	03	M3	Moderate	Exceptional	Pioneer Sarah	PS-1	Lake Independence	1.11
27-118-23-06-007-	07	M3	Low	Moderate	Pioneer Sarah	PS-12	Lake Independence	0.22
27-118-23-06-015-	15	M2	Moderate	Moderate	Pioneer Sarah	PS-17	Lake Independence	0.44
27-118-23-06-021-	21	M2	Moderate	Moderate	Pioneer Sarah	PS-17	Lake Independence	1.67
27-118-23-07-015-	15	M2	Moderate	Moderate	Pioneer Sarah	PS-14	Lake Independence	0.23
27-118-23-08-004-	04	M3	Moderate	Moderate	Pioneer Sarah	PS-6	Spurzem Lake	0.47

Wetland ID Number	Section	Management Class	Restoration Potential	Stormwater Susceptibility	Watershed	Subwatershed	Downstream Waterbody	Acres
27-118-23-09-009-	09	M2	Moderate	Moderate	Elm Creek	Elm-10		31.27
27-118-23-09-010-	10	M1	Moderate	Moderate	Elm Creek	Elm-10		3.83
27-118-23-10-003-	03	M3	Moderate	Exceptional	Elm Creek	Elm-10		0.99
27-118-23-10-010-	10	M3	Moderate	Exceptional	Elm Creek	Elm-1a	Elm Creek	0.21
27-118-23-10-013-	13	P	Low	High	Elm Creek	Elm-1a	Elm Creek	73.85
27-118-23-10-014-	14	M2	Moderate	Exceptional	Elm Creek	Elm-1a	Elm Creek	0.22
27-118-23-10-016-	16	M3	Moderate	Exceptional	Elm Creek	Elm-3	Elm Creek	0.44
27-118-23-10-020-	20	M2	Moderate	Exceptional	Elm Creek	Elm-1a	Elm Creek	9.36
27-118-23-10-023-	23	M3	Moderate	Exceptional	Elm Creek	Elm-1a	Elm Creek	0.18
27-118-23-10-024-	24	M3	Moderate	Exceptional	Elm Creek	Elm-1a	Elm Creek	0.13
27-118-23-10-025-	25	M3	Moderate	Exceptional	Pioneer Sarah	Elm-1a	Elm Creek	0.23
27-118-23-10-026-	26	M3	Moderate	Exceptional	Elm Creek	Elm-1a	Elm Creek	0.63
27-118-23-11-001-	01	M3	Low	Moderate	Elm Creek	Elm-1a	Elm Creek	0.78
27-118-23-11-010-	10	M3	Moderate	Moderate	Elm Creek	Elm-1a	Elm Creek	4.13
27-118-23-11-012-	12	M2	Low	Moderate	Elm Creek	Elm-1	Elm Creek	0.56
27-118-23-11-028-	28	M2	Low	Moderate	Elm Creek	Elm-3	Elm Creek	0.59
27-118-23-11-030-	30	M2	Low	Moderate	Elm Creek	Elm-3	Elm Creek	0.52
27-118-23-13-010-	10	M2	Low	Moderate	Elm Creek	Elm-3	Elm Creek	0.15
27-118-23-13-011-	11	M3	Moderate	Moderate	Elm Creek	Elm-3a	Elm Creek	0.34
27-118-23-13-012-	12	P	Moderate	Exceptional	Elm Creek	Elm-3a	Elm Creek	59.64
27-118-23-13-021-	21	M2	Moderate	Moderate	MCWD	LLC-1	Long Lake	31.08
27-118-23-13-023-	23	M2	Moderate	Exceptional	MCWD	LLC-8	Long Lake	0.34
27-118-23-13-029-	29	M2	Low	Moderate	MCWD	LLC-8	Long Lake	0.56
27-118-23-13-038-	38	M2	Moderate	Exceptional	MCWD	LLC-8	Long Lake	1.96
27-118-23-14-018-	18	M1	Low	Moderate	MCWD	LLC-8	Long Lake	1.01
27-118-23-14-024-	24	M1	Low	Moderate	MCWD	LLC-8	Long Lake	13.26
27-118-23-14-034-	34	P	Low	Moderate	MCWD	Elm-3	Elm Creek	274.36
27-118-23-15-004-	04	P	Low	Exceptional	Elm Creek	Elm-3	Elm Creek	127.80
27-118-23-15-010-	10	M2	Low	Moderate	Elm Creek	Elm-3	Elm Creek	0.26
27-118-23-15-011-	11	M2	Low	Moderate	Elm Creek	Elm-3	Elm Creek	0.13
27-118-23-15-012-	12	M3	Moderate	Moderate	Elm Creek	Elm-3	Elm Creek	0.35
27-118-23-15-014-	14	M3	Moderate	Moderate	Elm Creek	Elm-3	Elm Creek	0.27
27-118-23-15-019-	19	M3	Moderate	Moderate	Elm Creek	Elm-3	Elm Creek	0.05
27-118-23-15-021-	21	M3	Moderate	Moderate	Elm Creek	Elm-3	Elm Creek	0.20
27-118-23-15-022-	22	M2	Moderate	Moderate	Elm Creek	Elm-3	Elm Creek	1.24

Wetland ID Number	Section	Management Class	Restoration Potential	Stormwater Susceptibility	Watershed	Subwatershed	Downstream Waterbody	Acres
27-118-23-15-023-	23	M2	Moderate	Moderate	Elm Creek	Elm-3	Elm Creek	5.01
27-118-23-16-001-	01	M2	Moderate	Moderate	Pioneer Sarah	PS-7	Spurzem Lake	3.25
27-118-23-16-004-	04	M2	Moderate	High	MCWD	LLC-1	Long Lake	0.34
27-118-23-16-006-	06	M1	Moderate	Moderate	Pioneer Sarah	LLC-1	Long Lake	1.92
27-118-23-16-012-	12	M3	Moderate	Exceptional	Elm Creek	Elm-3	Elm Creek	0.65
27-118-23-16-013-	13	M3	Moderate	Exceptional	MCWD	LLC-1	Long Lake	1.25
27-118-23-16-022-	22	M3	Moderate	Moderate	MCWD	LLC-2	Long Lake	1.26
27-118-23-16-028-	28	M3	Moderate	Moderate	MCWD	LLC-2	Long Lake	0.54
27-118-23-16-036-	36	M1	Moderate	Moderate	MCWD	LLC-1	Long Lake	0.27
27-118-23-20-004-	04	M1	Moderate	Moderate	MCWD	PC-3	Lake Katrina	7.77
27-118-23-20-006-	06	M1	Moderate	High	MCWD	PC-2	Lake Katrina	35.48
27-118-23-20-007-	07	M3	Moderate	Moderate	MCWD	PC-2	Lake Katrina	2.35
27-118-23-20-010-	10	M3	Moderate	Moderate	MCWD	PC-1	Lake Katrina	0.13
27-118-23-20-014-	14	M3	Moderate	Moderate	MCWD	PC-2	Lake Katrina	0.41
27-118-23-20-033-	33	M3	Moderate	Moderate	MCWD	PC-2	Lake Katrina	0.53
27-118-23-21-005-	05	M3	Moderate	Exceptional	MCWD	PC-1	Lake Katrina	0.51
27-118-23-21-006-	06	M3	Moderate	Exceptional	MCWD	LLC-2	Long Lake	1.36
27-118-23-21-022-	22	M3	Moderate	Exceptional	MCWD	LLC-4	Wolsfeld Woods SNA	0.11
27-118-23-21-024-	24	M2	Moderate	Exceptional	MCWD	LLC-4	Wolsfeld Woods SNA	1.68
27-118-23-22-018-	18	M3	Moderate	Moderate	Elm Creek	Elm-3	Elm Creek	0.20
27-118-23-22-028-	28	M3	Moderate	Exceptional	MCWD	LLC-4	Wolsfeld Woods SNA	0.93
27-118-23-22-031-	31	P	Moderate	Exceptional	MCWD	LLC-6	Wolsfeld Woods SNA	0.86
27-118-23-22-035-	35	M3	Moderate	Exceptional	MCWD	LLC-4	Wolsfeld Woods SNA	0.78
27-118-23-25-040-	40	M3	Moderate	Moderate	MCWD	LLC-22	Long Lake	0.22
27-118-23-27-019-	19	M1	Low	High	MCWD	LLC-6	Wolsfeld Woods SNA	0.26

APPENDIX I
Stormwater Modeling

Drainage Area	Area (ac)	Downstream Drainage Area	Outlet Type / Proposed Length	*Calculated Peak Runoff Rate				Minimum Proposed Regional Stormwater Storage (ac-ft)	Comments
				2-yr	10-yr	100-yr	100-yr snowmelt		
Pioneer-Sarah Creek									
PS-1	123	Independence	30" RCP / 100'	7.1	20.7	*34.5	16.2	21.9	Drains to proposed regional pond that discharges west to Independence.
PS-2	372	PS-12	36" RCP / 1300'	13.5	38.7	*62.1	44.2	64.8	Drains to proposed regional pond.
PS-3	209	PS-4	Road Culvert	0.1	0.8	2.5	*5.9	-	Drains to large wetland that discharges across TH55.
PS-4	245	PS-6	Road Culvert	16.8	21.1	28.7	*35.4	-	Drains to wetland that discharges across Pioneer Trail.
PS-5	650	PS-4	Natural	0.0	0.0	43.7	*89.7	-	Drains to Peter Lake which discharges to wetlands in PS-4.
PS-6	896	PS-7	Road Culvert	1.6	6.8	17.0	*29.5	-	Drains to large wetland that discharges south across Hamel Road to Spurzem Lake.
PS-7	609	PS-8	Channel	6.2	30.0	91.0	98.8	-	Drains to Spurzem Lake which discharges via channel to Half Moon Lake.
PS-8	283	Lake Independence	Creek	8.7	40.9	118.8	*136.2	-	Drains to Half Moon Lake which discharges to Lake Independence via Pioneer Creek.
PS-9	350	Lake Independence	N/A	19.6	93.6	*233.7	212.7	-	Drains directly overland to Lake Independence.
PS-10	405	Lake Independence	Outlet Pipe	1.6	7.7	19.0	*31.6	-	Drains to Ardmore Lake which discharges to Lake Independence.
PS-11	30	Independence	15" RCP / 100'	0.9	4.8	*8.9	4.2	2.2	Drains to proposed regional pond that discharges west to Independence.
PS-12	75	PS-18	36"RCP / 100'	14.0	37.4	*58.1	49.0	29.0	Drains to proposed regional pond that discharges to large wetland in PS-18.
PS-13	78	PS-15	24" RCP / 300'	2.7	13.2	*24.8	10.8	6.3	Drains to proposed regional pond that discharges to landlocked wetland in PS-15.
PS-14	353	PS-6	Road Culvert	6.7	13.8	19.1	*21.3	-	Drains to large wetland that discharges across Tomahawk Trail.
PS-15	97	-	-	-	-	-	-	-	Drains to land locked wetland southwest of Loretto.
PS-16	163	PS-14	30" RCP / 800' Downstream Road Culvert	1.9	7.5	15.9	*16.6	22.0	Drains to proposed regional pond which discharges to wetland north of railroad. This wetland discharges south to wetlands in PS-14.
PS-17	97	Independence	30" RCP / 100'	15.4	25.7	*39.2	37.7	11.9	Drains to proposed regional pond. Includes area in Loretto.
PS-18	123	PS-17	Road Culvert	14.6	23.9	29.7	*30.4	-	Drains via culvert across TH55. Includes area in Loretto.
PS-19	13	Independence	18" RCP / 100'	3.9	8.2	11.7	1.8	2.0	Drains to proposed regional pond.
Elm Creek									
ELM-1a	609	ELM-1	36" RCP / 650'	15.4	47.9	*81.1	72.7	53.8	Drains to proposed regional pond.
ELM-1	945	ELM-2	Creek	23.2	35.4	45.1	*49.2	-	Drains to Medina Lake which discharges to Elm Creek.
ELM-2	120	ELM-3	Creek	67.7	144.4	*246.2	16.8	-	Drains directly to Elm Creek.
ELM-3	2387	ELM-4	Creek	207.7	245.4	*271	252.2	-	Drains directly to Elm Creek.
ELM-3a	204	ELM-3	24" RCP / 400'	5.4	18.2	*30.3	24.8	23.3	Drains to proposed regional pond.
ELM-4	326	ELM-7	Creek	71.0	173.8	*318.5	45.4	-	Drains directly to Elm Creek.
ELM-5	539	ELM-7	Creek	62.0	194.7	*404.8	75.1	-	Drains directly to Elm Creek.
ELM-6	712	ELM-7	Creek	52.3	194.4	*417.6	99.1	-	Drains via series of wetlands to Elm Creek. Contains area in Maple Grove and Plymouth.
ELM-7	1244	Plymouth	Creek	159.0	452.6	*904.6	509.1	-	Drains north east via Elm Creek to Plymouth . Majority of drainage area is in Plymouth.
ELM-8	1070	Maple Grove	Creek	19.2	45.9	81.2	*91.4	-	Drains north east to Maple Grove. Majority of drainage area in in Corcoran.
ELM-9	157	Corcoran	36" RCP / 800'	12.8	38.1	*61.4	21.6	22.1	Drains to proposed pond that discharges north to Corcoran.
ELM-10	1432	Corcoran	Creek	56.0	88.9	*246.7	165.3	-	Drains north to Corcoran. Contains drainage area in Corcoran.

* Identifies the critical storm event

Table IV.Appendix.1-A1
Hydrologic Input Parameters for Painter Creek Watershed

Subwatershed I.D.	Area (ac)	Slope (ft/ft)	Width (ft)	Impervious Depression Storage (in)	Pervious Depression Storage (in)	Existing Conditions				2020
						Saturated Hydraulic Conductivity (in/hr)	Capillary Suction (in)	Initial Soil Moisture Deficit (volume air/ volume voids)	Percent Impervious* (%)	Percent Impervious* (%)
PC-1	449	0.008	2228	0.02	0.05	0.16	7.2	0.016	28	31
PC-2	261	0.006	889	0.03	0.05	0.15	6.8	0.017	21	25
PC-3	151	0.009	717	0.02	0.05	0.19	6.2	0.018	19	19
PC-4	758	0.004	1779	0.04	0.05	0.18	6.7	0.017	36	37
PC-5	157	0.014	1425	0.02	0.05	0.17	6.7	0.017	32	32
PC-6	197	0.006	977	0.03	0.05	0.16	6.8	0.017	57	59
PC-7	155	0.006	581	0.03	0.05	0.18	6.4	0.017	34	38
PC-8	1068	0.005	4948	0.03	0.05	0.19	6.2	0.018	58	58
PC-9	583	0.006	1587	0.03	0.05	0.16	7.4	0.016	48	50
PC-10	64	0.012	494	0.02	0.05	0.15	7.3	0.016	19	21
PC-11	706	0.007	2846	0.03	0.05	0.15	7.0	0.016	36	37
PC-12	56	0.024	762	0.01	0.05	0.20	5.3	0.019	13	17
PC-13	338	0.008	1535	0.02	0.05	0.15	7.0	0.016	30	30
PC-14	100	0.015	810	0.02	0.05	0.14	7.5	0.015	38	40
PC-15	51	0.024	579	0.01	0.05	0.17	6.5	0.017	21	22
PC-16	578	0.005	1655	0.04	0.05	0.17	7.0	0.016	37	39
PC-17	284	0.003	936	0.04	0.05	0.09	8.6	0.013	37	37
PC-18	344	0.005	1228	0.03	0.05	0.09	9.3	0.012	23	23
PC-19	106	0.009	742	0.02	0.05	0.16	6.1	0.018	25	25
PC-20	357	0.003	1110	0.04	0.1	0.17	6.6	0.017	32	33
PC-21	1176	0.006	3415	0.03	0.05	0.16	6.5	0.017	38	39
PC-22	195	0.008	1013	0.02	0.05	0.18	6.0	0.018	44	44
PC-23	31	0.020	416	0.02	0.05	0.17	6.9	0.017	35	35
PC-24	175	0.009	952	0.02	0.05	0.19	6.1	0.018	15	17
PC-25	267	0.007	895	0.03	0.05	0.19	6.2	0.018	26	32

Subwatershed I.D.	Area (ac)	Slope (ft/ft)	Width (ft)	Impervious Depression Storage (in)	Pervious Depression Storage (in)	Existing Conditions				2020
						Saturated Hydraulic Conductivity (in/hr)	Capillary Suction (in)	Initial Soil Moisture Deficit (volume air/ volume voids)	Percent Impervious* (%)	Percent Impervious* (%)
PC-26	47	0.013	356	0.02	0.05	0.19	5.7	0.019	32	34

* Includes open water and saturated wetlands.

Table IV.Appendix.1-A2
Summary of Hydraulic Input Parameters (links) for Painter Creek Watershed

Name	US Node	DS Node	Shape*	Diameter/ Depth* (ft)	Length* (ft)	Upstream Invert Elevation* (ft)	Downstream Invert Elevation (ft)
PC-1xsec1	PC-1	PC-2	Natural	6	3600	988.0	972.2
PC-2xsec2	PC-2	PC-2 FN3	Natural		1500	972.2	971.5
PC-2 PD1	PC-2 FN3	PC-2 FN2	Circular	4	25	971.5	971.2
PC-2 PD1	PC-2 FN3	PC-2 FN2	Natural		12	976.5	976.5
PC-2xsec1	PC-2 FN2	PC-2 FN1	Natural		280	971.2	971.5
PC-2 R201	PC-2 FN1	PC-3	Circular	4	55	971.5	970.8
PC-2 R201	PC-2 FN1	PC-3	Natural		30	977.3	977.3
PC-3xsec3	PC-3	PC-3 FN4	Natural		267	970.8	970.5
PC-3 Bike	PC-3 FN4	PC-3 FN3	Circular	4	16	970.5	970.5
PC-3 Bike	PC-3 FN4	PC-3 FN3	Natural		10	978.0	978.0
PC-3xsec2	PC-3 FN3	PC-3 FN2	Natural		65	970.5	970.8
PC-3 PD1	PC-3 FN2	PC-3 FN1	Circular	4	45	970.8	970.6
PC-3 PD1	PC-3 FN2	PC-3 FN1	Natural		20	981.3	981.3
PC-3xsec1	PC-3 FN1	PC-8	Natural		2222	970.6	960.0
PC-4xsec1	PC-4	PC-8	Natural		300	960.5	960.0
PC-5xsec1	PC-5	PC-8	Natural		300	965.0	962.0
PC-6 US12	PC-6	PC-7	Circular	0.83	64	977.8	977.0

Table IV.Appendix.1-A2
Summary of Hydraulic Input Parameters (links) for Painter Creek Watershed

Name	US Node	DS Node	Shape*	Diameter/ Depth* (ft)	Length* (ft)	Upstream Invert Elevation* (ft)	Downstream Invert Elevation (ft)
PC-6 US12	PC-6	PC-7	Circular	1.25	60	981.7	979.6
PC-6 US12	PC-6	PC-7	Natural		35	983.9	983.9
PC-7xsec1	PC-7	PC-8	Natural		2000	977.0	967.0
PC-8Out (ORIF#1)	PC-8	PC-8 FN5	Rectangular	0.67		958.5	
PC-8Out (WEIR#1)	PC-8	PC-8 FN5	Weir		12	960.7	
PC-8Out (WEIR#2)	PC-8	PC-8 FN5	Weir		24	961.0	
PC-8steel	PC-8 FN5	PC-8 FN4	Trapezoidal	3	12	958.5	959.2
PC-8 Bike	PC-8 FN4	PC-8 FN3	Arch	2.5	48	959.2	958.1
PC-8 Bike	PC-8 FN4	PC-8 FN3	Natural		20	964.0	964.0
PC-8xsec1	PC-8 FN3	PC-8 FN2	Natural		90	958.1	957.4
PC-8 US12	PC-8 FN2	PC-8 FN1	Rectangular	4	63	957.4	957.4
PC-8 US12	PC-8 FN2	PC-8 FN1	Natural		40	990.0	990.0
PC-8 RR	PC-8 FN1	PC-9	Rectangular	8.5	85	957.4	957.4
PC-9 out (ORIF#2.1)	PC-9	PC-9 FN5	Rectangular	0.75		957.0	
PC-9 out (WEIR#3.1)	PC-9	PC-9 FN5	Weir		12	959.1	
PC-9 out (WEIR#4.1)	PC-9	PC-9 FN5	Weir		12	959.7	
PC-9xsec2	PC-9 FN5	PC-9 FN4	Natural		340	956.5	956.1
PC-9 PD2	PC-9 FN4	PC-9 PD	Circular	2	50	956.1	955.6
PC-9 PD2	PC-9 FN4	PC-9 PD	Natural		12.5	964.7	964.7
PC-9 PD1	PC-9 PD	PC-10	Circular	2	50	955.8	955.3
PC-9 PD1	PC-9 PD	PC-10	Natural		12.5	967.4	967.4
PC-10xsec1	PC-10	PC-10 FN1	Natural		1190	955.3	955.1
PC-10 CR6	PC-10 FN1	PC-11 FN3	Natural		24	968.5	968.5
PC-10 CR6	PC-10 FN1	PC-11 FN3	Arch	4.5	150	955.1	954.9
PC-10 CR6	PC-10 FN1	PC-11 FN3	Arch	4.5	150	955.1	954.9
PC-11xsec3	PC-11	PC-11	Natural		1100	954.9	952.0

Table IV.Appendix.1-A2
Summary of Hydraulic Input Parameters (links) for Painter Creek Watershed

Name	US Node	DS Node	Shape*	Diameter/ Depth* (ft)	Length* (ft)	Upstream Invert Elevation* (ft)	Downstream Invert Elevation (ft)
	FN3						
PC-11 CR19	PC-11	PC-12	Rectangular	4	46	945.4	945.4
PC-11 CR19	PC-11	PC-12	Natural		29	953.5	953.5
PC-12xsec4	PC-12	PC-12 FN6	Natural		1704	945.4	944.3
PC-12 CR6	PC-12 FN6	PC-13	Arch	6.4	128	944.3	943.9
PC-12 CR6	PC-12 FN6	PC-13	Natural		25	952.6	952.6
PC-13 CR83	PC-13	PC-14	Arch	7.25	78	941.0	941.1
PC-13 CR83	PC-13	PC-14	Natural		28	948.9	948.9
PC-14xsec2	PC-14	PC-14 FN3	Natural		922	941.1	940.3
PC-14 CR 6	PC-14 FN3	PC-15	Arch	7.25	120	940.3	939.9
PC-14 CR 6	PC-14 FN3	PC-15	Natural		25	954.2	954.2
PC-15xsec1	PC-15	PC-15 FN1	Natural		255	939.9	940.9
PC-15Luce	PC-15 FN1	PC-21	Circular	10	100	940.9	941.3
PC-15Luce	PC-15 FN1	PC-21	Circular	6	71	947.7	947.6
PC-15Luce	PC-15 FN1	PC-21	Natural		33	965.0	965.0
PC-16 CR26	PC-16	CP-21 FN9	Circular	2.3	55	953.9	953.6
PC-16 CR26	PC-16	CP-21 FN9	Natural		28	961.3	961.3
PC-17 CR6	PC-17	PC-21	Rectangular	6	39	989.6	989.2
PC-17 CR6	PC-17	PC-21	Natural		40	997.8	997.8

Table IV.Appendix.1-A2
Summary of Hydraulic Input Parameters (links) for Painter Creek Watershed

Name	US Node	DS Node	Shape*	Diameter/ Depth* (ft)	Length* (ft)	Upstream Invert Elevation* (ft)	Downstream Invert Elevation (ft)
PC-17CR6a	PC-17	PC-17 MH1	Circular	3	70	986.0	983.7
PC-17 CR6b	PC-17 MH1	PC-21	Circular	3.5	25	976.3	976.0
PC-18 CR6	PC-18	PC-19	Circular	2	150	975.8	974.3
PC-18 CR6	PC-18	PC-19	Natural		60	995.9	995.9
PC-19 Luce	PC-19	PC-20 FN2	Circular	6	78	960.6	959.9
PC-19 Luce	PC-19	PC-20 FN2	Circular	6	84	957.3	957.1
PC-19 Luce	PC-19	PC-20 FN2	Natural		33	975.7	975.7
PC-20xsec1	PC-20 FN2	PC-20 FN1	Natural		800	957.1	942.7
PC-20 PD1	PC-20 FN1	PC-20	Natural		35	947.0	947.0
PC-20 Ing1	PC-20 FN1	PC-21	Circular	3.67	58	942.7	941.0
PC-20 Ing2	PC-20	PC-21	Circular	3	58	938.9	939.3
PC-20 Ing2	PC-20	PC-21	Natural		40	944.6	944.6
PC-21xsec7	CP-21 FN9	PC-21 FN8	Natural		2660	953.6	943.0
PC-21xsec6	PC-21 FN8	PC-21	Natural		1200	943.0	938.5
PC-21 CR19	PC-6	PC-13	Circular	1.5	51	979.7	979.6
PC-21 CR19	PC-6	PC-13	Natural		35	985.9	985.9
PC-21 weir (WEIR#5)	PC-21	PC-21 FN4	Weir		12	940.6	
PC-21 weir (WEIR#6)	PC-21	PC-21 FN4	Weir		20	941.1	
PC-21 Sout (WEIR#7)	PC-21	PC-21 MH1	Weir		31.4	935.9	

Table IV.Appendix.1-A2
Summary of Hydraulic Input Parameters (links) for Painter Creek Watershed

Name	US Node	DS Node	Shape*	Diameter/ Depth* (ft)	Length* (ft)	Upstream Invert Elevation* (ft)	Downstream Invert Elevation (ft)
PC-21 SED1	PC-21 MH1	PC-21 MH2	Circular	2	90	927.0	927.0
PC-21 SED2	PC-21 MH2	PC-21 FN4	Arch	3.5	45	935.0	935.0
PC-21xsec2	PC-21 FN4	PC-21 FN3	Natural		515	935.0	934.1
PC-21 PD1	PC-21 FN3	PC-21 FN2	Rectangular	7	42	934.1	934.1
PC-21 PD1	PC-21 FN3	PC-21 FN2	Natural		20	942.1	942.1
PC-21xsec1	PC-21 FN2	PC-21 FN1	Natural		233	934.1	935.3
PC-21 CR26	PC-21 FN1	PC-22 FN3	Rectangular	8	46	935.3	935.4
PC-21 CR26	PC-21 FN1	PC-22 FN3	Natural		27	948.2	948.2
PC-22xsec3	PC-22 FN3	PC-22	Natural		450	935.4	936.1
PC-22 P937 (ORIF#3)	PC-22	PC-22 FN1	Rectangular	1.5		934.4	
PC-22 P937 (WEIR#8)	PC-22	PC-22 FN1	Weir		12	938.4	
PC-22 P937 (WEIR#9)	PC-22	PC-22 FN1	Weir		20	939.5	
PC-22xsec1	PC-22 FN1	PC-23	Natural		400	934.4	934.0
PC-23xsec3	PC-23	PC-23 FN4	Natural		640	934.0	934.8
PC-23 PCDr	PC-23 FN4	PC-24	Circular	1.5	69	934.8	934.3
PC-23 PCDr	PC-23 FN4	PC-24	Arch	5.25	69	936.4	934.5

Table IV.Appendix.1-A2
Summary of Hydraulic Input Parameters (links) for Painter Creek Watershed

Name	US Node	DS Node	Shape*	Diameter/ Depth* (ft)	Length* (ft)	Upstream Invert Elevation* (ft)	Downstream Invert Elevation (ft)
PC-23 PCDr	PC-23 FN4	PC-24	Natural		30	942.8	942.8
PC-24xsec1	PC-24	PC-24 FN1	Natural		2791	934.3	933.3
PC-24 WBRd	PC-24 FN1	PC-26	Arch	5.25	81	933.3	933.7
PC-24 WBRd	PC-24 FN1	PC-26	Natural		27	946.4	946.4
PC-25xsec1	PC-25	PC-26 FN1	Natural		200	935.3	932.0
PC-26xsec1	PC-26	PC-26 FN1	Natural		1919	933.7	926.6
PC-26CR110	PC-26 FN1	CB-DN	Arch	8	113	926.6	926.3
PC-26CR110	PC-26 FN1	CB-DN	Natural		66	944.0	944.0

* Length and crest elevation provided for weirs. Shape, height and invert elevation provided for orifices. For more details refer to XP-SWMM model.

Table IV.Appendix.1-A3
Node Results for Painter Creek Watershed

Node Name	NWL (feet)	HWL (feet)			
		Existing		2020	Snow-melt 100-yr, 10-d (7.2 inches)
		1.5-yr, 24-hr (2.6 inches)	100-yr, 24-hr (6.0 inches)	100-yr, 24-hr (6.0 inches)	
PC-1	988.0	988.6	989.2	989.3	989.2
PC-2	972.2	973.7	975.3	975.3	975.5
PC-2 FN1	971.5	973.6	974.9	975.0	975.1
PC-2 FN2	971.2	973.5	974.9	975.0	975.2
PC-2 FN3	971.5	973.5	975.3	975.3	975.5
PC-3	970.8	973.8	975.4	975.6	974.9
PC-3 FN1	970.6	972.1	972.9	973.0	972.3
PC-3 FN2	970.8	973.2	974.6	974.7	974.6
PC-3 FN3	970.5	973.3	974.6	974.7	974.6
PC-3 FN4	970.5	973.5	975.4	975.6	974.8
PC-4	960.5	961.7	962.7	962.7	962.9
PC-5	965.0	965.5	966.2	966.3	966.0
PC-6	977.8	980.8	982.1	982.2	982.3
PC-7	977.0	978.9	980.3	980.5	978.9
PC-8	959.2	960.6	962.2	962.2	962.9
PC-8 FN1	957.4	960.6	961.8	961.8	962.4
PC-8 FN2	957.4	960.6	961.8	961.8	962.4
PC-8 FN3	958.1	960.6	961.8	961.8	962.4
PC-8 FN4	959.2	960.6	962.2	962.2	962.9
PC-8 FN5	958.5	960.6	962.2	962.2	962.9
PC-9	957.0	960.6	961.8	961.8	962.4

Table IV.Appendix.1-A3
Node Results for Painter Creek Watershed

Node Name	NWL (feet)	HWL (feet)			
		Existing		2020	Snow-melt 100-yr, 10-d (7.2 inches)
		1.5-yr, 24-hr (2.6 inches)	100-yr, 24-hr (6.0 inches)	100-yr, 24-hr (6.0 inches)	
PC-9 FN4	956.1	960.6	961.7	961.8	962.3
PC-9 FN5	956.5	960.6	961.7	961.8	962.4
PC-9 PD	960.0	960.0	960.0	960.1	960.0
PC-10	955.3	957.7	959.2	959.4	958.3
PC-10 FN1	955.1	957.4	958.8	959.0	958.0
PC-11	945.4	949.8	951.5	951.5	950.4
PC-11 FN3	954.9	957.3	958.7	958.8	957.9
PC-12	945.4	949.4	950.5	950.6	949.9
PC-12 FN6	944.3	947.8	949.1	949.1	948.4
PC-13	941.0	945.8	947.9	947.9	947.2
PC-14	941.1	945.6	947.5	947.5	946.9
PC-14 FN3	940.3	945.4	947.4	947.5	946.8
PC-15	939.9	945.3	947.0	947.0	946.5
PC-15 FN1	940.9	945.2	947.0	947.0	946.4
PC-16	953.9	958.6	959.5	959.5	959.3
PC-17	986.0	988.2	991.0	991.0	988.6
PC-17 MH1	976.3	979.1	980.8	980.8	979.5
PC-18	975.8	983.9	992.7	992.8	989.5
PC-19	957.3	960.7	962.5	962.6	960.9
PC-20	938.9	942.5	945.5	945.5	945.1
PC-20 FN1	942.7	946.0	948.1	948.2	946.7
PC-20 FN2	957.1	959.2	960.6	960.7	959.4

Table IV.Appendix.1-A3
Node Results for Painter Creek Watershed

Node Name	NWL (feet)	HWL (feet)			
		Existing		2020	Snow-melt 100-yr, 10-d (7.2 inches)
		1.5-yr, 24-hr (2.6 inches)	100-yr, 24-hr (6.0 inches)	100-yr, 24-hr (6.0 inches)	
PC-21	935.9	941.0	943.1	943.2	943.6
PC-21 FN1	935.3	939.0	941.9	942.0	943.1
PC-21 MH1	935.9	941.0	943.1	943.1	943.6
PC-21 MH2	935.0	939.1	942.1	942.2	943.2
PC-21 FN2	934.1	939.0	941.9	942.0	943.1
PC-21 FN3	934.1	939.0	942.1	942.1	943.2
PC-21 FN4	935.0	939.0	942.1	942.1	943.2
PC-21 FN8	943.0	944.3	944.7	944.7	944.5
CP-21 FN9	953.6	955.1	954.7	954.7	954.7
PC-22	934.4	938.9	941.7	941.7	942.9
PC-22 FN1	934.4	937.8	941.4	941.5	942.7
PC-22 FN3	935.3	939.0	941.8	941.8	942.9
PC-23	934.0	937.8	941.3	941.4	942.6
PC-23 FN4	934.8	937.8	941.2	941.2	942.5
PC-24	934.3	937.8	940.6	940.6	941.4
PC-24 FN1	933.3	935.6	937.9	938.0	939.0
PC-25	935.3	937.6	939.4	939.6	937.8
PC-26	933.7	935.2	936.5	936.7	936.8
PC-26 FN1	926.6	929.5	931.3	931.7	930.5

Table IV.Appendix.1-A4
Summary of Link Results for Painter Creek Watershed

Link or Multi Link Name	Shape	Existing				2020		Snow-melt Event 100-year, 10-day	
		1.5-year, 24-hour		100-year, 24-hour		100-year, 24-hour			
		Q_p (cfs)	Peak Velocity (ft/s)	Q_p (cfs)	Peak Velocity (ft/s)	Q_p (cfs)	Peak Velocity (ft/s)	Q_p (cfs)	Peak Velocity (ft/s)
PC-1xsec1	Natural	8.3	1.3	38.0	1.3	42.2	1.1	40.5	1.2
PC-2xsec2	Natural	24.9	0.5	76.0	0.5	94.1	0.5	47.3	0.5
PC-2 PD1	Circular	19.0	2.5	44.3	3.6	46.7	3.6	44.2	3.6
PC-2 PD1	Natural	0.0	0.0	0.0	0.0	0.0	0.0	0.0	0.0
PC-2xsec1	Natural	19.0	1.0	43.7	1.0	46.8	1.0	44.2	0.9
PC-2 R201	Circular	19.9	2.8	46.1	3.8	49.9	3.9	44.2	3.8
PC-2 R201	Natural	0.0	0.0	0.0	0.0	0.0	0.0	0.0	0.0
PC-3xsec3	Natural	34.8	1.2	108.4	1.1	107.4	1.1	49.7	1.1
PC-3 Bike	Circular	30.9	3.2	69.7	5.5	72.6	5.7	56.1	4.5
PC-3 Bike	Natural	0.0	0.0	0.0	0.0	0.0	0.0	0.0	0.0
PC-3xsec2	Natural	30.7	1.5	68.3	1.5	71.2	1.5	57.4	1.5
PC-3 PD1	Circular	30.6	5.1	68.0	7.1	70.5	7.1	60.5	7.8
PC-3 PD1	Natural	0.0	0.0	0.0	0.0	0.0	0.0	0.0	0.0
PC-3xsec1	Natural	25.8	2.3	65.5	3.0	67.4	3.1	52.3	2.7
PC-4xsec1	Natural	34.9	1.7	141.8	1.6	148.3	1.6	82.0	1.6
PC-5xsec1	Natural	7.5	1.8	45.2	3.5	47.8	3.6	28.4	3.0
PC-6 US12	Circular	0.6	1.2	0.8	1.5	0.8	1.5	0.8	1.5
PC-6 US12	Circular	0.0	0.0	1.5	4.1	1.8	4.3	2.9	4.9
PC-6 US12	Natural	0.0	0.0	0.0	0.0	0.0	0.0	0.0	0.0
PC-7xsec1	Natural	56.8	2.9	162.3	3.2	185.3	3.2	59.4	3.0
PC-8Out (ORIF#1)	Orifice	*	*	*	*	*	*	*	*
PC-8Out (WEIR#1)	Weir	*	*	*	*	*	*	*	*
PC-8Out (WEIR#2)	Weir	*	*	*	*	*	*	*	*
PC-8steel	Trapezoidal	5.3	0.6	24.1	0.7	24.3	0.7	27.4	0.7
PC-8 Bike	Arch	5.3	4.2	24.1	3.5	24.3	3.5	27.4	4.2
PC-8 Bike	Natural	0.0	0.0	0.0	0.0	0.0	0.0	0.0	0.0

Table IV.Appendix.1-A4
Summary of Link Results for Painter Creek Watershed

Link or Multi Link Name	Shape	Existing				2020		Snow-melt Event 100-year, 10-day	
		1.5-year, 24-hour		100-year, 24-hour		100-year, 24-hour			
		Q_p (cfs)	Peak Velocity (ft/s)	Q_p (cfs)	Peak Velocity (ft/s)	Q_p (cfs)	Peak Velocity (ft/s)	Q_p (cfs)	Peak Velocity (ft/s)
PC-8xsec1	Natural	5.3	0.8	24.1	0.5	24.3	0.5	27.3	0.7
PC-8 US12	Rectangular	5.3	1.0	24.1	0.9	24.3	0.9	27.3	1.2
PC-8 US12	Natural	0.0	0.0	0.0	0.0	0.0	0.0	0.0	0.0
PC-8 RR	Rectangular	5.3	0.6	24.1	0.6	24.3	0.6	27.3	0.7
PC-9 out (ORIF#2.1)	Orifice	*	*	*	*	*	*	*	*
PC-9 out (WEIR#3.1)	Weir	*	*	*	*	*	*	*	*
PC-9 out (WEIR#4.1)	Weir	*	*	*	*	*	*	*	*
PC-9xsec2	Natural	26.5	0.9	26.1	0.9	26.2	0.9	27.8	0.9
PC-9 PD2	Circular	22.5	7.1	26.1	8.2	26.2	8.3	27.8	8.7
PC-9 PD2	Natural	0.0	0.0	0.0	0.0	0.0	0.0	0.0	0.0
PC-9 PD1	Circular	22.5	7.0	26.1	8.1	26.2	8.1	27.8	8.6
PC-9 PD1	Natural	0.0	0.0	0.0	0.0	0.0	0.0	0.0	0.0
PC-10xsec1	Natural	31.1	1.1	98.6	1.7	109.0	1.7	49.7	1.1
PC-10 CR6	Natural	0.0	0.0	0.0	0.0	0.0	0.0	0.0	0.0
PC-10 CR6	Arch	15.1	1.5	42.9	2.2	47.4	2.3	24.6	1.5
PC-10 CR6	Arch	15.1	1.5	42.9	2.2	47.4	2.3	24.6	1.5
PC-11xsec3	Natural	30.0	2.4	80.1	3.2	88.6	3.3	49.0	2.8
PC-11 CR19	Rectangular	164.1	3.9	257.4	6.4	260.4	6.5	204.5	4.9
PC-11 CR19	Natural	0.0	0.0	0.0	0.0	0.0	0.0	0.0	0.0
PC-12xsec4	Natural	173.6	2.0	271.9	2.3	274.3	2.3	213.9	2.1
PC-12 CR6	Arch	173.3	6.7	270.4	7.9	272.9	7.9	213.3	7.1
PC-12 CR6	Natural	0.0	0.0	0.0	0.0	0.0	0.0	0.0	0.0
PC-13 CR83	Arch	137.3	2.9	276.0	4.3	277.6	4.3	223.9	3.7
PC-13 CR83	Natural	0.0	0.0	0.0	0.0	0.0	0.0	0.0	0.0

Table IV.Appendix.1-A4
Summary of Link Results for Painter Creek Watershed

Link or Multi Link Name	Shape	Existing				2020		Snow-melt Event 100-year, 10-day	
		1.5-year, 24-hour		100-year, 24-hour		100-year, 24-hour			
		Q_p (cfs)	Peak Velocity (ft/s)	Q_p (cfs)	Peak Velocity (ft/s)	Q_p (cfs)	Peak Velocity (ft/s)	Q_p (cfs)	Peak Velocity (ft/s)
PC-14xsec2	Natural	140.2	1.1	283.3	1.1	284.5	1.1	232.9	1.1
PC-14 CR 6	Arch	137.7	2.6	282.8	4.3	284.0	4.3	232.1	3.6
PC-14 CR 6	Natural	0.0	0.0	0.0	0.0	0.0	0.0	0.0	0.0
PC-15xsec1	Natural	138.3	0.9	284.3	0.9	285.4	0.9	236.6	0.9
PC-15Luce	Circular	138.2	5.8	284.3	7.4	285.4	7.4	236.6	6.9
PC-15Luce	Circular	0.0	0.0	0.0	0.0	0.0	0.0	0.0	0.0
PC-15Luce	Natural	0.0	0.0	0.0	0.0	0.0	0.0	0.0	0.0
PC-16 CR26	Circular	30.4	8.6	30.2	9.4	30.3	9.5	27.1	8.7
PC-16 CR26	Natural	0.0	0.0	0.0	0.0	0.0	0.0	0.0	0.0
PC-17 CR6	Rectangular	0.0	0.0	91.5	11.0	90.8	11.0	0.0	0.0
PC-17 CR6	Natural	0.0	0.0	0.0	0.0	0.0	0.0	0.0	0.0
PC-17CR6a	Circular	50.2	11.1	91.1	14.6	90.9	14.6	61.8	11.6
PC-17 CR6b	Circular	50.3	7.1	91.0	9.9	90.9	9.9	61.8	7.7
PC-18 CR6	Circular	37.8	11.9	56.2	17.4	56.5	17.5	50.2	15.7
PC-18 CR6	Natural	0.0	0.0	0.0	0.0	0.0	0.0	0.0	0.0
PC-19 Luce	Circular	0.1	1.0	31.5	4.8	36.5	4.9	1.1	1.9
PC-19 Luce	Circular	80.2	6.2	165.2	7.6	174.0	7.7	90.3	6.3
PC-19 Luce	Natural	0.0	0.0	0.0	0.0	0.0	0.0	0.0	0.0
PC-20xsec1	Natural	80.7	4.1	199.0	4.3	208.3	4.3	91.2	3.8
PC-20 PD1	Natural	0.0	0.0	87.4	2.2	99.3	2.4	0.0	0.0
PC-20 Ing1	Circular	78.0	8.9	108.9	10.8	109.9	10.8	90.6	9.4
PC-20 Ing2	Circular	32.2	5.6	64.5	9.5	64.6	9.6	54.3	7.5
PC-20 Ing2	Natural	0.0	0.0	188.5	2.0	200.0	2.1	27.1	0.9
PC-21xsec7	Natural	32.0	2.2	33.9	2.2	33.9	2.2	27.1	2.0
PC-21xsec6	Natural	30.4	2.2	31.5	2.2	31.8	2.2	26.7	1.4
PC-21 CR19	Circular	*	*	*	*	*	*	*	*

Table IV.Appendix.1-A4
Summary of Link Results for Painter Creek Watershed

Link or Multi Link Name	Shape	Existing				2020		Snow-melt Event 100-year, 10-day	
		1.5-year, 24-hour		100-year, 24-hour		100-year, 24-hour			
		Q_p (cfs)	Peak Velocity (ft/s)	Q_p (cfs)	Peak Velocity (ft/s)	Q_p (cfs)	Peak Velocity (ft/s)	Q_p (cfs)	Peak Velocity (ft/s)
PC-21 CR19	Natural	*	*	*	*	*	*	*	*
PC-21 weir (WEIR#5)	Weir	*	*	*	*	*	*	*	*
PC-21 weir (WEIR#6)	Weir	*	*	*	*	*	*	*	*
PC-21 Sout (WEIR#7)	Weir	*	*	*	*	*	*	*	*
PC-21 SED1	Circular	32.2	9.9	32.3	9.9	32.4	10.0	28.1	8.6
PC-21 SED2	Arch	32.2	2.3	32.3	2.4	32.4	2.4	28.1	1.9
PC-21xsec2	Natural	38.9	0.4	240.8	0.5	244.1	0.5	290.3	0.4
PC-21 PD1	Rectangular	38.6	0.8	239.1	2.9	242.4	2.9	276.8	3.4
PC-21 PD1	Natural	0.0	0.0	0.0	0.0	0.0	0.0	52.9	1.6
PC-21xsec1	Natural	38.4	0.4	238.3	0.5	242.1	0.5	287.4	0.4
PC-21 CR26	Rectangular	38.3	1.3	237.9	4.0	241.7	4.1	286.7	4.1
PC-21 CR26	Natural	0.0	0.0	0.0	0.0	0.0	0.0	0.0	0.0
PC-22xsec3	Natural	38.3	1.3	236.8	1.9	240.6	1.9	283.3	1.2
PC-22 P937 (ORIF#3)	Orifice	*	*	*	*	*	*	*	*
PC-22 P937 (WEIR#8)	Weir	*	*	*	*	*	*	*	*
PC-22 P937 (WEIR#9)	Weir	*	*	*	*	*	*	*	*
PC-22xsec1	Natural	27.0	0.9	167.2	1.4	169.2	1.4	212.3	1.4
PC-23xsec3	Natural	27.0	0.6	167.2	1.1	169.2	1.1	213.2	1.1
PC-23 PCDr	Circular	5.3	2.9	4.8	2.6	4.8	2.7	6.3	3.5
PC-23 PCDr	Arch	25.5	2.4	162.4	5.1	164.3	5.2	206.9	6.4
PC-23 PCDr	Natural	0.0	0.0	0.0	0.0	0.0	0.0	0.0	0.0

Table IV.Appendix.1-A4
Summary of Link Results for Painter Creek Watershed

Link or Multi Link Name	Shape	Existing				2020		Snow-melt Event 100-year, 10-day	
		1.5-year, 24-hour		100-year, 24-hour		100-year, 24-hour			
		Q_p (cfs)	Peak Velocity (ft/s)	Q_p (cfs)	Peak Velocity (ft/s)	Q_p (cfs)	Peak Velocity (ft/s)	Q_p (cfs)	Peak Velocity (ft/s)
PC-24xsec1	Natural	42.5	1.4	167.1	2.0	169.1	2.1	218.1	2.1
PC-24 WBRd	Arch	39.6	3.3	167.1	6.9	169.1	7.0	218.1	8.2
PC-24 WBRd	Natural	0.0	0.0	0.0	0.0	0.0	0.0	0.0	0.0
PC-25xsec1	Natural	79.3	4.3	250.3	4.4	284.8	4.4	89.2	4.3
PC-26xsec1	Natural	55.5	1.5	173.8	2.7	185.1	2.7	219.4	2.9
PC-26CR110	Arch	122.1	3.8	365.6	7.7	414.0	8.1	246.7	6.4
PC-26CR110	Natural	0.0	0.0	0.0	0.0	0.0	0.0	0.0	0.0

* For weir and/or orifice results see provided XP-SWMM model.
** Channel or pipe equalized with Lake Minnetonka. Discharge controlled at Grays Bay dam.

Table IV.Appendix.1-A5
Additional H/H Modeling Notes for Painter Creek Watershed

Subwatershed I.D.	H/H Modeling Notes
PC-18	Unnamed Wetland , DNR ID 27-924W located in the upper portion of this subwatershed.
PC-26	Lake Minnetonka will influence discharge when lake levels are above about 926.5

Table IV.Appendix.1-E1
Hydrologic Input Parameters for Long Lake Creek Watershed

Subwatershed I.D.	Area (acres)	Slope (ft/ft)	Width (ft)	Impervious Depression Storage (in)	Pervious Depression Storage (in)	Existing Conditions				2020
						Saturated Hydraulic Conductivity (in/hr)	Capillary Suction (in)	Initial Soil Moisture Deficit (volume air/volume voids)	Percent Impervious* (%)	Percent Impervious* (%)
LLC-1	295	0.014	4022	0.03	0.05	0.16	6.7	0.017	51	52
LLC-2	267	0.014	2002	0.03	0.05	0.21	6.1	0.018	33	34
LLC-3	213	0.005	1078	0.04	0.05	0.19	6.2	0.018	19	23
LLC-4	268	0.004	816	0.05	0.05	0.18	6.1	0.018	32	35
LLC-5	174	0.013	1053	0.03	0.05	0.17	6.2	0.018	28	30
LLC-6	376	0.007	1298	0.04	0.05	0.17	6.6	0.017	24	24
LLC-7	199	0.004	620	0.05	0.05	0.15	6.2	0.018	31	34
LLC-8	578	0.003	1553	0.05	0.05	0.18	6.7	0.017	32	34
LLC-9	173	0.006	837	0.04	0.05	0.17	6.7	0.017	29	31
LLC-10	464	0.002	1905	0.07	0.05	0.13	7.6	0.015	35	37
LLC-11	419	0.003	1384	0.05	0.05	0.16	6.6	0.017	33	35
LLC-12	170	0.004	999	0.05	0.05	0.16	6.7	0.017	16	20
LLC-13	108	0.011	733	0.03	0.05	0.22	6.3	0.018	8	10
LLC-14	60	0.001	436	0.09	0.05	0.21	6.9	0.017	4	5
LLC-15	36	0.019	463	0.02	0.05	0.21	6.2	0.018	21	23
LLC-16	78	0.007	432	0.04	0.05	0.20	6.0	0.018	32	35
LLC-17	61	0.006	534	0.04	0.05	0.21	6.4	0.017	15	15
LLC-18	108	0.012	673	0.03	0.05	0.24	5.5	0.019	24	25
LLC-19	141	0.010	855	0.03	0.05	0.19	5.7	0.019	13	16
LLC-20	123	0.001	662	0.08	0.05	0.13	7.7	0.015	40	40
LLC-21	476	0.006	4228	0.04	0.05	0.20	5.7	0.019	42	43

Table IV.Appendix.1-E1
Hydrologic Input Parameters for Long Lake Creek Watershed

Subwatershed I.D.	Area (acres)	Slope (ft/ft)	Width (ft)	Impervious Depression Storage (in)	Pervious Depression Storage (in)	Existing Conditions				2020
						Saturated Hydraulic Conductivity (in/hr)	Capillary Suction (in)	Initial Soil Moisture Deficit (volume air/volume voids)	Percent Impervious* (%)	Percent Impervious* (%)
LLC-22	104	0.005	445	0.04	1.4	0.18	5.7	0.019	20	21
LLC-23	144	0.012	1692	0.03	0.05	0.23	5.6	0.019	34	34
LLC-24	180	0.011	1247	0.03	0.05	0.22	5.7	0.019	25	25
LLC-25	159	0.013	1648	0.03	0.05	0.17	6.8	0.017	32	35
LLC-26	173	0.004	931	0.05	0.05	0.12	8.3	0.014	31	38
LLC-27	31	0.004	253	0.05	0.05	0.10	9.0	0.013	65	77
LLC-28	9	0.000	200	1.26	0.05	0.09	9.4	0.012	24	29
LLC-29	41	0.004	240	0.05	0.05	0.10	9.0	0.013	30	62
LLC-30	29	0.004	199	0.05	0.05	0.07	10.5	0.010	81	87
LLC-31	36	0.011	425	0.03	0.05	0.11	9.0	0.013	24	25
LLC-32	29	0.006	519	0.04	0.05	0.11	10.1	0.011	31	39
LLC-33	11	0.007	205	0.04	0.05	0.07	10.5	0.010	38	38
LLC-34	85	0.006	331	0.04	0.05	0.12	8.1	0.014	33	33
LLC-35	39	0.010	324	0.03	0.05	0.07	9.5	0.012	86	88
LLC-36	24	0.017	316	0.02	0.05	0.17	5.7	0.019	60	61
LLC-37	31	0.011	307	0.03	0.05	0.20	5.7	0.019	35	42
LLC-38	24	0.016	400	0.02	0.05	0.19	5.5	0.019	68	69
LLC-39	48	0.010	359	0.03	0.05	0.16	6.4	0.018	41	41
LLC-40	127	0.005	987	0.04	0.05	0.28	6.1	0.018	21	22
LLC-41	741	0.009	2936	0.03	0.05	0.22	5.9	0.018	54	54
LLC-42	106	0.006	730	0.04	0.05	0.24	5.5	0.019	33	35

Table IV.Appendix.1-E1
Hydrologic Input Parameters for Long Lake Creek Watershed

Subwatershed I.D.	Area (acres)	Slope (ft/ft)	Width (ft)	Impervious Depression Storage (in)	Pervious Depression Storage (in)	Existing Conditions				2020
						Saturated Hydraulic Conductivity (in/hr)	Capillary Suction (in)	Initial Soil Moisture Deficit (volume air/volume voids)	Percent Impervious* (%)	Percent Impervious* (%)
LLC-43	59	0.006	538	0.04	0.05	0.17	6.4	0.017	48	49
LLC-44	88	0.002	721	0.07	0.05	0.23	5.7	0.019	31	31
LLC-45	48	0.010	472	0.03	0.05	0.16	7.4	0.016	21	23
LLC-46	141	0.008	880	0.03	0.05	0.22	6.3	0.018	38	36
LLC-47	170	0.005	839	0.04	0.05	0.15	7.7	0.015	47	42
LLC-48	170	0.010	741	0.03	0.05	0.14	7.8	0.015	34	35
LLC-49	59	0.012	644	0.03	0.05	0.24	5.9	0.018	30	32
LLC-50	158	0.008	829	0.03	0.05	0.16	6.8	0.017	50	50
LLC-51	130	0.003	602	0.05	0.05	0.21	6.4	0.018	47	47
LLC-52	142	0.009	1718	0.03	0.05	0.19	6.1	0.018	67	67
LLC-53	94	0.006	1281	0.04	0.05	0.20	6.3	0.018	63	64

* Includes open water and saturated wetlands.

Table IV.Appendix.1-E2
Summary of Hydraulic Input Parameters (links) for Long Lake Creek Watershed

Name	US Node	DS Node	Shape*	Diameter/ Depth* (ft)	Length* (ft)	Upstream Invert Elevation* (ft)	Downstream Invert Elevation (ft)
LLC-1 pd	LLC-1pond	LLC-1 FN1	Circular	2	40	996.7	997.1
LLC-1 pd	LLC-1pond	LLC-1 FN1	Natural		20	1002.2	1002.2
LLC-1nat1	LLC-1	LLC-1pond	Natural		250	998.0	996.7
LLC-1nat2	LLC-1 FN1	LLC-2	Natural		2200	997.1	982.8
LLC-2 pd	LLC-2	LLC-2 FN1	Circular	3	50	982.9	982.6
LLC-2 pd	LLC-2	LLC-2 FN1	Natural		30	990.0	990.0
LLC-2cr24	LLC-2 FN1	LLC-4	Circular	3	200	986.0	980.3
LLC-2cr24	LLC-2 FN1	LLC-4	Natural		60	989.0	989.0
LLC-3cr24	LLC-3	LLC-4	Circular	2	92	973.4	972.6
LLC-3cr24	LLC-3	LLC-4	Natural		60	983.0	983.0
LLC-4 pd	LLC-4	LLC-4 FN1	Circular	3	12	962.2	962.4
LLC-4 pd	LLC-4	LLC-4 FN1	Natural		6	965.1	965.1
LLC-4nat	LLC-4 FN1	LLC-6	Natural		1500	963.0	957.0
LLC-5 tr	LLC-5	LLC-6	Circular	1	15	960.5	960.4
LLC-5 tr	LLC-5	LLC-6	Natural		6	960.9	960.9
LLC-6 tr	LLC-6	LLC-6 FN1	Circular	3	18	957.8	957.6
LLC-6 tr	LLC-6	LLC-6 FN1	Natural		10	959.5	959.5
LLC-6nat	LLC-6 FN1	LLC-14	Natural		3200	957.6	952.0
LLC-7 Tdr	LLC-7	LLC-8	Circular	2	80	978.5	978.0
LLC-7 Tdr	LLC-7	LLC-8	Natural		60	985.0	985.0
LLC-8cr24	LLC-8	LLC-9	Circular	3	88	972.9	972.9
LLC-8cr24	LLC-8	LLC-9	Natural		60	981.5	981.5
LLC-9 pd	LLC-9	LLC-9 FN1	Circular	4	47	971.2	970.8
LLC-9 pd	LLC-9	LLC-9 FN1	Natural		30	975.5	975.5
LLC-9DhRd	LLC-9 FN2	LLC-12	Circular	3	60	968.5	968.2
LLC-9DhRd	LLC-9 FN2	LLC-12	Natural		35	978.6	978.6
LLC-9nat	LLC-9 FN1	LLC-9 FN2	Natural		1800	970.8	968.5
LLC-10cr24	LLC-10	LLC-11	Circular	2	84	994.7	993.9

Table IV.Appendix.1-E2
Summary of Hydraulic Input Parameters (links) for Long Lake Creek Watershed

Name	US Node	DS Node	Shape*	Diameter/ Depth* (ft)	Length* (ft)	Upstream Invert Elevation* (ft)	Downstream Invert Elevation (ft)
LLC-11 Mtr	LLC-11	LLC-11 FN1	Circular	2	250	987.0	984.4
LLC-11 Mtr	LLC-11	LLC-11 FN1	Natural		35	989.2	989.2
LLC-11nat	LLC-11 FN1	LLC-9	Natural		1500	984.4	975.0
LLC-12weir (Deer Hill Wetland)	LLC-12	LLC-13	Weir		20	966.0	
LLC-13nat	LLC-13	LLC-14	Natural		4000	966.0	952.0
LLC-14 cr6	LLC-14	LLC-15	Circular	4	108	952.0	950.0
LLC-15weir (LLC-15 orifice1)	LLC-15	LLC-16	Rectangular	1		949.0	
LLC-15weir (LLC-15 orifice2)	LLC-15	LLC-16	Rectangular	1		949.0	
LLC-15weir (LLC-15 orifice3)	LLC-15	LLC-16	Rectangular	1		949.0	
LLC-15weir (LLC-15 orifice4)	LLC-15	LLC-16	Rectangular	1		949.0	
LLC-15weir (LLC-15 orifice5)	LLC-15	LLC-16	Rectangular	1		949.0	
LLC-15weir (LLC-15weir.1)	LLC-15	LLC-16	Weir		30	950.6	
LLC-16 pd	LLC-16	LLC-41	Circular	4	40	944.3	942.6
LLC-16 pd	LLC-16	LLC-41	Natural		20	949.0	949.0
LLC-17 cr6	LLC-17	LLC-41	Circular	3	87	971.6	971.1
LLC-17 cr6	LLC-17	LLC-41	Rectangular	8	120	974.5	974.0
LLC-18 cr6	LLC-18	LLC-41	Circular	4	110	967.8	967.3
LLC-18nat	LLC-18	LLC-17	Natural		15	984.5	984.5
LLC-19 cr6	LLC-19	LLC-24	Circular	4.5	130	977.8	975.9
LLC-19 cr6	LLC-19	LLC-24	Natural		40	993.9	993.9
LLC-20 26	LLC-20mh1	LLC-21	Circular	2.25	177	990.8	990.0

Table IV.Appendix.1-E2
Summary of Hydraulic Input Parameters (links) for Long Lake Creek Watershed

Name	US Node	DS Node	Shape*	Diameter/ Depth* (ft)	Length* (ft)	Upstream Invert Elevation* (ft)	Downstream Invert Elevation (ft)
LLC-20 27	LLC-20	LLC-20mh1	Circular	1.75	719	994.1	991.3
LLC-21 pd	LLC-21	LLC-22	Natural		15	996.9	996.9
LLC-22nat	LLC-22	LLC-22 FN1	Natural		100	993.0	993.0
LLC-22 Hdr	LLC-22 FN1	LLC-23	Circular	1.25	75	986.2	982.2
LLC-22 Hdr	LLC-22 FN1	LLC-23	Natural		30	990.0	990.0
LLC-23nat1	LLC-23	LLC-24	Natural		100	979.0	979.0
LLC-24Lkrd	LLC-24	LLC-41	Rectangular	5	32	943.4	943.0
LLC-24Lkrd	LLC-24	LLC-41	Natural		30	947.0	947.0
LLC-25BRd1	LLC-25 FN1	LLC-25mh1	Circular	1	90	981.3	980.8
LLC-25BRd2	LLC-25mh1	LLC-41	Circular	2	160	980.5	976.7
LLC-25nat	LLC-25	LLC-25 FN1	Natural		500	984.5	981.3
LLC-26out	LLC-26	LLC-26pond	Circular	1.5	44	1010.3	1010.0
LLC-26us12	LLC-26pond	LLC-27 FN1	Circular	2	122	1008.2	1006.8
LLC-27weir (WEIR#4.2)	LLC-27	LLC-28 FN1	Weir		6	1004.7	
LLC-27nat	LLC-27 FN1	LLC-27	Trapezoidal	1.5	689	1006.8	1002.6
LLC-28 WDr	LLC-28	LLC-30 FN1	Circular	3	97	1000.3	999.1
LLC-28nat	LLC-28 FN1	LLC-28	Natural	3.25	885	1002.3	1000.3
LLC-29nat	LLC-29	LLC-30 FN2	Natural	6	1181	999.6	995.7
LLC-30 pd	LLC-30	LLC-35	Circular	4	98	976.1	972.1
LLC-30nat1	LLC-30 FN1	LLC-30 FN2	Trapezoidal	4.3	38	999.1	995.7
LLC-30nat2	LLC-30 FN2	LLC-30	Natural	4.3	1722	995.7	976.1
LLC-31 WDr	LLC-31	LLC-32	Circular	2	68	996.6	996.0
LLC-32 HDr	LLC-32	LLC-33	Circular	2.5	119	984.6	984.0
LLC-33 pd	LLC-33	LLC-34	Circular	2	107	981.7	980.8
LLC-34 RR	LLC-34	LLC-35	Circular	4	91	972.5	972.0
LLC-35 DSt	LLC-35	LLC-36	Circular	3	131	960.4	958.8
LLC-36us12	LLC-36	LLC-38 FN1	Circular	6	100	951.7	951.4

Table IV.Appendix.1-E2
Summary of Hydraulic Input Parameters (links) for Long Lake Creek Watershed

Name	US Node	DS Node	Shape*	Diameter/ Depth* (ft)	Length* (ft)	Upstream Invert Elevation* (ft)	Downstream Invert Elevation (ft)
LLC-37orf (ORIF#2.2)	LLC-37	LLC-37 FN1	Circular	0		972.0	
LLC-37orf (WEIR#3.2)	LLC-37	LLC-37 FN1	Weir		24	976.5	
LLC-37 BRd	LLC-37 FN1	LLC-38 FN1	Circular	4	868	968.0	951.5
LLC-38nat	LLC-38 FN1	LLC-38	Natural	7	1000	951.4	945.0
LLC-38orf (LLC-38 orifice)	LLC-38	LLC-38 mh1	Circular	0		945.5	
LLC-38pipe	LLC-38 mh1	LLC-38s	Circular	3	200	941.5	940.6
LLC-38weir	LLC-38s	LLC-41	Trapezoidal	2	130	944.5	944.0
LLC-39us12	LLC-39	LLC-41	Circular	2.25	436	944.9	944.3
LLC-40 pd	LLC-40	LLC-41	Circular	1.75	23	954.2	954.2
LLC-40 pd	LLC-40	LLC-41	Natural		15	959.0	959.0
LLC-41 R&R	LLC-41 FN8	LLC-43	Circular	5.5	170	939.2	938.8
LLC-41nat1	LLC-41 FN1	LLC-41 FN2	Natural		120	943.1	942.5
LLC-41nat2	LLC-41 FN3	LLC-41 FN4	Natural		76	942.2	941.9
LLC-41nat3	LLC-41 FN4	LLC-41 FN5	Natural		239	941.9	940.8
LLC-41nat4	LLC-41 FN5	LLC-41 FN6	Natural		150	940.8	940.1
LLC-41nat5	LLC-41 FN6	LLC-41 FN7	Natural		19	940.1	939.2
LLC-41nat6	LLC-41 FN7	LLC-41 FN8	Natural		1	939.2	939.2
LLC-41out	LLC-41	LLC-41 FN1	Rectangular	6	39	944.3	943.1
LLC-41us12	LLC-41 FN2	LLC-41 FN3	Rectangular	6	54	942.5	942.0
LLC-42nat	LLC-42	LLC-41 FN8	Natural		50	953.9	953.9
LLC-43nat1	LLC-43	LLC-43FN1	Natural		30	938.8	939.3
LLC-43nat2	LLC-43FN1	LLC-43 FN2	Natural		555	939.3	939.1
LLC-43nat3	LLC-43 FN2	LLC-43 FN3	Natural		495	939.1	937.4
LLC-43nat4	LLC-43 FN3	LLC-43 FN4	Natural		41	937.4	937.3
LLC-43nat5	LLC-43 FN4	LLC-43 FN5	Natural		1	937.3	937.3
LLC-43ord	LLC-43 FN5	LLC-47 FN1	Circular	4	58	937.3	937.6

Table IV.Appendix.1-E2
Summary of Hydraulic Input Parameters (links) for Long Lake Creek Watershed

Name	US Node	DS Node	Shape*	Diameter/ Depth* (ft)	Length* (ft)	Upstream Invert Elevation* (ft)	Downstream Invert Elevation (ft)
LLC-43ord	LLC-43 FN5	LLC-47 FN1	Circular	4	55	938.3	938.6
LLC-44ord	LLC-44	LLC-45	Circular	1.25	225	954.0	947.9
LLC-44ord	LLC-44	LLC-45	Natural		50	963.0	963.0
LLC-45ordC	LLC-45	LLC-45 mh1	Circular	2	50	940.1	939.0
LLC-45ordO (LLC-45ord Orifice)	LLC-45 mh1	LLC-47	Rectangular	2		941.5	
LLC-45ordT	LLC-45	LLC-47	Natural		30	947.0	947.0
LLC-46Luce	LLC-46	LLC-47	Circular	2	61	937.5	937.5
LLC-46Luce	LLC-46	LLC-47	Circular	1	60	937.5	937.4
LLC-47BrRd	LLC-47	LLC-50	Circular	5	228	933.5	931.7
LLC-47nat1	LLC-47 FN1	LLC-47 FN2	Natural		30	937.6	938.8
LLC-47nat2	LLC-47 FN2	LLC-47 FN3	Natural		350	938.8	938.3
LLC-47nat3	LLC-47 FN3	LLC-47	Natural		400	938.3	936.0
LLC-48Luce	LLC-48	LLC-50	Circular	2.5	70	930.5	930.5
LLC-49BrRd	LLC-49	LLC-50	Circular	1	50	931.6	931.4
LLC-49FRd	LLC-49	LLC-52	Natural		30	933.0	933.0
LLC-50FSt	LLC-50	LLC-52	Rectangular	4.5	50	927.3	927.3
LLC-51BrRd	LLC-51	LLC-52	Circular	3.5	60	931.5	931.9
LLC-52 R&R	LLC-52	LLC-53	Trapezoidal	6	50.0	927.0	927.0
LLC-53cr15	LLC-53	LM-all	Trapezoidal	18	40.0	921.4	921.4

* Length and crest elevation provided for weirs. Shape, height and invert elevation provided for orifices. For more details refer to XP-SWMM model.

Table IV.Appendix.1-E2
Summary of Hydraulic Input Parameters (links) for Long Lake Creek Watershed

Name	US Node	DS Node	Shape*	Diameter/ Depth* (ft)	Length* (ft)	Upstream Invert Elevation* (ft)	Downstream Invert Elevation (ft)
LLC-1 pd	LLC-1pond	LLC-1 FN1	Circular	2	40	996.7	997.1
LLC-1 pd	LLC-1pond	LLC-1 FN1	Natural		20	1002.2	1002.2
LLC-1nat1	LLC-1	LLC-1pond	Natural		250	998.0	996.7
LLC-1nat2	LLC-1 FN1	LLC-2	Natural		2200	997.1	982.8
LLC-2 pd	LLC-2	LLC-2 FN1	Circular	3	50	982.9	982.6
LLC-2 pd	LLC-2	LLC-2 FN1	Natural		30	990.0	990.0
LLC-2cr24	LLC-2 FN1	LLC-4	Circular	3	200	986.0	980.3
LLC-2cr24	LLC-2 FN1	LLC-4	Natural		60	989.0	989.0
LLC-3cr24	LLC-3	LLC-4	Circular	2	92	973.4	972.6
LLC-3cr24	LLC-3	LLC-4	Natural		60	983.0	983.0
LLC-4 pd	LLC-4	LLC-4 FN1	Circular	3	12	962.2	962.4
LLC-4 pd	LLC-4	LLC-4 FN1	Natural		6	965.1	965.1
LLC-4nat	LLC-4 FN1	LLC-6	Natural		1500	963.0	957.0
LLC-5 tr	LLC-5	LLC-6	Circular	1	15	960.5	960.4
LLC-5 tr	LLC-5	LLC-6	Natural		6	960.9	960.9
LLC-6 tr	LLC-6	LLC-6 FN1	Circular	3	18	957.8	957.6
LLC-6 tr	LLC-6	LLC-6 FN1	Natural		10	959.5	959.5
LLC-6nat	LLC-6 FN1	LLC-14	Natural		3200	957.6	952.0
LLC-7 Tdr	LLC-7	LLC-8	Circular	2	80	978.5	978.0
LLC-7 Tdr	LLC-7	LLC-8	Natural		60	985.0	985.0
LLC-8cr24	LLC-8	LLC-9	Circular	3	88	972.9	972.9
LLC-8cr24	LLC-8	LLC-9	Natural		60	981.5	981.5
LLC-9 pd	LLC-9	LLC-9 FN1	Circular	4	47	971.2	970.8
LLC-9 pd	LLC-9	LLC-9 FN1	Natural		30	975.5	975.5

Table IV.Appendix.1-E2
Summary of Hydraulic Input Parameters (links) for Long Lake Creek Watershed

Name	US Node	DS Node	Shape*	Diameter/ Depth* (ft)	Length* (ft)	Upstream Invert Elevation* (ft)	Downstream Invert Elevation (ft)
LLC-9DhRd	LLC-9 FN2	LLC-12	Circular	3	60	968.5	968.2
LLC-9DhRd	LLC-9 FN2	LLC-12	Natural		35	978.6	978.6
LLC-9nat	LLC-9 FN1	LLC-9 FN2	Natural		1800	970.8	968.5
LLC-10cr24	LLC-10	LLC-11	Circular	2	84	994.7	993.9
LLC-11 Mtr	LLC-11	LLC-11 FN1	Circular	2	250	987.0	984.4
LLC-11 Mtr	LLC-11	LLC-11 FN1	Natural		35	989.2	989.2
LLC-11nat	LLC-11 FN1	LLC-9	Natural		1500	984.4	975.0
LLC-13nat	LLC-13	LLC-14	Natural		4000	966.0	952.0
LLC-14 cr6	LLC-14	LLC-15	Circular	4	108	952.0	950.0
LLC-15 orifice1			Rectangular	1		949.0	
LLC-15 orifice2			Rectangular	1		949.0	
LLC-15 orifice3			Rectangular	1		949.0	
LLC-15 orifice4			Rectangular	1		949.0	
LLC-15 orifice5			Rectangular	1		949.0	
LLC-15weir.1					30	950.6	
LLC-16 pd	LLC-16	LLC-41	Circular	4	40	944.3	942.6
LLC-16 pd	LLC-16	LLC-41	Natural		20	949.0	949.0
LLC-17 cr6	LLC-17	LLC-41	Circular	3	87	971.6	971.1
LLC-17 cr6	LLC-17	LLC-41	Rectangular	8	120	974.5	974.0
LLC-18 cr6	LLC-18	LLC-41	Circular	4	110	967.8	967.3
LLC-18nat	LLC-18	LLC-17	Natural		15	984.5	984.5
LLC-19 cr6	LLC-19	LLC-24	Circular	4.5	130	977.8	975.9
LLC-19 cr6	LLC-19	LLC-24	Natural		40	993.9	993.9
LLC-20 26	LLC-20mh1	LLC-21	Circular	2.25	177	990.8	990.0

Table IV.Appendix.1-E2
Summary of Hydraulic Input Parameters (links) for Long Lake Creek Watershed

Name	US Node	DS Node	Shape*	Diameter/ Depth* (ft)	Length* (ft)	Upstream Invert Elevation* (ft)	Downstream Invert Elevation (ft)
LLC-20 27	LLC-20	LLC-20mh1	Circular	1.75	719	994.1	991.3
LLC-21 pd	LLC-21	LLC-22	Natural		15	996.9	996.9
LLC-22nat	LLC-22	LLC-22 FN1	Natural		100	993.0	993.0
LLC-22 Hdr	LLC-22 FN1	LLC-23	Circular	1.25	75	986.2	982.2
LLC-22 Hdr	LLC-22 FN1	LLC-23	Natural		30	990.0	990.0
LLC-23nat1	LLC-23	LLC-24	Natural		100	979.0	979.0
LLC-24Lkrd	LLC-24	LLC-41	Rectangular	5	32	943.4	943.0
LLC-24Lkrd	LLC-24	LLC-41	Natural		30	947.0	947.0
LLC-25BRd1	LLC-25 FN1	LLC-25mh1	Circular	1	90	981.3	980.8
LLC-25BRd2	LLC-25mh1	LLC-41	Circular	2	160	980.5	976.7
LLC-25nat	LLC-25	LLC-25 FN1	Natural		500	984.5	981.3
LLC-26out	LLC-26	LLC-26pond	Circular	1.5	44	1010.3	1010.0
LLC-26us12	LLC-26pond	LLC-27 FN1	Circular	2	122	1008.2	1006.8
LLC-27nat	LLC-27 FN1	LLC-27	Trapezoidal	1.5	689	1006.8	1002.6
LLC-28 WDr	LLC-28	LLC-30 FN1	Circular	3	97	1000.3	999.1
LLC-28nat	LLC-28 FN1	LLC-28	Natural	3.25	885	1002.3	1000.3
LLC-29nat	LLC-29	LLC-30 FN2	Natural	6	1181	999.6	995.7
LLC-30 pd	LLC-30	LLC-35	Circular	4	98	976.1	972.1
LLC-30nat1	LLC-30 FN1	LLC-30 FN2	Trapezoidal	4.3	37.5	999.1	995.7
LLC-30nat2	LLC-30 FN2	LLC-30	Natural	4.3	1722	995.7	976.1
LLC-31 WDr	LLC-31	LLC-32	Circular	2	68	996.6	996.0
LLC-32 HDr	LLC-32	LLC-33	Circular	2.5	119	984.6	984.0
LLC-33 pd	LLC-33	LLC-34	Circular	2	107	981.7	980.8
LLC-34 RR	LLC-34	LLC-35	Circular	4	91	972.5	972.0

Table IV.Appendix.1-E2
Summary of Hydraulic Input Parameters (links) for Long Lake Creek Watershed

Name	US Node	DS Node	Shape*	Diameter/ Depth* (ft)	Length* (ft)	Upstream Invert Elevation* (ft)	Downstream Invert Elevation (ft)
LLC-35 DSt	LLC-35	LLC-36	Circular	3	131	960.4	958.8
LLC-36us12	LLC-36	LLC-38 FN1	Circular	6	100	951.7	951.4
LLC-37 BRd	LLC-37 FN1	LLC-38 FN1	Circular	4	868	968.0	951.5
LLC-38 orifice			Circular	0		945.5	
LLC-38nat	LLC-38 FN1	LLC-38	Natural	7	1000	951.4	945.0
LLC-38pipe	LLC-38 mh1	LLC-38s	Circular	3	200	941.5	940.6
LLC-38weir	LLC-38s	LLC-41	Trapezoidal	2	130	944.5	944.0
LLC-39us12	LLC-39	LLC-41	Circular	2.25	436	944.9	944.3
LLC-40 pd	LLC-40	LLC-41	Circular	1.75	23	954.2	954.2
LLC-40 pd	LLC-40	LLC-41	Natural		15	959.0	959.0
LLC-41 R&R	LLC-41 FN8	LLC-43	Circular	5.5	170	939.2	938.8
LLC-41nat1	LLC-41 FN1	LLC-41 FN2	Natural		120	943.1	942.5
LLC-41nat2	LLC-41 FN3	LLC-41 FN4	Natural		76	942.2	941.9
LLC-41nat3	LLC-41 FN4	LLC-41 FN5	Natural		239	941.9	940.8
LLC-41nat4	LLC-41 FN5	LLC-41 FN6	Natural		150	940.8	940.1
LLC-41nat5	LLC-41 FN6	LLC-41 FN7	Natural		19	940.1	939.2
LLC-41nat6	LLC-41 FN7	LLC-41 FN8	Natural		1	939.2	939.2
LLC-41out	LLC-41	LLC-41 FN1	Rectangular	6	39	944.3	943.1
LLC-41us12	LLC-41 FN2	LLC-41 FN3	Rectangular	6	54	942.5	942.0
LLC-42nat	LLC-42	LLC-41 FN8	Natural		50	953.9	953.9
LLC-43nat1	LLC-43	LLC-43FN1	Natural		30	938.8	939.3
LLC-43nat2	LLC-43FN1	LLC-43 FN2	Natural		555	939.3	939.1
LLC-43nat3	LLC-43 FN2	LLC-43 FN3	Natural		495	939.1	937.4
LLC-43nat4	LLC-43 FN3	LLC-43 FN4	Natural		41	937.4	937.3

Table IV.Appendix.1-E2
Summary of Hydraulic Input Parameters (links) for Long Lake Creek Watershed

Name	US Node	DS Node	Shape*	Diameter/ Depth* (ft)	Length* (ft)	Upstream Invert Elevation* (ft)	Downstream Invert Elevation (ft)
LLC-43nat5	LLC-43 FN4	LLC-43 FN5	Natural		1	937.3	937.3
LLC-43ord	LLC-43 FN5	LLC-47 FN1	Circular	4	58	937.3	937.6
LLC-43ord	LLC-43 FN5	LLC-47 FN1	Circular	4	55	938.3	938.6
LLC-44ord	LLC-44	LLC-45	Circular	1.25	225	954.0	947.9
LLC-44ord	LLC-44	LLC-45	Natural		50	963.0	963.0
LLC-45ord Orifice			Rectangular	2		941.5	
LLC-45ordC	LLC-45	LLC-45 mh1	Circular	2	50	940.1	939.0
LLC-45ordT	LLC-45	LLC-47	Natural		30	947.0	947.0
LLC-46Luce	LLC-46	LLC-47	Circular	2	61	937.5	937.5
LLC-46Luce	LLC-46	LLC-47	Circular	1	60	937.5	937.4
LLC-47BrRd	LLC-47	LLC-50	Circular	5	228	933.5	931.7
LLC-47nat1	LLC-47 FN1	LLC-47 FN2	Natural		30	937.6	938.8
LLC-47nat2	LLC-47 FN2	LLC-47 FN3	Natural		350	938.8	938.3
LLC-47nat3	LLC-47 FN3	LLC-47	Natural		400	938.3	936.0
LLC-48Luce	LLC-48	LLC-50	Circular	2.5	70	930.5	930.5
LLC-49BrRd	LLC-49	LLC-50	Circular	1	50	931.6	931.4
LLC-49FRd	LLC-49	LLC-52	Natural		30	933.0	933.0
LLC-50FSt	LLC-50	LLC-52	Rectangular	4.5	50	927.3	927.3
LLC-51BrRd	LLC-51	LLC-52	Circular	3.5	60	931.5	931.9
LLC-52 R&R	LLC-52	LLC-53	Trapezoidal	6	50	927.0	927.0
LLC-53cr15	LLC-53	LM-all	Trapezoidal	18	40	921.4	921.4
Deer Hill Wetland					20	966.0	

* Length and crest elevation provided for weirs. Shape, height and invert elevation provided for orifices. For more details refer to XP-SWMM model.

Table IV.Appendix.1-E3
Node Results for Long Lake Creek Watershed

Node Name	NWL (feet)	HWL (feet)			
		Existing		2020	Snow-melt
		1.5-yr, 24-hr (2.6 inches)	100-yr, 24-hr (6.0 inches)	100-yr, 24-hr (6.0 inches)	100-yr, 10-y (7.2 inches)
LLC-1	998.0	998.4	999.0	999.0	998.9
LLC-1 FN1	997.1	997.7	998.0	998.0	997.9
LLC-1pond	996.7	998.1	998.9	998.9	998.8
LLC-2	986.0	986.6	987.3	987.4	987.7
LLC-2 FN1	982.6	986.5	987.2	987.2	987.4
LLC-3	973.4	975.8	978.7	978.8	978.2
LLC-4	963.0	964.5	965.9	965.9	966.0
LLC-4 FN1	962.4	964.3	964.9	965.0	965.0
LLC-5	959.7	961.0	961.9	961.9	961.7
LLC-6	957.0	958.8	960.4	960.4	961.1
LLC-6 FN1	957.6	958.8	960.3	960.4	961.1
LLC-7	978.5	985.1	985.2	985.2	985.1
LLC-8	972.9	975.2	977.2	977.3	977.3
LLC-9	971.2	973.5	975.5	975.6	975.7
LLC-9 FN1	970.8	973.2	974.1	974.3	974.4
LLC-9 FN2	968.5	970.7	973.7	973.9	974.1
LLC-10	994.7	995.2	996.1	996.2	996.6
LLC-11	987.0	988.0	989.7	989.8	989.7
LLC-11 FN1	984.4	985.7	987.2	987.4	987.3
LLC-12	966.0	968.0	969.8	969.8	969.7
LLC-13	966.0	968.0	969.6	969.7	969.5
LLC-14	952.0	953.4	957.3	957.7	960.0
LLC-15	949.0	949.8	951.2	951.2	951.9
LLC-16	944.3	945.5	948.6	948.7	949.8
LLC-17	971.6	973.7	975.0	975.1	974.1
LLC-18	967.8	969.1	970.3	970.4	969.8

Table IV.Appendix.1-E3
Node Results for Long Lake Creek Watershed

Node Name	NWL (feet)	HWL (feet)			
		Existing		2020	Snow-melt
		1.5-yr, 24-hr (2.6 inches)	100-yr, 24-hr (6.0 inches)	100-yr, 24-hr (6.0 inches)	100-yr, 10-y (7.2 inches)
LLC-19	977.8	979.0	980.3	980.4	979.9
LLC-20	994.1	995.2	996.8	996.9	996.4
LLC-20mh1	990.8	991.7	992.1	992.1	992.1
LLC-21	988.2	988.6	989.6	989.6	990.5
LLC-22	983.0	989.5	994.3	994.3	994.6
LLC-22 FN1	986.2	986.2	990.2	990.2	990.4
LLC-23	970.0	970.7	971.8	971.9	973.5
LLC-24	945.5	945.5	946.9	947.0	947.7
LLC-25	984.5	985.2	986.3	986.4	986.2
LLC-25 FN1	981.3	984.6	986.3	986.4	986.2
LLC-25mh1	980.5	981.1	981.2	981.2	981.2
LLC-26	1010.3	1014.2	1016.2	1016.4	1015.4
LLC-26pond	1008.2	1009.7	1009.9	1010.0	1009.8
LLC-27	1004.7	1006.0	1006.9	1007.1	1006.1
LLC-27 FN1	1006.8	1007.3	1007.8	1007.9	1007.5
LLC-28	1000.3	1001.7	1002.5	1002.7	1001.8
LLC-28 FN1	1002.3	1003.9	1004.7	1004.8	1004.0
LLC-29	999.6	1000.0	1000.4	1000.5	1000.0
LLC-30	976.1	978.0	981.2	982.3	978.1
LLC-30 FN1	999.1	999.6	999.9	999.9	999.6
LLC-30 FN2	995.7	997.0	998.2	998.5	997.2
LLC-31	996.6	997.9	999.5	999.5	998.3
LLC-32	984.6	986.9	991.7	992.3	986.8
LLC-33	981.7	985.6	990.1	990.5	985.7
LLC-34	972.5	975.9	978.8	979.1	975.8
LLC-35	960.4	966.0	975.9	977.0	965.1

Table IV.Appendix.1-E3
Node Results for Long Lake Creek Watershed

Node Name	NWL (feet)	HWL (feet)			
		Existing		2020	Snow-melt
		1.5-yr, 24-hr (2.6 inches)	100-yr, 24-hr (6.0 inches)	100-yr, 24-hr (6.0 inches)	100-yr, 10-y (7.2 inches)
LLC-36	951.7	956.5	958.6	958.7	956.1
LLC-37	972.0	974.6	977.0	977.2	976.0
LLC-37 FN1	968.0	968.4	969.1	969.3	968.5
LLC-38	945.5	952.0	954.2	954.7	952.8
LLC-38 FN1	951.4	955.9	957.3	957.4	955.6
LLC-38s	944.5	945.9	946.4	946.5	947.7
LLC-38 mh1	941.5	947.8	948.2	948.2	948.0
LLC-39	944.9	946.8	948.8	948.9	947.7
LLC-40	954.2	957.4	959.0	959.1	959.6
LLC-41	944.3	944.8	946.3	946.4	947.7
LLC-41 FN1	943.1	944.1	945.9	946.0	947.3
LLC-41 FN2	942.5	944.0	945.8	945.9	947.3
LLC-41 FN3	942.0	942.8	943.9	943.9	945.1
LLC-41 FN4	941.9	942.6	943.8	943.9	945.0
LLC-41 FN5	940.8	942.0	943.7	943.8	945.0
LLC-41 FN6	940.1	941.8	943.6	943.7	944.9
LLC-41 FN7	939.2	941.8	943.6	943.7	944.9
LLC-41 FN8	939.2	941.8	943.6	943.7	944.9
LLC-42	945.0	946.7	949.7	949.9	953.5
LLC-43	938.8	941.7	942.5	942.6	943.0
LLC-43FN1	939.3	941.6	942.4	942.5	942.9
LLC-43 FN2	939.1	940.8	941.8	941.9	942.8
LLC-43 FN3	937.4	940.4	941.8	941.9	942.8
LLC-43 FN4	937.3	940.4	941.8	941.9	942.7
LLC-43 FN5	937.3	940.3	941.8	941.9	942.7
LLC-44	954.0	957.3	958.8	958.9	960.4

Table IV.Appendix.1-E3
Node Results for Long Lake Creek Watershed

Node Name	NWL (feet)	HWL (feet)			
		Existing		2020	Snow-melt
		1.5-yr, 24-hr (2.6 inches)	100-yr, 24-hr (6.0 inches)	100-yr, 24-hr (6.0 inches)	100-yr, 10-y (7.2 inches)
LLC-45	940.1	942.1	943.7	943.7	943.2
LLC-45 mh1	939.0	942.1	942.9	942.9	942.7
LLC-46	937.5	938.6	939.6	939.7	939.4
LLC-47	933.5	936.5	937.9	938.0	937.9
LLC-47 FN1	937.6	940.2	941.2	941.3	941.7
LLC-47 FN2	938.8	940.2	941.2	941.3	941.7
LLC-47 FN3	938.3	939.4	940.3	940.3	940.6
LLC-48	930.5	936.3	940.6	941.3	937.7
LLC-49	931.6	932.5	933.3	933.4	933.3
LLC-50	928.4	929.5	930.1	930.1	930.4
LLC-51	931.5	932.2	932.9	932.9	933.1
LLC-52	929.0	929.3	930.0	930.0	930.5
LLC-53	929.0	929.3	930.0	930.0	930.5

Table IV.Appendix.1-E4
Summary of Link Results for Long Lake Creek Watershed

Link or Multi Link Name	Shape	Existing				2020		Snow-melt Event 100-year, 10-day	
		1.5-year, 24-hour		100-year, 24-hour		100-year, 24-hour			
		Q_p (cfs)	Peak Velocity (ft/s)	Q_p (cfs)	Peak Velocity (ft/s)	Q_p (cfs)	Peak Velocity (ft/s)	Q_p (cfs)	Peak Velocity (ft/s)
LLC-1 pd	Circular	5.6	3.8	12.4	5.8	12.7	5.8	11.7	5.5
LLC-1 pd	Natural	0.0	0.0	0.0	0.0	0.0	0.0	0.0	0.0
LLC-1nat1	Natural	6.7	1.5	23.0	2.6	24.0	2.7	14.2	1.5
LLC-1nat2	Natural	5.6	0.2	12.4	0.3	12.7	0.3	11.7	0.2
LLC-2 pd	Circular	4.1	0.6	16.9	2.4	17.5	2.5	22.3	3.1
LLC-2 pd	Natural	0.0	0.0	0.0	0.0	0.0	0.0	0.0	0.0
LLC-2cr24	Circular	4.1	4.8	16.9	7.0	17.5	7.1	22.3	7.5
LLC-2cr24	Natural	0.0	0.0	0.0	0.0	0.0	0.0	0.0	0.0
LLC-3cr24	Circular	13.8	4.9	24.1	7.9	24.6	8.0	22.6	7.5
LLC-3cr24	Natural	0.0	0.0	0.0	0.0	0.0	0.0	0.0	0.0
LLC-4 pd	Circular	16.5	3.2	44.2	6.9	45.4	7.3	41.6	6.3
LLC-4 pd	Natural	0.0	0.0	35.0	1.9	38.3	1.9	43.6	2.0
LLC-4nat	Natural	16.5	2.1	76.7	3.1	84.1	3.2	84.7	1.8
LLC-5 tr	Circular	0.9	2.5	3.6	4.8	3.7	5.0	3.2	4.3
LLC-5 tr	Natural	1.4	0.6	91.1	2.9	103.4	3.0	61.2	2.5
LLC-6 tr	Circular	1.8	1.1	14.0	3.2	14.6	3.4	12.1	2.4
LLC-6 tr	Natural	0.0	0.0	39.0	1.1	42.1	1.1	117.4	1.1
LLC-6nat	Natural	1.8	0.7	45.7	0.7	48.5	0.7	121.9	0.7
LLC-7 Tdr	Circular	28.5	9.1	28.8	9.2	28.8	9.2	28.5	9.1
LLC-7 Tdr	Natural	42.6	0.6	200.8	1.3	215.2	1.3	41.7	0.6
LLC-8cr24	Circular	17.2	3.8	40.4	6.0	40.6	6.0	40.8	6.1
LLC-8cr24	Natural	0.0	0.0	0.0	0.0	0.0	0.0	0.0	0.0
LLC-9 pd	Circular	29.1	3.8	86.2	7.4	90.2	7.6	88.7	7.4
LLC-9 pd	Natural	0.0	0.0	0.0	0.0	1.3	0.6	2.1	0.8
LLC-9DhRd	Circular	29.1	5.9	81.1	11.6	83.8	12.0	85.3	12.2

Table IV.Appendix.1-E4
Summary of Link Results for Long Lake Creek Watershed

Link or Multi Link Name	Shape	Existing				2020		Snow-melt Event 100-year, 10-day	
		1.5-year, 24-hour		100-year, 24-hour		100-year, 24-hour			
		Q_p (cfs)	Peak Velocity (ft/s)	Q_p (cfs)	Peak Velocity (ft/s)	Q_p (cfs)	Peak Velocity (ft/s)	Q_p (cfs)	Peak Velocity (ft/s)
LLC-9DhRd	Natural	0.0	0.0	0.0	0.0	0.0	0.0	0.0	0.0
LLC-9nat	Natural	29.3	1.3	86.9	1.3	90.8	1.3	86.7	1.3
LLC-10cr24	Circular	1.2	2.4	8.6	4.1	9.1	4.2	11.7	4.5
LLC-11 Mtr	Circular	10.9	5.8	21.3	6.7	21.4	6.7	21.3	6.7
LLC-11 Mtr	Natural	0.0	0.0	26.8	2.3	32.8	2.4	29.9	2.3
LLC-11nat	Natural	10.9	2.0	45.4	2.8	51.0	2.8	48.3	2.8
LLC-12weir (Deer Hill Wetland)	Weir	*	*	*	*	*	*	*	*
LLC-13nat	Natural	28.8	1.5	140.5	1.5	162.3	1.5	256.1	1.6
LLC-14 cr6	Circular	28.9	8.6	150.4	13.5	157.5	14.0	198.3	15.8
LLC-15weir (LLC-15 orifice1)	Orifice	*	*	*	*	*	*	*	*
LLC-15weir (LLC-15 orifice2)	Orifice	*	*	*	*	*	*	*	*
LLC-15weir (LLC-15 orifice3)	Orifice	*	*	*	*	*	*	*	*
LLC-15weir (LLC-15 orifice4)	Orifice	*	*	*	*	*	*	*	*
LLC-15weir (LLC-15 orifice5)	Orifice	*	*	*	*	*	*	*	*
LLC-15weir (LLC-15weir.1)	Weir	*	*	*	*	*	*	*	*
LLC-16 pd	Circular	28.1	5.5	128.2	10.6	130.4	10.7	145.9	11.8
LLC-16 pd	Natural	0.0	0.0	0.0	0.0	0.0	0.0	56.5	1.9
LLC-17 cr6	Circular	20.8	4.7	39.5	6.2	40.2	6.3	27.6	5.2
LLC-17 cr6	Rectangular	0.0	0.0	26.7	4.3	31.2	4.5	0.0	0.0
LLC-18 cr6	Circular	13.4	4.6	45.1	6.2	47.8	6.3	30.0	5.6
LLC-18nat	Natural	0.0	0.0	0.0	0.0	0.0	0.0	0.0	0.0
LLC-19 cr6	Circular	15.9	5.1	56.6	7.0	61.7	7.1	42.9	6.5
LLC-19 cr6	Natural	0.0	0.0	0.0	0.0	0.0	0.0	0.0	0.0
LLC-20 26	Circular	5.0	3.7	9.7	4.4	9.7	4.4	9.0	4.3
LLC-20 27	Circular	5.0	3.8	9.7	4.6	9.7	4.7	9.0	4.4
LLC-21 pd	Natural	0.0	0.0	0.0	0.0	0.0	0.0	0.0	0.0

Table IV.Appendix.1-E4
Summary of Link Results for Long Lake Creek Watershed

Link or Multi Link Name	Shape	Existing				2020		Snow-melt Event 100-year, 10-day	
		1.5-year, 24-hour		100-year, 24-hour		100-year, 24-hour			
		Q_p (cfs)	Peak Velocity (ft/s)	Q_p (cfs)	Peak Velocity (ft/s)	Q_p (cfs)	Peak Velocity (ft/s)	Q_p (cfs)	Peak Velocity (ft/s)
LLC-22nat	Natural	0.0	0.0	17.8	1.7	20.3	1.7	36.0	2.1
LLC-23 Hdr	Circular	0.0	0.0	14.8	12.1	14.8	12.1	15.0	12.1
LLC-23 Hdr	Natural	0.0	0.0	3.0	1.0	5.5	1.3	21.0	2.1
LLC-23nat1	Natural	0.0	0.0	0.0	0.0	0.0	0.0	0.0	0.0
LLC-24Lkrd	Rectangular	61.3	7.6	138.4	10.0	144.2	10.1	93.5	7.6
LLC-24Lkrd	Natural	0.0	0.0	0.0	0.0	0.0	0.0	4.4	0.1
LLC-25BRd1	Circular	5.3	6.8	6.6	8.3	6.6	8.3	6.5	8.1
LLC-25BRd2	Circular	5.3	7.1	6.6	7.4	6.6	7.5	6.5	7.4
LLC-25nat	Natural	5.6	0.7	18.6	0.9	20.4	0.9	6.6	0.6
LLC-26out	Circular	16.2	9.2	21.0	11.8	21.5	12.0	18.9	10.6
LLC-26us12	Circular	16.2	9.4	21.0	9.9	21.4	9.9	18.9	9.7
LLC-27weir (WEIR#4.2)	Weir	*	*	*	*	*	*	*	*
LLC-27nat	Trapezoidal	16.2	1.1	21.1	1.2	21.5	1.2	19.0	1.2
LLC-28 WDr	Circular	25.7	12.0	60.8	16.1	68.3	16.8	30.1	12.7
LLC-28nat	Natural	24.5	1.6	55.6	1.9	62.1	2.0	27.3	1.6
LLC-29nat	Natural	20.1	4.0	63.5	7.9	94.0	5.6	16.9	2.5
LLC-30 pd	Circular	55.0	12.2	182.5	15.7	211.5	17.5	57.2	12.2
LLC-30nat1	Trapezoidal	25.7	2.6	60.8	5.5	68.3	5.0	30.1	2.4
LLC-30nat2	Natural	33.9	3.1	105.1	4.0	174.8	4.0	45.7	3.3
LLC-31 WDr	Circular	8.2	4.1	18.6	6.4	19.1	6.5	11.8	4.7
LLC-32 HDr	Circular	26.3	6.3	44.6	9.0	46.9	9.5	24.9	6.1
LLC-33 pd	Circular	27.3	8.8	42.4	13.4	43.7	13.7	27.7	9.0
LLC-34 RR	Circular	62.7	6.6	129.4	10.7	134.9	11.1	60.7	6.5
LLC-35 DSt	Circular	152.4	11.6	283.1	19.7	295.0	20.5	134.2	10.7
LLC-36us12	Circular	169.5	10.5	317.6	11.6	324.5	11.8	147.0	10.9
LLC-37orf (ORIF#2.2)	Orifice	*	*	*	*	*	*	*	*
LLC-37orf (WEIR#3.2)	Weir	*	*	*	*	*	*	*	*

Table IV.Appendix.1-E4
Summary of Link Results for Long Lake Creek Watershed

Link or Multi Link Name	Shape	Existing				2020		Snow-melt Event 100-year, 10-day	
		1.5-year, 24-hour		100-year, 24-hour		100-year, 24-hour			
		Q_p (cfs)	Peak Velocity (ft/s)	Q_p (cfs)	Peak Velocity (ft/s)	Q_p (cfs)	Peak Velocity (ft/s)	Q_p (cfs)	Peak Velocity (ft/s)
LLC-37 BRd	Circular	5.1	4.3	35.1	4.9	47.3	6.2	6.6	2.0
LLC-38nat	Natural	200.2	4.1	400.0	4.7	395.7	4.8	200.0	3.9
LLC-38orf (LLC-38 orifice)	Orifice	*	*	*	*	*	*	*	*
LLC-38pipe	Circular	50.0	7.0	53.4	7.5	53.6	7.5	49.8	7.0
LLC-38weir	Trapezoidal	50.0	3.8	53.4	3.9	53.5	3.9	49.1	3.0
LLC-39us12	Circular	9.8	3.5	18.6	5.4	19.0	5.4	12.0	3.6
LLC-40 pd	Circular	0.0	0.0	0.0	0.0	0.0	0.0	0.0	0.0
LLC-40 pd	Natural	0.0	0.0	0.0	0.0	0.0	0.1	22.8	1.6
LLC-41 R&R	Circular	30.2	2.7	91.7	4.9	95.3	5.0	134.5	6.1
LLC-41nat1	Natural	30.2	1.5	91.7	1.5	95.3	1.5	134.5	1.5
LLC-41nat2	Natural	30.2	1.2	91.7	1.4	95.3	1.4	134.5	1.4
LLC-41nat3	Natural	30.2	1.4	91.7	1.6	95.3	1.6	134.5	1.6
LLC-41nat4	Natural	30.2	1.4	91.7	1.5	95.3	1.5	134.5	1.5
LLC-41nat5	Natural	30.2	1.0	91.7	1.2	95.3	1.2	134.5	1.2
LLC-41nat6	Natural	30.2	0.9	91.7	1.1	95.3	1.1	134.5	1.1
LLC-41out	Rectangular	30.2	5.1	91.7	5.1	95.3	5.1	134.5	5.0
LLC-41us12	Rectangular	30.2	6.2	91.7	8.4	95.3	8.5	134.5	8.7
LLC-42nat	Natural	0.0	0.0	0.0	0.0	0.0	0.0	0.0	0.0
LLC-43nat1	Natural	52.1	2.0	151.9	3.5	158.4	3.5	135.2	2.4
LLC-43nat2	Natural	50.6	1.7	126.8	1.7	141.0	1.7	135.2	1.7
LLC-43nat3	Natural	46.6	0.7	117.1	0.5	127.5	0.5	135.2	0.5
LLC-43nat4	Natural	32.2	0.8	91.7	1.0	95.3	1.0	135.2	1.0
LLC-43nat5	Natural	32.2	0.6	91.7	1.1	95.3	1.1	135.2	1.2
LLC-43ord	Circular	19.5	2.1	47.7	3.8	49.2	3.9	65.1	5.1
LLC-43ord	Circular	12.7	2.3	44.0	4.4	46.0	4.5	70.1	6.0
LLC-44ord	Circular	0.0	0.0	0.0	0.0	0.0	0.0	0.0	0.0
LLC-44ord	Natural	0.0	0.0	0.0	0.0	0.0	0.0	0.0	0.0

Table IV.Appendix.1-E4
Summary of Link Results for Long Lake Creek Watershed

Link or Multi Link Name	Shape	Existing				2020		Snow-melt Event 100-year, 10-day	
		1.5-year, 24-hour		100-year, 24-hour		100-year, 24-hour			
		Q_p (cfs)	Peak Velocity (ft/s)	Q_p (cfs)	Peak Velocity (ft/s)	Q_p (cfs)	Peak Velocity (ft/s)	Q_p (cfs)	Peak Velocity (ft/s)
LLC-45ordC	Circular	2.4	0.9	11.6	3.7	11.9	3.8	8.9	2.8
LLC-45ordO (LLC-45ord Orifice)	Orifice	*	*	*	*	*	*	*	*
LLC-45ordT	Natural	0.0	0.0	0.0	0.0	0.0	0.0	0.0	0.0
LLC-46Luce	Circular	3.1	2.4	10.4	3.9	10.6	4.0	9.2	3.7
LLC-46Luce	Circular	1.4	2.2	2.6	3.8	2.7	3.8	2.4	3.5
LLC-47BrRd	Circular	83.9	8.1	142.5	9.2	144.4	9.2	141.3	9.1
LLC-47nat1	Natural	32.2	1.2	91.7	2.1	95.3	2.2	135.2	2.6
LLC-47nat2	Natural	32.2	1.7	91.7	2.6	95.3	2.6	135.2	2.9
LLC-47nat3	Natural	32.2	2.6	91.7	3.7	95.3	3.8	135.2	4.0
LLC-48Luce	Circular	42.5	8.9	62.1	12.5	64.2	12.9	50.3	10.3
LLC-49BrRd	Circular	1.5	2.5	2.6	3.8	2.6	3.8	2.6	3.8
LLC-49FRd	Natural	0.0	0.0	9.2	1.4	11.2	1.5	9.1	1.4
LLC-50FSt	Rectangular	126.6	3.1	221.4	4.3	225.6	4.4	187.9	4.1
LLC-51BrRd	Circular	0.6	0.8	5.2	2.3	5.3	2.3	7.8	2.7
LLC-52 R&R	Trapezoidal	422.1	1.3	422.1	2.2	422.1	2.2	222.4	1.7
LLC-53cr15	Trapezoidal	708.8	0.5	708.8	1.1	708.8	1.1	413.7	0.7

* For weir and/or orifice results see provided XP-SWMM model.

** Channel or pipe equalized with Lake Minnetonka. Discharge controlled at Grays Bay dam.

Table IV.Appendix.1-E5
Additional H/H Modeling Notes for Long Lake Creek Watershed

Subwatershed I.D.	H/H Modeling Notes
LLC-1	27-511W located in this subwatershed. 27-150P drains through 27-511W before flowing into School Lake. Finer resolution topographic contours (2 foot or less) needed to improve stage/storage of modeled depressions.
LLC-2	Finer resolution topographic contours (2 foot or less) needed to improve stage/storage of modeled depression.
LLC-3	Finer resolution topographic contours (2 foot or less) needed to improve stage/storage of modeled depression. Outlet detail provided by Hennepin County plans dated 1958. Performed rough survey of key topo areas.
LLC-4	27-155W located in this subwatershed. For increased model resolution, subdivide this subwatershed again at outlet of wetland 27-155W and add channel routing between 27-155W and 27-514W. Finer resolution topographic contours (2 foot or less) should be acquired before doing so.
LLC-5	Trail at eastern lobe outlet to main body of Wolsfeld Lake predicted to overtop during large storm events.
LLC-6	Trail at lake outlet predicted to overtop during large events. Outlet culvert restricted by approximately 1 foot of sediment.
LLC-7	Very difficult divide to discern. Wetland appears to feed into Long Lake as well as Elm Creek to north. Finer resolution topographic contours required for better boundary confidence.
LLC-8	27-478W located in this subwatershed; not explicitly modeled. Wetland 27-473 is subdivided by County Road 24. This subwatershed divided is located at the culvert under County Road 24 which divides the wetland and forms a constriction. Data was limited in this area. To add model resolution (sub divide into more subwatersheds) finer resolution topographic contours would be needed. For detailed work in this area, suggest acquiring 2 foot or finer topographic contours and collecting new outlet information. Culvert data was provided from Hennepin County plans dated 1958.
LLC-9	Survey work tied to west invert of 48 inch CMP entering into Deer Hill Pond (water quality pond). East and west invert elevation were about 0.47 feet off those shown in plans.
LLC-10	Verify and update boundaries if 2 foot topographic contours are acquired.
LLC-11	Sloping wetlands
LLC-12	MCWD Long Lake Improvement Project
LLC-13	Add channel cross sections if ravine detail wanted. Improved sediment/erosion assessment with added detail.
LLC-14	Assumed pipe RCP (vs. CMP) Field verify to improve. Add channel cross sections if ravine detail wanted
LLC-15	MCWD Long Lake Improvement Project
LLC-16	Survey work relative to interpolation of 2 foot topography. Tie to benchmark for improvement.
LLC-17	Complex wetland. Finer model resolution (smaller subwatershed) suggested for model improvement.
LLC-18	Complex wetland. Finer model resolution (smaller subwatershed) suggested for model improvement.
LLC-20	Improved stage/storage with finer resolution topographic contours.
LLC-21	Lowest walkout elevation at 992.85 (NGVD 1929). Landlocked basin highly sensitive to volumes. Lake outlet being considered.
LLC-22	Many small pocket wetlands in this subwatershed accounted for in depression storage. Area is landlocked and sensitive to volumes.

Table IV.Appendix.1-E5
Additional H/H Modeling Notes for Long Lake Creek Watershed

Subwatershed I.D.	H/H Modeling Notes
LLC-23	HWL dependent upon starting water elevation. Because landlocked, highly sensitive to added volume.
LLC-24	East Long Lake Road floods. Could improve survey work by tying to benchmark. 27-829W is also in this subwatershed (not explicitly modeled).
LLC-26	Hydraulics consistent with Mn/DOT XP-SWMM model.
LLC-27	Hydraulics consistent with Mn/DOT XP-SWMM model.
LLC-28	Hydraulics consistent with Mn/DOT XP-SWMM model.
LLC-29	Hydraulics consistent with Mn/DOT XP-SWMM model.
LLC-30	Hydraulics consistent with Mn/DOT XP-SWMM model.
LLC-31	Hydraulics consistent with Mn/DOT XP-SWMM model.
LLC-32	Hydraulics consistent with Mn/DOT XP-SWMM model.
LLC-33	Hydraulics consistent with Mn/DOT XP-SWMM model.
LLC-34	Hydraulics consistent with Mn/DOT XP-SWMM model.
LLC-35	Hydraulics consistent with Mn/DOT XP-SWMM model.
LLC-36	Hydraulics consistent with Mn/DOT XP-SWMM model.
LLC-37	Hydraulics consistent with Mn/DOT XP-SWMM model.
LLC-38	MCWD Long Lake Improvement Project Rainfall event critical in north basin, snowmelt event critical in south basin.
LLC-39	Information from Mn/DOT project #2713-75 (T.H.12) 65% plans. Verify when as-built information is available.
LLC-40	Buried outlet pipe no longer functions and serves to landlock subwatershed. Basin does not over top divide.
LLC-41	East Long Lake Road floods. Conflicting information pertaining to exact outlet elevation. Discrepancies minor and possibly related to shifting rock. Proposed changes related to Hwy 12 reconstruction. Watch for plan changes and potential future model updates.
LLC-42	Information from others conflicting. Could validate with further investigation
LLC-43	27-836W (old treatment lagoon) located in this watershed. Not directly connected to Long Lake Creek. Not explicitly modeled.
LLC-44	27-853W and 27-856 located in this subwatershed. Not explicitly modeled. Buried outlet pipe no longer functions and serves to landlock subwatershed. Basin does not over top divide.
LLC-46	27-858W in this subwatershed (no outlet, not modeled explicitly)
LLC-47	Conflicting information reported on culvert. Old plans. Could improve with new survey.
LLC-49	27-861W in this subwatershed (not explicitly modeled)
LLC-52	Backwater influence due to Lake Minnetonka water elevation.
LLC-53	Backwater influence due to Lake Minnetonka water elevation.

APPENDIX J
TMDLs

Elm Creek Watershed Management Commission Total Maximum Daily Load

A strategy for restoring a watershed in transition

Minnesota Pollution Control Agency

December 2016

wq-iw11-04e

Authors and Contributors

Rich Brasch, Three Rivers Park District

Brooke Asleson, Minnesota Pollution Control Agency

John Erdmann, Minnesota Pollution Control Agency

Kim Laing, Minnesota Pollution Control Agency

Randy Lehr, Ph.D., Sigurd Olson Environmental Institute, Northland College

Amy Timm, Three Rivers Park District

Brian Vlach, Three Rivers Park District

Justin Valenty, Three Rivers Park District

Marylee Murphy, Three Rivers Park District (former employee)

Table of Contents

TABLES

FIGURES

TMDL Summary Table

EPA/MPCA Required Elements	Summary	TMDL Page #
Location	Located within northern Hennepin County in both the Elm Creek Watershed and the North Fork Crow River Watershed in the upper Mississippi River Basin.	1
303(d) Listing Information		2

Waterbody	HUC/Lake I.D.	Pollutant/ Stressor	Listing Year
Diamond Creek	07010206-525	*E. coli*, Low DO, Fish & Macro-invertebrate bioassessment	2010, 2010, 2014, 2014
Rush Creek	07010206-528	*E. coli*, low DO, Fish & Macro-invertebrate bioassessment	2010, 2010, 2002, 2014
Rush Creek, S. Fork	07010206-732	*E. coli*, Fish & Macroinvertebrate bioassessment, chloride	2010, 2014, 2014, 2014
Rush Creek, S. Fork	07010206-760	Fish & Macro-invertebrate bioassessment	2014, 2014
Elm Creek	07010206-508	*E. coli*, low DO, Fish & Macro-invertebrate bioassessment, chloride	2010, 2004, 2014, 2014, 2014
Cowley Lake	27-0169	Nutrients	2010
Diamond Lake	27-0125	Nutrients	2006
Fish Lake	27-0118	Nutrients	2008
Henry Lake	27-0175	Nutrients	2008
Rice Lake - Main	27-0116-01	Nutrients	2010
Sylvan Lake	27-0171	Nutrients	These lakes are Not yet listed on the state's 303(d) list of impaired waters; however data indicate that these lakes qualify for inclusion on the list for nutrients due to impaired recreatio
Goose Lake	27-0122	Nutrients	

See Section 1.2 for remaining listing information; See Appendix I for list of MS4s receiving WLAs for each impaired water

<table>
<tr><td>Applicable Water Quality Standards/ Numeric Targets</td><td>Criteria set forth in Minn. R. 7050.0150 (3) and (6) (biotic integrity), 7050.0150 (5) and 7050.0222 (TP (TP) and E. coli), and 7050.0150 (subp. 2, 3, 4, 5. subp. 4) (low DO).

<table><tr><th>Waterbody</th><th>Numeric Target</th></tr><tr><td>Bacteria Impairments</td><td>No more than 126 organisms per 100 ml as a geometric mean of not less than five samples representative of conditions within any calendar month, nor more than 10% of all samples taken during any calendar month individually exceed 1,260 organisms per 100 ml</td></tr><tr><td>DO Impairments</td><td>No more than 10% of suitable samples are less than 5 mg/l DO</td></tr><tr><td>Fish bioassessment</td><td>Index of Biotic Integrity (IBI) threshold for fish of 40 for Northern Headwaters streams.</td></tr><tr><td>Macro-invertebrate bioassessment</td><td>IBI threshold for Macroinvertebrates of 46.8 for streams in the Southern Forest GP</td></tr><tr><td>Lake Nutrient Impairments</td><td>TP of 60 ug/l or less</td></tr></table></td><td>5</td></tr>
<tr><td>Loading Capacity (expressed as daily load)</td><td>Bacteria: See Section 4.1.1
Lake Nutrients: See Section 4.2.1
Biotic Integrity: See Section 4.3</td><td>29</td></tr>
<tr><td>Wasteload Allocation (WLA)</td><td>Bacteria: See Section 4.1.2
Lake Nutrients: See Section 4.2.2
Biotic Integrity: See Section 4.3</td><td>33</td></tr>
<tr><td>Load Allocation (LA)</td><td>Bacteria: See Section 4.1.3
Lake Nutrients: See Section 4.2.3
Biotic Integrity: See Section 4.3</td><td>34</td></tr>
<tr><td>Margin of Safety (MOS)</td><td>Bacteria: An explicit figure of 5% of the loading capacity for each flow regime was used to represent the MOS. See Section 4.1.4.
Lake Nutrients: Explicit MOS of 5% of the loading capacity of each lake. See Section 4.2.4
Biotic Integrity: An explicit 5% of loading capacity for pollutant stressors total suspended solids and TP. See Section 4.3.</td><td>34</td></tr>
<tr><td>Seasonal Variation</td><td>Bacteria: Load duration curve (LDC) methodology accounts for seasonal variations. See Section 4.1.5.
Lake Nutrients: See Section 4.2.5.</td><td>34</td></tr>
</table>

	Biotic Integrity: LDC methodology accounts for seasonal variations in the pollutant stressors of total suspended solids and TP. See Section 4.3.	
Reasonable Assurance	TMDL implementation will be carried out on an iterative basis so that implementation course corrections based on periodic monitoring can be made to adjust the strategy to meet the applicable standard. See Section 5.	66
Monitoring	Progress in implementing the TMDL will be measured through regular monitoring efforts of water quality and total best management practices (BMPs) completed and estimates of the load reduction associated with those BMPs where appropriate. This will be accomplished through the efforts of several cooperating organizations. See Section 6.	70
Implementation	This report sets forth an implementation framework to achieve the TMDL. See Section 7.1. The cost of compliance with the TMDL is included for the one permitted point source affected, and an estimated cost range for the overall effort to meet the TMDL based on various assumptions is also included. See Section 7.5.	72
Public Participation	See Section 8.0 Public comment period: July 5, 2016 to August 4, 2016	80

Acronyms

AUID	Assessment Unit ID
BMP	Best Management Practice
BOD	Biochemical Oxygen Demand
CADDIS	Causal Analysis/Diagnosis Decision Information System
CAFO	Concentrated Animal Feeding Operation
cfu	colony-forming unit
Chl-*a*	Chlorophyll-*a*
CBOD	Carbonaceous Biochemical Oxygen Demand
CLPW	Curly Leaf Pondweed
DO	Dissolved Oxygen
DNR	Minnesota Department of Natural Resources
E. coli	*Escherichia Coli*
ECWMC	Elm Creek Watershed Management Commission
EPA	Environmental Protection Agency
EQuIS	Environmental Quality Information System
GW	Groundwater
IBI	Index of Biotic Integrity
ISTS	Individual Sewage Treatment Systems
in/yr	inches per year
km^2	square kilometer
LA	Load Allocation
Lb	pound
lb/day	pounds per day
lb/yr	pounds per year
LDC	Load Duration Curve
LGU	Local Government Unit
m	meter
mg/L	milligrams per liter
mg/m^2-day	milligram per square meter per day
mL	milliliter

MID	Minimal Impacts Design
MOS	Margin of Safety
MnDOT	Minnesota Department of Transportation
MPCA	Minnesota Pollution Control Agency
MS4	Municipal Separate Storm Sewer Systems
MUSA	Metropolitan Urban Service Area
NBOD	Nitrogenous Biochemical Oxygen Demand
NCHF	North Central Hardwood Forest
NPDES	National Pollutant Discharge Elimination System
RR	Release rate
SID	Stressor Identification
SOD	Sediment Oxygen Demand
TAC	Technical Advisory Committee
TDLC	Total Daily Loading Capacity
TMDL	Total Maximum Daily Load
TP	Total phosphorus
TSS	Total Suspended Solids
USGS	U.S. Geological Survey
µg/L	microgram per liter
WLA	Wasteload Allocation
WRAPS	Watershed Restoration and Protection Strategy
WWTF	Wastewater Treatment Facility

Executive Summary

This Total Maximum Daily Load (TMDL) study addresses 22 impairments in the Elm Creek Watershed and 2 impairments in the Crow River Watershed, both of which are HUC-8 watersheds located in the upper Mississippi River Basin. Those in the Elm Creek Watershed include nutrient impairments in Fish Lake, Rice Lake, Diamond Lake, Goose Lake, and Henry Lake; *Escherichia Coli (E. coli)* bacteria impairments in Rush Creek-South Fork, Rush Creek mainstem, Diamond Creek, and Elm Creek; low dissolved oxygen (DO) impairments in Rush Creek mainstem, Diamond Creek, and Elm Creek; and both fish and Macroinvertebrate biotic integrity impairments for upper and lower reaches of the Rush Creek-South Fork, Rush Creek mainstem, Diamond Creek, and Elm Creek. The TMDL also includes nutrient impairments in Cowley Lake and Sylvan Lake in the Crow River Watershed.

All impaired water bodies lay within the jurisdictional limits of the Elm Creek Watershed Management Commission (ECWMC), who partnered with Minnesota Pollution Control Agency (MPCA) on this effort. The area within the jurisdictional limits of the ECWMC is about 83,600 acres (of which about 66,400 acres is the Elm Creek Watershed) and located in northwestern Hennepin County, Minnesota. The goal of this TMDL is to quantify the pollutant reductions needed to meet state water quality standards for the impaired lakes and streams. This TMDL is established in accordance with Section 303(d) of the Clean Water Act and provides wasteload allocations (WLAs) and load allocations (LAs) for the water bodies included.

Bacteria

Flow and bacteria monitoring data in Rush Creek-South Fork, Rush Creek mainstem, Diamond Creek, and Elm Creek were used to establish load duration curves (LDCs) to define the reductions necessary to meet the *E. coli* numeric standard. The TMDL, WLAs, and LAs were established for five flow categories: very high, high, mid-range, low and dry flow conditions. The necessary bacteria reductions range from no reduction to a 66% reduction during certain flow regimes to meet *E. coli* concentration standards. Implementation activities for the *E. coli*-impaired subwatersheds should focus on manure and pasture management initiatives, limiting livestock access to streams, septic system upgrades or hook-ups to regional sanitary collection and treatment facilities, and pet waste control measures.

Lakes

Nutrient budgets were developed for all seven lakes along with lake response models to set the WLAs and the Las for the TMDLs. Total nutrient reductions required to meet the lake water quality standards range from about 14% for Fish Lake (a deep lake) to between 73% and 89% to meet the shallow lake standards in the other six lakes. Nutrient reduction implementation strategies for all lakes should focus on both watershed and internal load reductions.

Fish/Macroinvertebrates and Low DO

The MPCA has developed an IBI to evaluate the biological health of streams in the state. There are IBIs for both fish and macroinvertebrates. Three stream reaches in the Rush Creek Subwatershed, as well as one reach each on Diamond Creek and Elm Creek, were listed as impaired for both fish and macroinvertebrate IBI. Impairment of the biological communities was most severe in the three stream reaches in the Rush Creek Subwatershed (Including the South Fork Subwatershed), moderate in Diamond Creek, and moderate to low in the Elm Creek, depending on the reach. In general, the analyses

suggest that multiple factors appear to be impacting fish communities, while the macroinvertebrate communities are impacted by a narrower range of stressors.

A stressor identification (SID) report was completed by Lehr (2015) based on the U.S. Environmental Protection Agency's (EPA's) Causal Analysis/Diagnosis Decision Information System (CADDIS) approach. The outcome of the SID process provided guidance to address the non-pollutant stressors of altered hydrology and altered physical habitat and established the need to prepare TMDLs using a LDC approach to address the pollutant stressors of total suspended solids (TSS) and total phosphorus (TP). Recently adopted stream water quality standards for TSS and TP were used to determine which stream reaches required TMDLs, with Diamond Creek and Elm Creek (but not Rush Creek) showing moderate exceedances of the TSS standard and all five stream reaches showing significant exceedances of the TP standard. The frequency and magnitude of exceedances for both parameters were generally highest in the upper reaches of each of the affected streams, where rural and agricultural land uses currently dominate.

Multiple implementation elements to address impairments are presented. These include the following:

- Application of stringent stormwater mitigations standards adopted by the ECWMC. The standards are based in part on the MPCA's Minimal Impacts Design (MIDs) project, which establish an initial abstraction of 1.1 inches of runoff from new impervious surfaces as the basis for achieving the performance objective. The ECWMC will apply those standards to development projects submitted for review after January 1, 2015. Application of these standards will significantly reduce existing TP, TSS, and other pollutant loadings from landscapes where intensive agricultural uses are replaced with urban uses meeting the mitigation standards. It will also hold to "no net increase" pollutant loads from low-export pre-development land uses that are converted to urban land uses
- Adoption and execution of standards governing the siting and management of new non-production livestock operations, such as those often associated with "hobby" farms.
- Outreach to existing agricultural operations to identify and implement projects to reduce winter spreading of manure, limit access of livestock to riparian areas, install buffer strips between cropland and/or livestock holding areas and water bodies, and promote fertilizer applications to cropland based on soil test results and crop nutrient needs.
- Education of urban residents on good housekeeping practices, such as use of no-phosphorus fertilizers were appropriate, proper disposal of pet waste, and establishing un-maintained buffer strips adjacent to water bodies.
- Promoting projects to enhance physical stream habitat, promote infiltration to reduce surface water runoff and enhance stream baseflows, and address internal loading affecting lakes where needed through management of roughfish, curly-leaf pondweed, and enriched sediments.

1. Project Overview

1.1 Purpose

This TMDL study is one component of an overall Watershed Restoration and Protection Strategy (WRAPS) designed to protect and restore key water resources within the Elm Creek Watershed as well as within the jurisdictional limits of the ECWMC. This TMDL study addresses *E. coli* impairments in four stream reaches, nutrient impairments in seven lakes, low DO impairments in three stream reaches, and impairments for both fish and Macroinvertebrate biotic integrity in five stream reaches.

Figure 1 shows the hydrologic boundary of the Elm Creek Watershed, the jurisdictional limits of the ECWMC, key water features that will be addressed in this document, the municipalities that are included within the project area, and key cultural features. The Elm Creek Watershed covers an area of approximately 104 square miles (66,400 acres) and is located in the northwest part of the Minneapolis-St. Paul seven county Metro Area. The subwatershed is drained by Elm Creek and its major tributaries, Diamond Creek and Rush Creek. Water movement in the watershed is generally from the west and south to the north and east, with Elm Creek discharging to the Mississippi River in the city of Champlin. The area within the jurisdictional limits of the ECWMC is approximately 130.6 square miles (83,600 acres). The watershed includes all or part of seven municipalities: Champlin, Corcoran, Dayton, Maple Grove, Medina, Plymouth, and Rogers.

Figure 1. Elm Creek Watershed Location, Northwest Twin Cities Metro Area

All but two of the impaired waters that will be addressed in this document lie within the hydrologic boundary of the Elm Creek Watershed. The exceptions are Cowley Lake and Sylvan Lake, both of which lie to the northwest of the Elm Creek hydrologic boundary in the Crow River Watershed within the city of Rogers. The impairments for both lakes are addressed in this document because they lie within the jurisdictional boundaries of the ECWMC. Cowley Lake was listed as impaired for nutrients on the state's 303(d) list in 2010, while Sylvan Lake is expected to be listed as impaired for nutrients based on in-lake

data collected as part of this project. Both the Commission and the MPCA felt it was important to address all current and reasonably expected impairments within the Commission's jurisdictional limits as part of this TMDL effort.

Figure 1 and Figure 2 shows the location of the Elm Creek Watershed in the state of Minnesota as well as within the state's ecoregions. The watershed is located entirely within the North Central Hardwood Forest (NCHF) Ecoregion.

Figure 2. Location of Elm Creek Watershed within North Central Hardwood Forest Ecoregion

1.2 Identification of Waterbodies

Numerous chemical and biotic impairments have been identified based on monitoring data collected by the MPCA, the ECWMC, and others during the 10-year period between 2003 and 2012.

Table 1 summarizes the current impairment listings for the watershed. With the exception of the chloride impairment for Elm Creek and Rush Creek, South Fork (07010206-732), all the impairments in Table 1 will be addressed in this report. The chloride impairment for Elm Creek and Rush Creek, South Fork are addressed in the Twin Cities Metropolitan Area (TCMA) Chloride TMDL.

Table 1. Listed Impaired Waters in the Elm Creek Watershed

Listed Stream Name (Reach Description) or Lake Name	Year Listed	Assessment Unit ID (AUID)	Affected Use	Pollutant or Stressor	303(d) List Scheduled Start/Completion dates
Diamond Cr.	2010	07010206-525	Aquatic recreation	*E. coli*	2009//2014
Diamond Cr.	2010, 2014, 2014	07010206-525	Aquatic life	Low DO, Fish Bioassessment, Macroinvertebrate Bioassessment	2009//2014
Rush Cr.	2010	07010206-528	Aquatic recreation	*E. coli*	2009//2014
Rush Cr.	2010, 2002, 2014	07010206-528	Aquatic life	Low DO, Fish Bioassessment, Macroinvertebrate Bioassessment	2009//2014 (2009/2013 for Fish Bioassessment only)
Rush Cr., S. Fork	2010	07010206-732	Aquatic recreation	*E. coli*	2009//2014
Rush Cr., S. Fork	2014, 2014, 2014	07010206-732	Aquatic life	Fish bioassessment, Macroinvertebrate bioassessment, chloride	2009//2014 (2009/2015 for chloride only)
S. Fork Rush Cr.	2014, 2014	07010206-760	Aquatic life	Fish bioassessment, Macroinvertebrate bioassessment	2009//2014
Elm Cr. – Headwaters	2010	07010206-508	Aquatic recreation	*E. coli*	2009//2014
Elm Cr. – Headwaters	2004, 2014, 2014, 2014	07010206-508	Aquatic life	Low DO, Fish bioassessment, Macroinvertebrate bioassessment, chloride	2009//2014 (2009/2015 for chloride only)
Cowley Lake	2010	27-0169	Aquatic Recreation	Nutrients	2009//2014
Diamond Lake	2006	27-0125	Aquatic Recreation	Nutrients	2009//2014
Fish Lake	2008	27-0118	Aquatic Recreation	Nutrients	2009//2014
Henry Lake	2008	27-0175	Aquatic Recreation	Nutrients	2009//2014
Rice Lake – Main	2010	27-0116-01	Aquatic Recreation	Nutrients	2009//2014
Sylvan Lake	Anticipated 2016*	27-0171	Aquatic Recreation	Nutrients	(2016//2018)
Goose Lake	Anticipated 2016*	27-0122	Aquatic Recreation	Nutrients	(2016//2018)

*Recent local water quality data indicates multiple exceedances of the standard. A formal assessment and listing process will be conducted when the data are received.

1.3 Priority Ranking

The MPCA projected schedule for TMDL completions, as indicated on the 303(d) impaired waters list, implicitly reflects Minnesota's priority ranking of the impairment listings that will be addressed in this TMDL. Ranking criteria for scheduling TMDL projects include, but are not limited to: impairment impacts on public health and aquatic life; public value of the impaired water resource; likelihood of completing the TMDL in an expedient manner, including a strong base of existing data and restorability of the waterbody; technical capability and willingness locally to assist the MPCA with developing the TMDL; and appropriate sequencing of TMDLs within a watershed or basin.

2. Applicable Water Quality Standards and Numeric Water Quality Targets

2.1 State of Minnesota Designated Uses

All waters listed in Table 1 are classified as class 2B waters for which aquatic life and recreation are the protected beneficial uses.

2.2 State of Minnesota Standards and Criteria for Listing

Following is a brief summary of the numerical water quality standards adopted by the state of Minnesota for the impairments that are addressed in this document.

E. coli. With the revisions of Minnesota's water quality rules in 2008, the state has now changed from a fecal coliform standard to an *E. coli* standard because of the latter's superior potential as an indicator of illness risk and lower cost for analysis (MPCA 2007). The revised standard now states:

> "*E. coli* concentrations are not to exceed 126 colony forming units per 100 milliliters (cfu/100ml) as a geometric mean of not less than five samples representative of conditions within any given calendar month, nor shall more than 10% of all samples taken during any calendar month individually exceed 1,260 cfu/100 ml. The standard applies only between April 1 and October 31."

Nutrients. Minnesota's standards for nutrients limit the quantity of nutrients which may be found in surface waters. Minnesota's standards at the time of listing (Minn. R. 7050.0150, subp. 3) stated that in all Class 2 waters of the state ". . . there shall be no material increase in undesirable slime growths or aquatic plants including algae." In accordance with Minn. R. 7050.0150, subp. 5, to evaluate whether a water body is in an impaired condition, the MPCA has developed "numeric translators" for the narrative standard for purposes of determining which lakes should be included in the Section 303(d) list as being impaired for nutrients. The translators established numeric thresholds for phosphorus, chlorophyll-a (Chl-*a*), and water clarity as measured by Secchi depth.

Minnesota adopted lake water quality standards in 2008 that differentiate between "deep" lakes and "shallow" lakes. Shallow lakes are defined as lakes with a maximum depth of 15 feet or less or with 80% or more of the lake area shallow enough to support emergent or submergent rooted aquatic plants (littoral zone). Conversely, deep lakes are defined as those with maximum depths over 15 feet and as having less than 80% of the lake area as littoral zone. This TMDL addresses impairments for both deep and shallow lakes. The numeric eutrophication standards that apply to each type of lake for the NCHF Ecoregion are presented in Table 2. In developing the lake nutrient standards for Minnesota lakes (Minn. R. 7050), the MPCA evaluated data from a large cross-section of lakes within each of the state's ecoregions (MPCA 2005). Clear relationships were established between the causal factor TP and the response variables Chl-*a* and Secchi transparency. Based on these relationships it is expected that by meeting the phosphorus target in each lake, the Chl-*a* and Secchi standards will likewise be met.

Table 2. Numeric Eutrophication Standards for Shallow and Deep Lakes within the NCHF Ecoregion

Parameters	Shallow Lakes[1]	Deep Lakes[1]
TP concentration (µg/L)	60	40
Chl-a concentration (µg/L)	20	14
Secchi disk transparency (meters)	>1.0	>1.4

[1] Numeric standards are June 1 – September 30 mean values

Low DO. Minnesota's water quality standard for DO for Class 2 waters is set forth in Minn. R. 7050.0222, subps. 2, 3, 4, and 5. Minn. R. 7050.0222, subp. 4, of this section address Class 2B surface waters as follows:

> "The quality of Class 2B surface waters shall be such as to permit the propagation and maintenance of a healthy community of cool or warm water sport or commercial fish and associated aquatic life, and their habitats. These waters shall be suitable for aquatic recreation of all kinds, including bathing, for which the waters may be usable.
>
> *DO 5.0 mg/l as a daily minimum*
>
> This DO standard may be modified on a site-specific basis according to subpart 8, except that no site-specific standard shall be less than 5 mg/l as a daily average and 4 mg/l as a daily minimum. Compliance with this standard is required 50% of the days at which the flow of the receiving water is equal to the lowest weekly flow with a once in 10-year recurrence interval (7Q10). . . " **.**

High stream phosphorus levels are implicated later in this report as a significant cause of low DO conditions that contribute to degraded stream biologic communities throughout the Elm Creek Watershed. The Elm Creek Watershed project area is located within the Central River Region as identified in the technical support document for stream phosphorus standards (MPCA 2013). Streams within the Central River Region are considered impaired if the mean summertime (June through September) values are greater than 100 ug/l.

Biotic Integrity. Minnesota's standard for biotic integrity is stated in Minn. R. 7050.0150, subps. 3 and 6. The standard uses an IBI which evaluates and integrates multiple attributes of the aquatic community, or metrics, to evaluate a complex biological system. Each metric is based on a structural (e.g. species composition) or functional (e.g. feeding habits) aspect of the aquatic community that changes in a predictable way in response to human disturbance. Fish and macroinvertebrate IBIs are expressed as a score that ranges from 0 to 100, with 100 reflecting the healthiest biotic community possible. The MPCA has evaluated fish and macroinvertebrate communities at numerous reference sites across Minnesota that has been minimally impacted by human activity, and has established IBI impairment thresholds based on stream drainage area, ecoregion, and major drainage basin. A stream's biota is considered to be impaired when the IBI falls below the threshold established for that category of stream. High stream TSS levels are implicated later in this report as a significant stressor to biologic communities in several stream reaches in the Elm Creek Watershed. The Elm Creek Watershed project area is located within the Central River region as identified in the technical support document for stream TSS standards (MPCA 2014). A stream within the Central River region is considered impaired for TSS if more than 10% of the April through September samples exceed 30 mg/l.

3. Watershed and Waterbody Characterization

3.1 Lakes

Table 3 shows basin morphometric data and watershed information for each of the seven lake impairments that will be addressed in this document.

Table 3. Key Information for Elm Creek Watershed Project Area Lakes Listed as Impaired

	Cowley	Diamond	Fish	Henry	Rice (Main)	Sylvan	Goose
DNR ID	27-0169	27-0125	27-0118	27-0175	27-0166-01	27-0171	27-0122
Surface Area (ac)	32.9	388.7	238.3	47.0	330.2	148.1	64.4
Max Depth (ft)	8	7.4	60.8	8.2	11	15	6.6
Mean depth (ft)	4.8	4	18.8	2.8	7.0	7.0	4.2
Volume (ac-ft)	155	1516	4364	121.2	2153	1021	270
Residence Time (yrs)	0.33	0.64	4.3	0.31	0.16	4.9	2.4
Littoral area (ac)	32.9	388.7	89.6	47.0	330.2	148.1	64.4
Littoral area (%)	100%	100%	38.6%	100%	100%	100%	100%
Watershed area (ac)	827	2,579	1616	812	17,461	320	240
Watershed area: lake area ratio	25.5 : 1	6.6 : 1	6.8 : 1	17.3 : 1	53 : 1	2.2: 1	3.7: 1
Municipalities in watershed	Rogers	Dayton, Rogers	Maple Grove, Plymouth	Rogers	Maple Grove, Plymouth, Medina, Corcoran	Rogers	Dayton, Champlin

Note that of the seven lakes identified in Table 3 and Table 4, all but Fish Lake are considered “shallow” lakes. In addition, Cowley, Henry, and Rice lakes all have moderate to very large watersheds draining to them relative to each lake’s surface area. Generally, shallow lakes with large contributing watersheds relative to their lake area present significant challenges in achieving in-lake water quality goals.

3.2 Streams

Table 3 presents information for each of the stream reaches listed as impaired and that will be addressed in this document.

Table 4. Key Information for Elm Creek Watershed Stream Reaches Listed as Impaired

	Elm Creek	Rush Creek	Rush Creek-South Fork	Rush Creek-South Fork	Diamond Creek
Reach AUID	07010206-508	07010206-528	07010206-732	07010206-760	07010206-525
Reach Length (mi)	21.1	16.9	4.2	0.5	5.9
Impairment listings	Fish and Macroinvertebrate IBI, *E. coli*, DO, chloride[1]	Fish and Macroinvertebrate IBI, *E. coli*, DO	Fish and Macroinvertebrate IBI, *E. coli,* chloride[1]	Fish and Macroinvertebrate IBI	Fish and Macroinvertebrate IBI, *E. coli*, DO
Watershed Area (ac) at bottom of reach	66,400	32,600	13,700 (2,240 between top and bottom of AUID)	6,750 (230 between top and bottom of AUID)	6,750
Municipalities in Watershed	Champlin, Dayton, Rogers, Maple Grove, Corcoran, Plymouth, Medina	Dayton, Rogers, Maple Grove, Corcoran, Medina	Maple Grove, Corcoran	Corcoran	Dayton, Rogers

[1]Note that the chloride impairments for Elm Creek and Rush Creek, South Fork (-732) will not be covered in this document but rather as part of the TCMA Chloride TMDL (MPCA 2016).

Figure 3 shows the locations of, and labels for, stream monitoring stations in the Elm Creek Watershed. Also shown are the municipal boundaries, the impairments for each of the stream reaches that will be addressed in this document, and AUID designations for each reach.

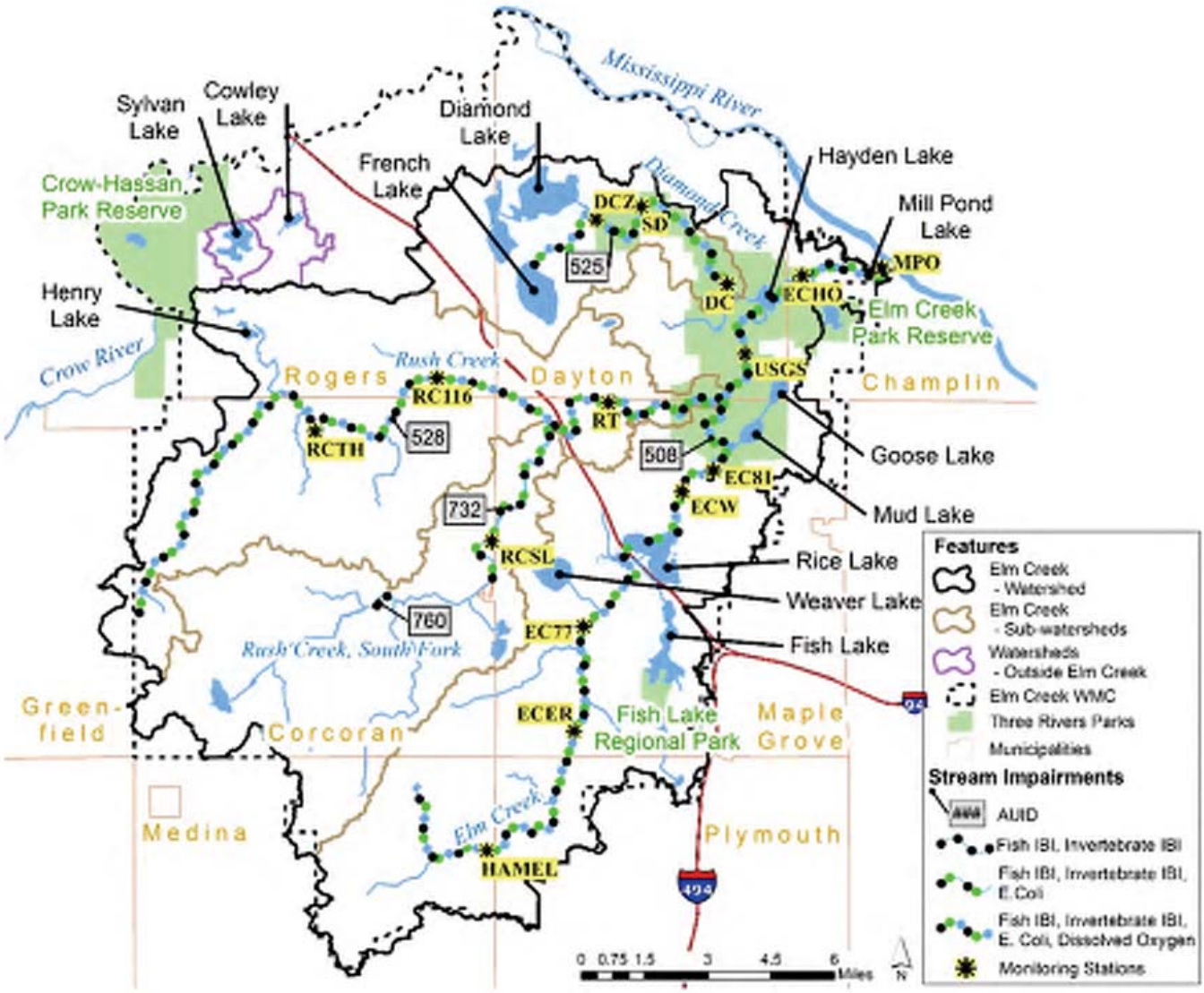

Figure 3. Stream Impairments and Monitoring Stations for Elm Creek Watershed

3.3 Land Use and Subwatersheds

Figure 4 shows 2010 land cover for the Elm Creek Watershed project area based on Metropolitan Council data and Table 5 summarizes land cover in the watershed by major land cover category. As noted in Section 1.1, Cowley and Sylvan Lakes are the only water bodies to be addressed in this document that lie outside the hydrologic boundary of the Elm Creek Watershed. Both Table 4 and Table 5 show the land cover characteristics of the Elm Creek Watershed as a whole in the far left-hand column, then separate land use data for the Rush Creek and Diamond Creek Tributary Subwatersheds, respectively, in the columns in the middle of the table. Land use data for the Sylvan Lake and Cowley Lake Subwatersheds are presented separately in the far right-hand columns.

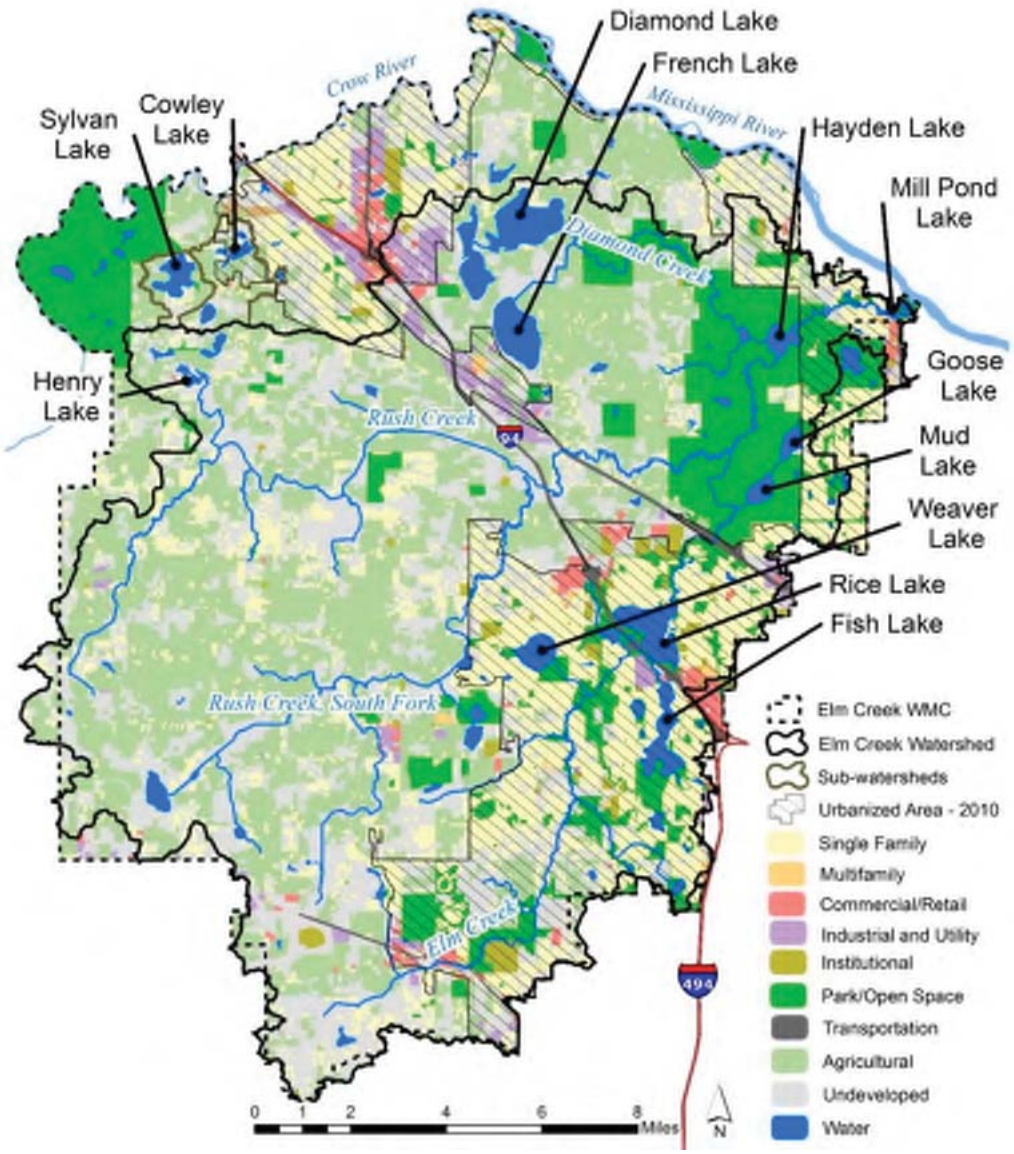

Figure 4. 2010 Land Cover in the Elm Creek, Cowley Lake, and Sylvan Lake Watersheds

Table 5. Summary of 2010 Land Cover in the Elm Creek, Cowley Lake, and Sylvan Lake Watersheds

Land Cover	Elm Creek Watershed[1]		Rush Creek sub-watershed		Diamond Creek sub-watershed		Cowley Lake sub-watershed[2]		Sylvan Lake sub-watershed[2]	
	Area (ac.)	%	Area (ac.)	%	Area (ac.)	%	Area (ac.)	%	Area (ac.)	%
Agricultural	21,309	32.1 %	15,359	47.5 %	2,379	36.2%	401	48.4%	170	53.3 %
Undeveloped	18,089	27.2 %	10,624	32.9 %	1,538	23.4%	259	31.4%	83	25.8 %
Park and Open Space	8,509	12.8 %	1,038	3.2%	1,057	16.1%	1	0.1%	9	2.8 %
Single Family	12,531	18.9 %	4,108	12.7 %	293	4.5%	98	11.8%	58	18.1 %
Multifamily	217	0.3%	32	0.1%	47	0.7%	4	0.5%	0	0.0 %
Retail/Commercial	739	1.1%	93	0.3%	103	1.6%	4	0.5%	0	0.0 %
Industrial/Utility	1,057	1.6%	370	1.1%	390	5.9%	0	0.0%	0	0.0 %
Institutional	822	1.2%	135	0.4%	30	0.5%	7	0.8%	0	0.0 %
Transportation	763	1.1%	225	0.7%	81	1.2%	0	0.0%	0	0.0 %
Water	2,347	3.5%	332	1.0%	654	10.0%	53	6.4%	0	0.0 %
Total	**66,382**		**32,315**		**6,571**		**827**		**320**	

[1] Includes land areas for Rush Creek and Diamond Creek Subwatersheds, but not Cowley Lake and Sylvan Lake (since both lie outside the Elm Creek Watershed hydrologic boundary)

[2] Excludes area of lake itself

Land use information of interest for this project includes the following:

1. The dominant land use in 2010, in the project area was agricultural, comprising about 32% of the Elm Creek Watershed, and 47% and 39% of the subwatershed area for Cowley Lake and Sylvan Lake, respectively. Cropland and pasture together make up most of this land use category.
2. Only about 25% of the Elm Creek Watershed is developed clustered in the eastern part of the watershed and along the Interstate 94 corridor. Less than 15% of the subwatershed area for Cowley Lake and Sylvan Lake are developed.
3. Undeveloped, a category which includes undevelopable wetlands in addition to lands that are currently vacant and developable is about 27% of the Elm Creek Watershed area.
4. Based on a review of the comprehensive land use plans prepared by each community within the project area, approximately 27,000 acres (about 40% of the area of the Elm Creek Watershed) are

expected to change land use between 2010 and 2030. For the Cowley Lake and Sylvan Lake Subwatersheds, the expected change is even larger, at 60% and 79%, respectively.

5. About 29% of the Elm Creek Watershed is designated as being within the Urbanized Area as defined by the 2010 census. Most of the area comprising the Rush Creek Subwatershed lies outside the 2010 Urbanized Area.
6. Similarly, about 53% of the watershed is within the Metropolitan Urban Service Area (MUSA). This relatively high percentage reflects the anticipation by regional and local governments of significant urban development in the future.

The 2010 census population of the watershed was about 93,000 persons in 33,600 households.

3.4 Current/Historic Water Quality

3.4.1 *E. coli*

A stream reach is placed on the 303(d) list of waters impaired for *E. coli* if the geometric mean of the aggregated monthly *E. coli* concentrations for one or more months exceeds 126 organisms per 100 ml (the "chronic" standard). A geometric mean is used to describe the central tendency of a set of data by dampening the effect of very high or very low numbers and is preferable to the arithmetic mean for analyzing bacteria data. A reach is also considered impaired if more than 10% of the individual samples within a month exceed the "acute" standard of 1,260 organisms per 100 ml.

Table 6 shows the monthly geomeans for April through October for all sample stations within the four *E. coli* impaired reaches in the Elm Creek Watershed. The data presented include the geometric means at each station in an upstream to downstream order for each impaired reach, the total number of samples, and the percentage of samples exceeding the acute standard of 1,260 organisms per 100 ml. Exceedances of the chronic and acute standard are highlighted in red. Data used are from the time period 2003 through 2012.

The data presented indicate that the most severe exceedances of the *E. coli* standard lie in the upper portions of the impaired stream reaches and in the areas of the Elm Creek Watershed that are dominated by rural and agricultural land uses. None of the data for monitoring stations below Station EC81 on Elm Creek show exceedances of either the acute or chronic *E. coli* standard in any month.

Table 6. Monthly Geometric Mean Values for *E. coli* - Impaired Stream Reaches

AUID 07010206-508 (Elm Creek)		**April**			**May**			**June**			**July**			**August**			**September**			**October**			**All Months**		
Site	Data Years	n	Geo	%n > 1260	n	Geo	%n > 1260	n	Geo	%n > 1260	n	Geo	%n > 1260	n	Geo	%n > 1260	n	Geo	%n > 1260	n	Geo	%n > 1260	n	Geo	%n > 1260
Hamel	2007-2012	15	74	7%	22	141	18%	22	263	9%	24	165	8%	25	180	12%	23	85	22%	26	129	12%	157	141	13%
ECER	2007-2012	11	31	0%	23	117	0%	22	185	5%	24	135	4%	21	220	10%	23	174	13%	20	165	10%	144	142	6%
EC77	2007-2012	12	33	0%	24	56	4%	22	157	5%	24	249	4%	25	207	4%	24	235	4%	24	125	8%	155	137	5%
ECW	2009-2012	10	6	0%	18	25	0%	18	36	0%	18	22	0%	19	44	0%	13	83	0%	9	24	11%	105	29	1%
EC81	2009-2012	12	15	0%	18	70	6%	19	132	0%	18	143	6%	19	182	5%	16	197	6%	18	99	11%	120	103	5%
USGS	2009-2012	11	30	0%	18	58	0%	18	91	0%	19	61	0%	19	109	5%	16	98	0%	19	60	0%	120	70	1%
ECHO	2009-2012	11	12	0%	19	25	0%	18	65	0%	18	56	0%	19	78	0%	17	114	0%	18	126	6%	120	57	1%
MPO	2009-2012	11	16	0%	14	42	0%	14	52	7%	18	37	6%	19	14	0%	16	21	0%	18	55	0%	110	30	2%
AUID 07010206-528 (Rush Creek)		**April**			**May**			**June**			**July**			**August**			**September**			**October**			**All Months**		
Site	Data Years	n	Geo	%n > 1260	n	Geo	%n > 1260	n	Geo	%n > 1260	n	Geo	%n > 1260	n	Geo	%n > 1260	n	Geo	%n > 1260	n	Geo	%n > 1260	n	Geo	%n > 1260
RCTH	2007-2012	12	9	0%	24	28	0%	23	113	4%	18	185	0%	17	295	12%	7	85	14%	13	110	15%	114	79	5%
RC116	2007-2012	12	10	0%	24	39	0%	22	151	9%	24	239	17%	24	202	21%	20	105	15%	19	51	11%	145	91	11%
RT	2007-2012	12	25	0%	23	30	0%	22	43	0%	25	52	0%	25	51	4%	22	47	0%	20	94	5%	149	46	1%
AUID 07010206-732 (Rush Creek South Fork)		**April**			**May**			**June**			**July**			**August**			**September**			**October**			**All Months**		
Site	Data Years	n	Geo	%n > 1260	n	Geo	%n > 1260	n	Geo	%n > 1260	n	Geo	%n > 1260	n	Geo	%n > 1260	n	Geo	%n > 1260	n	Geo	%n > 1260	n	Geo	%n > 1260
RCSL	2007-2012	13	53	0%	23	79	9%	23	129	0%	22	151	5%	25	141	8%	19	308	21%	18	342	28%	143	145	10%
AUID 07010206-525 (Diamond Creek)		**April**			**May**			**June**			**July**			**August**			**September**			**October**			**All Months**		
Site	Data Years	n	Geo	%n > 1260	n	Geo	%n > 1260	n	Geo	%n > 1260	n	Geo	%n > 1260	n	Geo	%n > 1260	n	Geo	%n > 1260	n	Geo	%n > 1260	n	Geo	%n > 1260
DCZ	2007-2012	12	125	0%	23	125	9%	22	89	5%	21	225	24%	23	374	22%	20	136	10%	23	149	13%	144	160	13%
SD	2009, 2012	0			7	106	0%	9	182	22%	10	134	0%	8	175	0%	5	219	0%	5	113	0%	44	150	5%
DC	2007-2012	13	10	0%	23	40	0%	23	46	4%	23	94	0%	25	213	8%	20	202	0%	21	166	14%	148	84	4%

Notes: n = number of samples
Geo = Geometric mean in MPN/100 ml
Values in red indicate violation of standard

3.4.2 Nutrients (Lakes)

Historical surface water quality data for TP, Chl-*a*, and water clarity for all seven lakes addressed in this report are summarized in Figure 5. Where data are available, the data presented in the figures extend back to mid-1990, though the focus for this TMDL is the 10-year period between 2003 and 2012. The data presented are mean values over the June through September period for each year. Dashed colored lines on each graph reflect the standard for a particular parameter (red for TP, green for Chl-*a*, and blue for Secchi disk transparency) for the NCHF ecoregion. Only Fish Lake is classified as a deep lake, therefore the eutrophication standards denoted on graph for Fish Lake are those for deep lakes. The remaining six lakes are all classified as shallow lakes and the graphs for each reflect those standards.

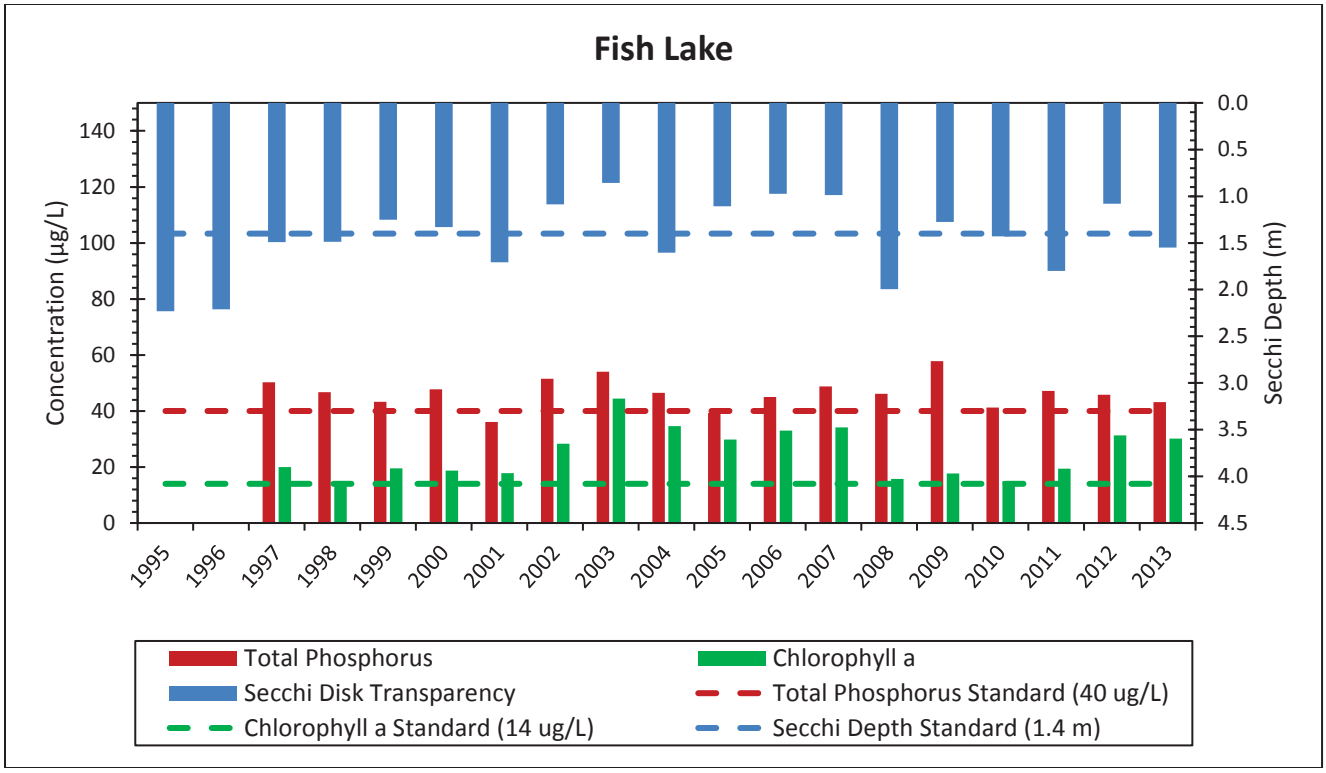

MPCA assessment period for listing determination 1998-2007.

Figure 5. Fish Lake Summer Average (June - September) Water Quality Data

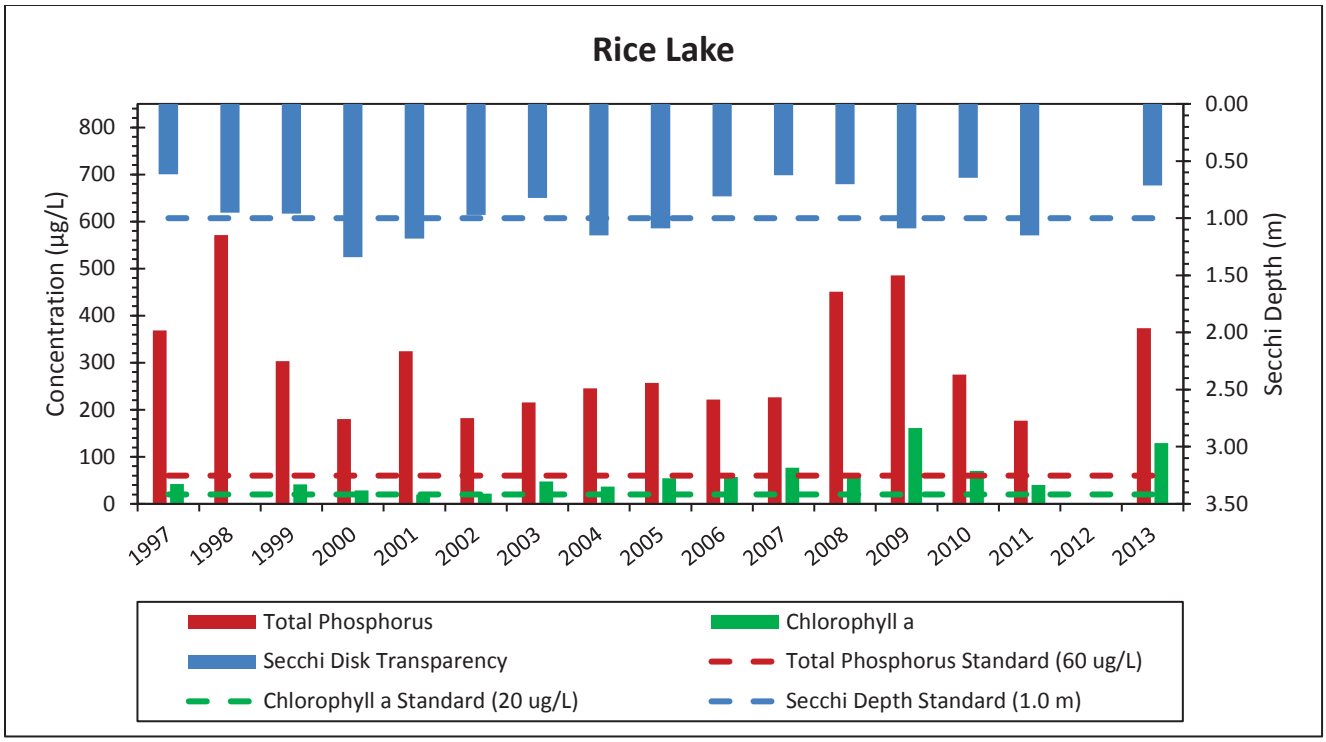

MPCA assessment period for listing determination 2000-2009.

Figure 6. Rice Lake Summer Average (June - September) Water Quality Data

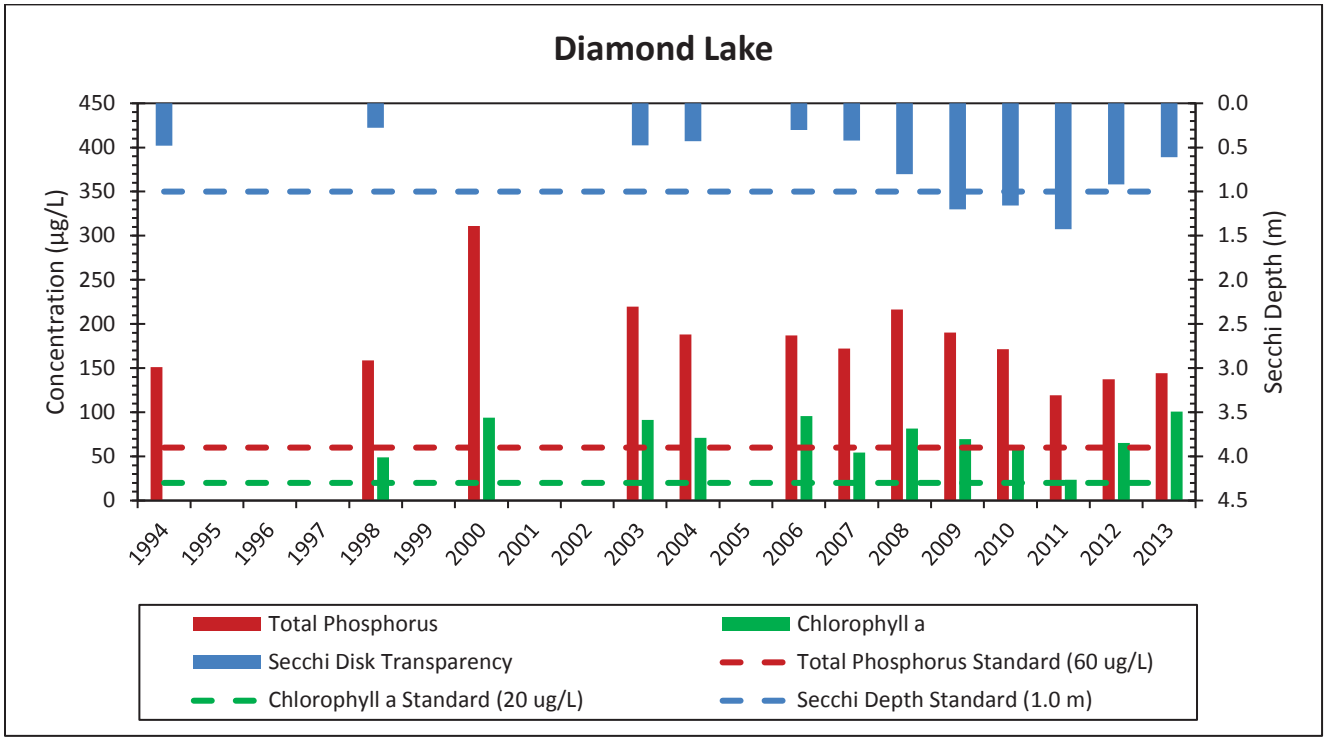

MPCA assessment period for listing determination 1996-2005.

Figure 7. Diamond Lake Summer Average (June - September) Water Quality Data

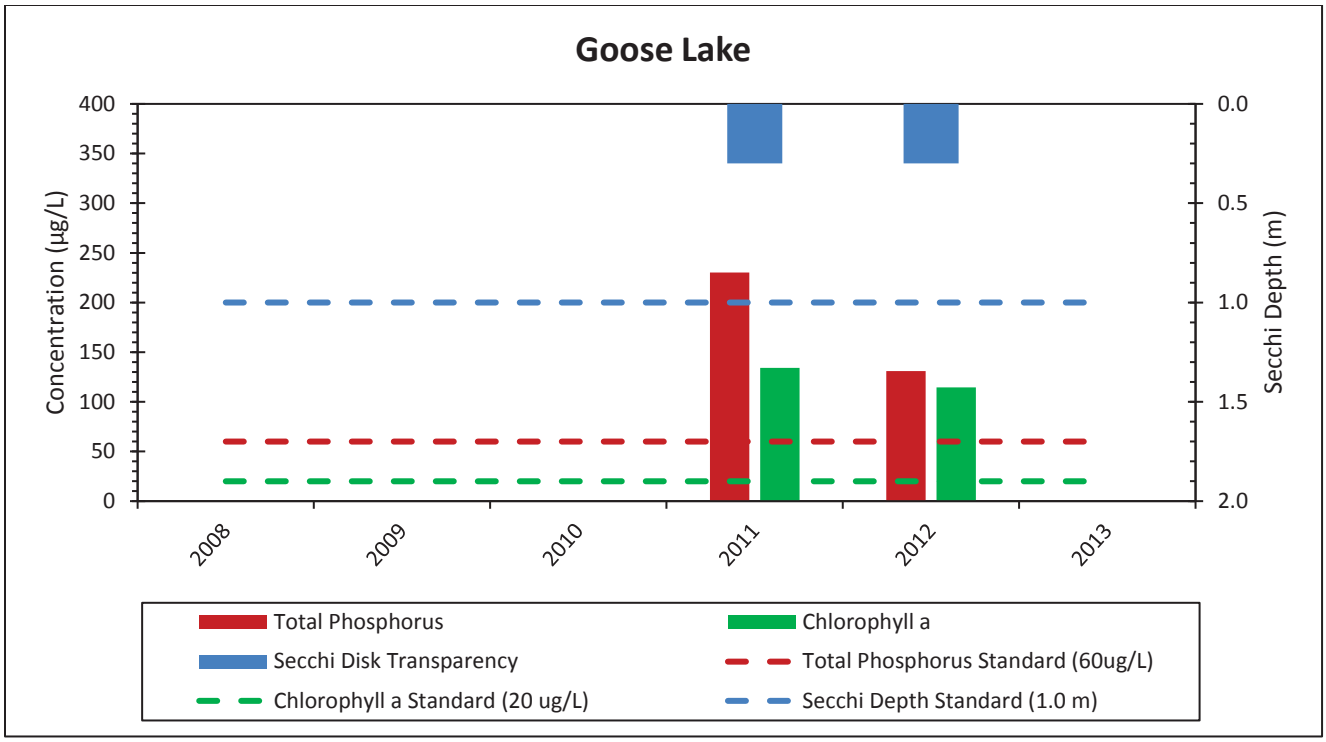

MPCA assessment period for listing determination 2006-2015.

Figure 8. Goose Lake Summer Average (June - September) Water Quality Data

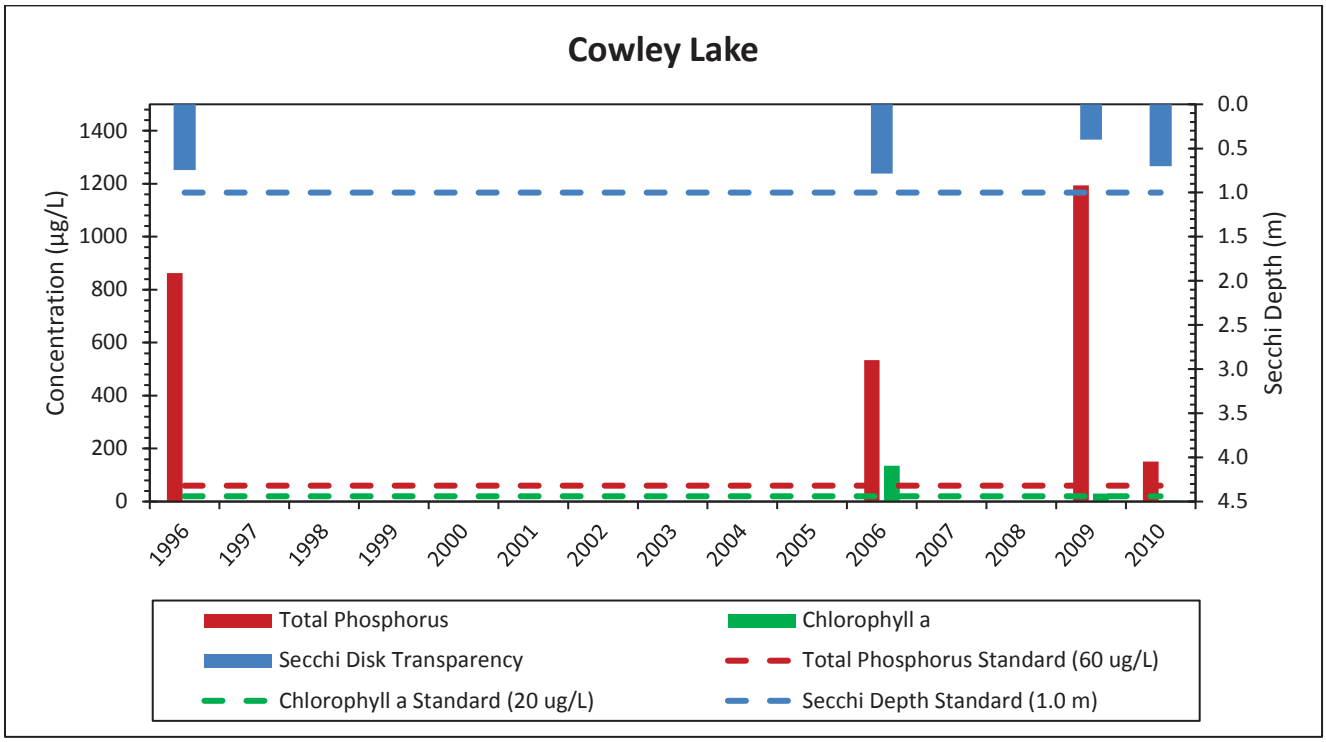

MPCA assessment period for listing determination 2000-2009.

Figure 9. Cowley Lake Summer Average (June - September) Water Quality Data

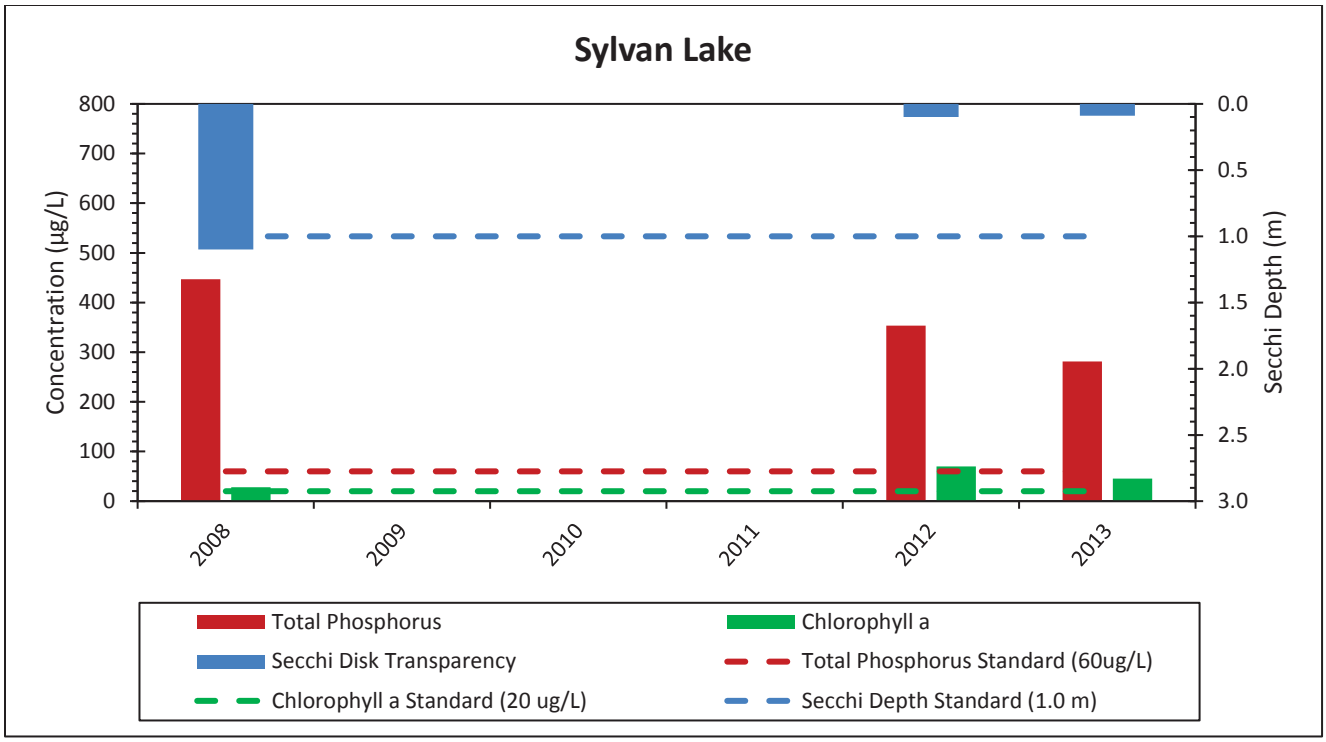

MPCA assessment period for listing determination 2006-2015.

Figure 10. Sylvan Lake Summer Average (June - September) Water Quality Data

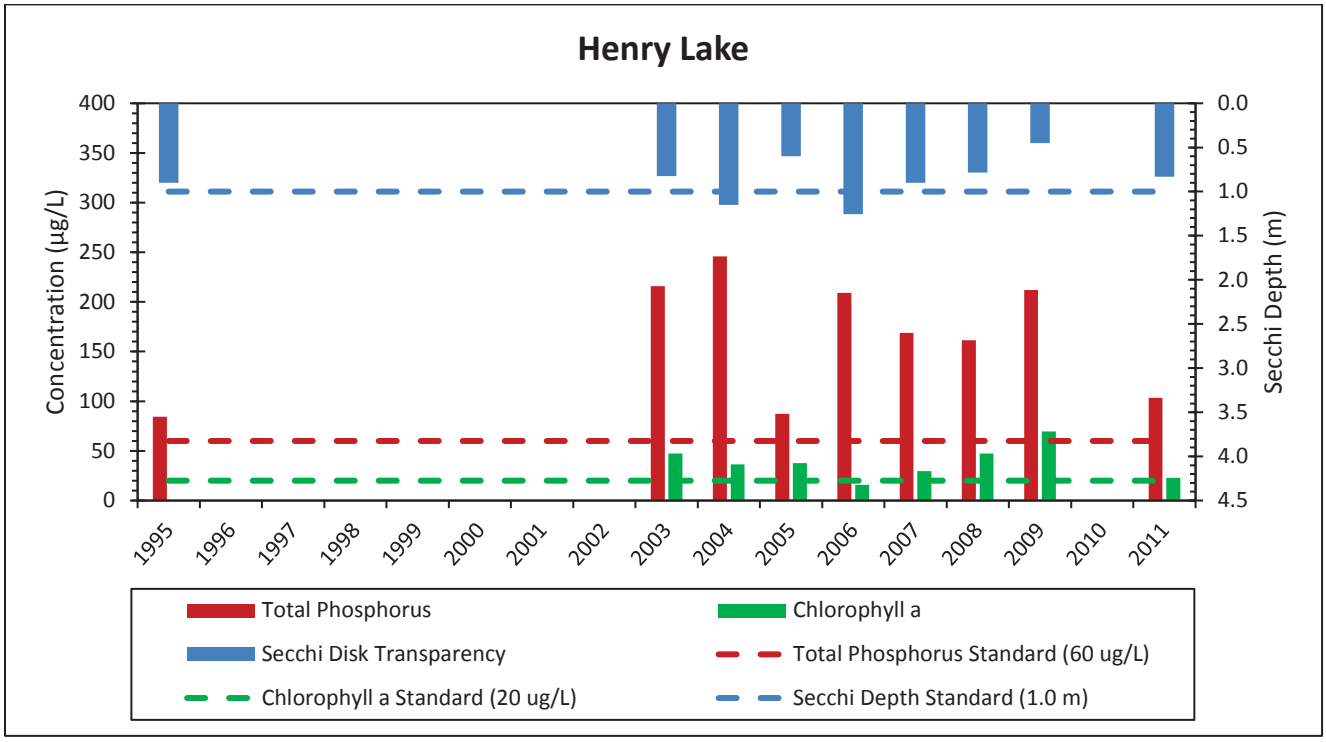

MPCA assessment period for listing determination 1998-2007.

Figure 11. Henry Lake Summer Average (June – September) Water Quality Data

Fish Lake is the only lake that has been consistently close to meeting in-lake water quality standards for all three parameters in the last 10 years, but especially since 2006. Of the remaining lakes, Diamond Lake appears to show a moderate improving trend in water quality, with data for 2011 showing that the lake met standards for the two "response" variables (Chl-*a* and Secchi disk transparency). Henry Lake also met water quality standards for the two response variables in 2006, and has been close in several other years since 2003. The Chl-*a* and Secchi disk transparency data for Rice Lake have been influenced by copper sulfate treatments in 2005, 2006, and 2007 to control nuisance algal blooms. Overall, most of the shallow lakes covered in this TMDL show elevated TP concentrations, while Chl-*a* and Secchi disk transparency are generally closer to meeting their respective standards.

Based on information in MPCA's Guidance Manual for Assessing the Quality of Minnesota Surface Waters for the Determination of Impairment: 305(b) Report and 303(d) List (2014), a finding that a lake is no longer impaired for nutrients starts with the following;

- there must be at least 8 paired TP, corrected chlorophyll a, and Secchi disk transparency measurement (June through September) over a minimum of 2 years for the most recent 10 years and;
- the data must show that TP and either corrected Chl-*a* or Secchi transparency meet their respective standards or;
- that TP exceeds the standard but both corrected chlorophyll a and Secchi disk transparency meet the standards. An improving trend in TP must also be in evidence or there must be documentation of management activities that are in place to maintain improved chlorophyll a or transparency conditions.

3.4.3 Low DO

Based on their classification as 2B waters, a concentration of 5 mg/l of DO as a daily minimum is the applicable standard for the three stream reaches in the Elm Creek Watershed that are listed as being impaired for low DO. Based on the MPCA's Guidance Manual for Assessing the Quality of Minnesota Surface Waters for the Determination of Impairment: 305(b) Report and 303(d) List (2014), a stream is considered impaired if:

1. more than 10% of the "suitable" readings (defined as being taken before 9 a.m. each day) between May and September, or more than 10% of the total data points taken between May and September, or;
2. more than 10% of the October through April measurements violate the standard and;
3. there are at least three violations and at least 20 independent observations

Table 7 and Table 8 summarize the information on the DO monitoring data collected at each monitoring site within each of the three stream reaches listed as impaired for low DO. Table 7 summarizes data generated by periodic instantaneous readings of DO during routine site visits, while Table 8 summarizes data taken by instruments (sondes) deployed in the field that generate a continuous record of DO at the site over weeks or months. Where multiple monitoring sites lie within a single impaired reach, the data is presented for those monitoring sites in upstream to downstream order. The information presented includes the site, the period of record for the data presented, the number of data points, and the number of data points with values less than 5 mg/l. Numbers in red indicate those sites where more

than 10% of the recorded data was below the 5 mg/l standard. The location of the monitoring stations is shown in Figure 3.

Table 7. Summary of DO Data for Impaired Stream Reaches (Grab Samples)

AUID 07010206 (Elm Creek)				
Site	**Storet ID**	**Years**	**Total Number of Samples**	**N (under 5.00 mg/L)**
Hamel	S004-545	2011 , 2012	46	17
ECER	S004-544	2011 , 2012	45	17
EC77	S004-543	2011 , 2012	50	9
ECW	S003-441	2011 , 2012	29	1
EC81	S005-338	2011 , 2012	50	4
USGS	S004-222	2011 , 2012	64	5
ECHO	S004-221	2011 , 2012	47	21
MPO	S005-818	2010-2013	61	16
AUID 07010206 (Rush Creek)				
Site	**Storet ID**	**Years**	**Total Number of Samples**	**N (under 5.00 mg/L)**
RCTH	S004-541	2011 , 2012	33	22
RC116	S004-540	2011 , 2012	33	20
RT	S004-539	2011 , 2012	38	21
AUID 07010206 (Diamond Creek)				
Site	**Storet ID**	**Years**	**Total Number of Samples**	**N (under 5.00 mg/L)**
DCZ	S004-536	2011 , 2012	34	19
SD	S004-537	2012	13	7
DC	S004-538	2007 , 2008 , 2011 , 2012	65	8

Notes: Values in red indicate violation of standard

Table 8. Summary of DO Data for Impaired Stream Reaches (Continuous Sondes)

AUID 07010206-508 (Elm Creek)					
Site	**Storet ID**	**Years**	**Total Number of Samples**	**Min D.O. N (under 5.00 mg/L)**	**Max D.O. N (under 5.00 mg/L)**
EC77	S004-543	2010 , 2011	317	161	75
EC81	S005-338	2010 , 2011	254	164	45
USGS	S004-222	2010 , 2011	142	35	8
ECHO	S004-221	2010 , 2011	253	244	142
AUID 07010206-528 (Rush Creek)					
Site	**Storet ID**	**Years**	**Total Number of Samples**	**Min D.O. N (under 5.00 mg/L)**	**Max D.O. N (under 5.00 mg/L)**
RT	S004-539	2010 , 2011	330	265	198
AUID 07010206-525 (Diamond Creek)					
Site	**Storet ID**	**Years**	**Total Number of Samples**	**Min D.O. N (under 5.00 mg/L)**	**Max D.O. N (under 5.00 mg/L)**
DC	S004-538	2010 , 2011	271	173	92

Notes: Values in red indicate violation of standard

The data suggest moderate to severe DO impairments throughout all three listed reaches, with the most severe impairments in Rush Creek where more than half of the data points collected showed a DO concentration lower than the 5 mg/l standard.

3.4.4 Biotic Integrity

Assessment of the aquatic community was done through the use of an IBI. An IBI integrates multiple features of the aquatic community to evaluate the overall health of the biological community. This approach functions on the theory that biological assemblages are a direct reflection of pollutants, habitat alteration, and hydrologic modification over time. For further information regarding the development of stream IBIs, refer to the MPCA's Guidance Manual for Assessing the Quality of Minnesota Surface Waters for the Determination of Impairment: 305(b) Report and 303(d) List (2014).

Table 9 shows the IBI scores used to evaluate multiple stream reaches within the Elm Creek Watershed for biotic impairment.

Table 9. Index of Biotic Integrity (IBI) Standards and Relevant Elm Creek Watershed Data by Stream Reach

Year	AUID Steam Reach[1]	Station ID	Location	Fish IBI		Macroinvertebrate IBI	
Rush Creek, South Fork				*Threshold*	*Score*	*Threshold*	*Score*
2010	-760	10UM014	Corcoran	40	0	46.8	37.9
2010	-760	10UM013	Corcoran	40	0	46.8	31.4
2010	-732	10UM011	Maple Grove	40	20	46.8	31.3
Rush Creek Mainstem							
2010	-528	99UM081	Maple Grove	40	26	46.8	42.6
Diamond Creek							
2010	-525	10UM008	Dayton	40	19	46.8	46.8
Elm Creek Mainstem							
2010	-508	10UM034	Hamel/Medina	50	0	46.8	32.9
2010	-508	10UM035	Maple Grove	50	3	46.8	45.6
2010	-508	10UM009	Maple Grove	50	19	46.8	29.0
2010	-508	10UM167	Dayton	50	24	46.8	45.1

[1] All AUIDs are in Hydrologic Unit Code (HUC) 07010206

These data suggest that all of the monitored stream reaches are impaired to some degree for both macroinvertebrate and fish communities, but that the degree of impairment of the fish community is high. The severity of the fish community impairment generally decreases in the Rush Creek and Elm Creek Subwatersheds as one moves from the upstream to downstream. The data indicate that the macroinvertebrate communities in the system are generally moderately to slightly impaired depending on location, and the degree of impairment doesn't show a pronounced trend from upstream to downstream.

3.5 Pollutant Source Summary

3.5.1 *E. coli* Bacteria

As outlined in Table 5, four stream reaches totaling over 48 stream miles, are listed as impaired for *E. coli* bacteria. Discharge from each of the streams eventually reaches the Mississippi River at Champlin, which is itself listed as impaired for *E. coli*. Bacteria loading can occur from both permitted and non-permitted sources.

3.5.1.1 Permitted Sources

Permitted sources of bacteria can include industrial stormwater effluent, municipal and industrial wastewater treatment facility (WWTF) effluent, Concentrated Animal Feeding Operations (CAFOs), and municipal stormwater runoff. A review of the MPCA permit information for the watersheds draining to each of the impaired reaches indicate there are no CAFOs currently, nor are there any permitted industrial dischargers with direct discharges to surface water operating in the watersheds. There is one permitted domestic wastewater discharger—Maple Hill Estates-located in Corcoran and discharging to the South Fork-Rush Creek. This facility (Permit MN0031127) serves a 189-unit mobile home park and has a continuous discharge averaging 0.03 million gallons per day (mgd) to a 1.08-acre impoundment, which in turn discharges to a wetland that is tributary to the South Fork of Rush Creek.

Municipal stormwater runoff can also contain *E. coli* bacteria, primarily as a result of improperly disposed of fecal matter from domestic animals (i.e. dogs and cats) that is carried in runoff to the storm water conveyance system. Urban wildlife can also contribute *E. coli* to the stormwater system, either via overland runoff from areas where they concentrate or via direct deposit in the storm sewer pipes (generally small mammals) or receiving water (usually waterfowl). There are nine jurisdictions within the Elm Creek Watershed project area that are permitted municipal separate storm sewer systems (MS4s) in the watershed. Table 10 shows these jurisdictions and their MS4 Permit numbers.

Table 10. Permitted MS4s in the Elm Creek Watershed Project Area

Permitted MS4	Permit ID Number
City of Champlin	MS400008
City of Corcoran	MS400081
City of Dayton	MS400083
Hennepin County	MS400138
City of Maple Grove	MS400102
City of Medina	MS400105
MnDOT Metro District	MS400170
City of Plymouth	MS400112
City of Rogers	Future MS4[1]

[1] Coverage under current MS4 permit expected by December 2016

3.5.1.2 Non-Permitted Sources

Non-permitted sources include livestock, wildlife, and failing septic systems. Loadings from livestock can occur from feedlots and/or land areas where manure has been applied for disposal and crop nutrient management purposes. Delivery of the associated bacteria load is usually a result of precipitation runoff events that provide the transport mechanism to move the bacteria to a conveyance system or receiving water. In addition, livestock with direct access to receiving waters or the conveyance systems that feed them can deliver bacteria loads in the absence of runoff-driven processes. Failing or non-conforming Individual Sewage Treatment Systems (ISTSs) can also be a source of *E. coli* to streams, especially during dry periods when these sources continue to discharge and runoff-driven processes are not occurring. The most recent information available for subsurface sewage treatment systems failure rates in Hennepin County is from 2009 and suggests that about 29% of the systems then in operation were failing (MPCA 2011).

3.5.1.3 Estimate of *E. coli* Produced

Figure 12 through Figure 15 show the estimated number of *E. coli* bacteria produced by major source category within the subwatersheds of the four *E. coli*-impaired stream reaches. The livestock component of this analysis is based on a livestock inventory of the watershed for 2011 that involved a detailed examination of high resolution pictometry from Hennepin County. The results of the inventory are summarized in Appendix A. The pictometry facilitated an estimate of livestock numbers, type, and location. Human population and household information was derived from the 2010 census, while estimates of wildlife numbers and type were based on the professional judgment of Minnesota Department of Natural Resources (DNR) and Three Rivers Park District wildlife managers.

Based on the results of the various surveys and the production estimate, it appears that fecal matter from livestock is the primary potential source of bacteria loading. Livestock were by far the largest producers of bacteria in the Diamond Creek, Rush Creek, and South Fork-Rush Creek Subwatersheds. They were still the dominant producer in the Elm Creek Subwatershed as well, though urban sources were estimated to constitute about one third of the bacteria generated. The worksheets showing how the bacteria production estimates were calculated are in Appendix B and graphical summaries of the results are presented in the following figures.

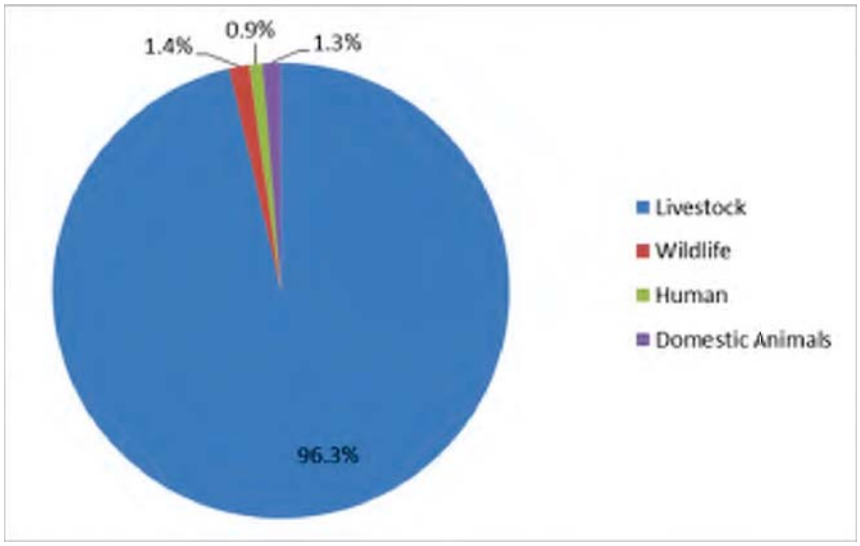

Figure 12. *E. coli* Bacteria produced and available within the South Fork, Rush Creek Subwatershed

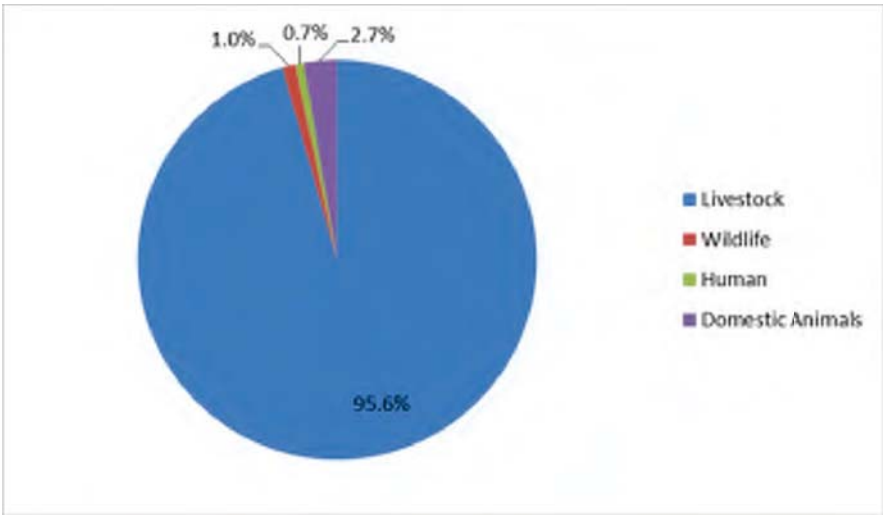

Figure 13. ***E. coli*** **bacteria produced and available within the Rush Creek Subwatershed**

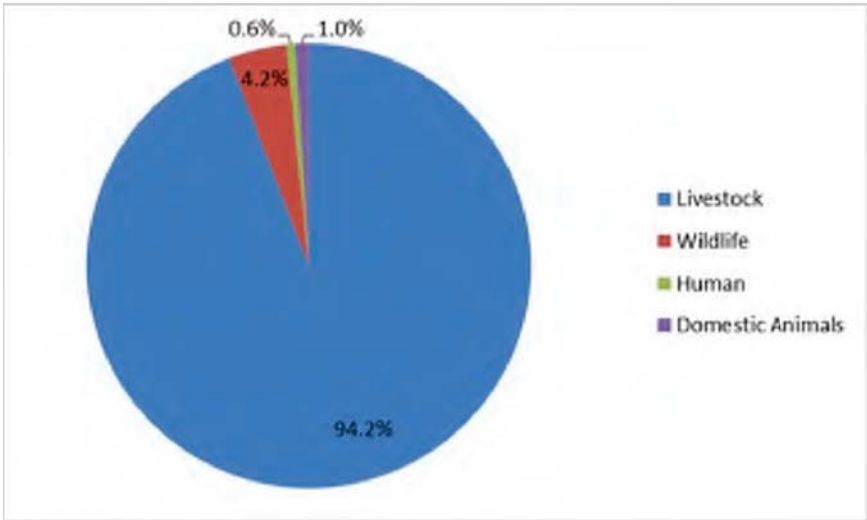

Figure 14. ***E. coli*** **bacteria produced and available within the Diamond Creek Subwatershed**

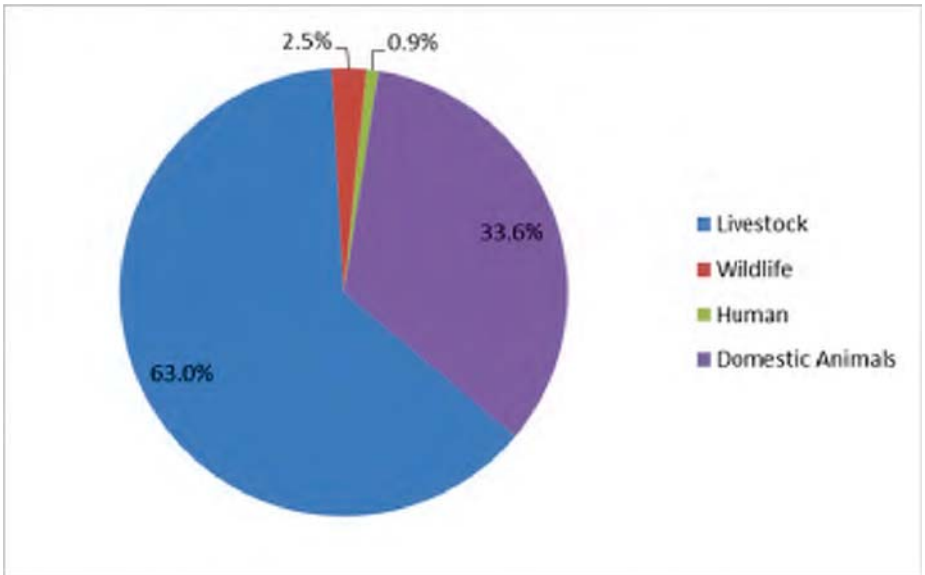

Figure 15. ***E. coli*** **bacteria produced and available within the Elm Creek Subwatershed**

3.5.2 Lake Nutrients

There are seven lakes impaired for nutrients that are addressed in this TMDL report. Excess plant nutrients, mainly nitrogen and phosphorus, from human-driven activities contribute to excess productivity in lakes. Excess productivity manifests itself as an increase in algal blooms and a consequent decrease in water clarity, both of which may significantly impair or prohibit the use of lakes for aquatic recreation. In Minnesota, the primary focus in managing nutrient enrichment of lakes has been to emphasize the control of phosphorus because of its role as a limiting nutrient in lake productivity.

There are three primary sources of phosphorus loading to lakes; watershed (external) loading, internal loading, and atmospheric deposition. Each is described in more detail below to address both permitted and non-permitted sources.

3.5.2.1 Watershed Loading

Watershed loading refers to phosphorus carried from the land draining to receiving water and transported by runoff processes. Both permitted and non-permitted sources of watershed loading are present within the Elm Creek Watershed. Permitted sources for the impaired lakes in this watershed include primarily discharges from storm water runoff. There are no municipal wastewater treatments plants, combined sewer overflows, sanitary sewer overflows, or confined animal feeding operations CAFOs present in the lake watersheds of the TMDL study area.

Regulated MS4s and Wastewater Treatment Facilities

All of the communities within the TMDL project area are (or, in the case of the city of Rogers, soon will be) permitted MS4s, and the area of each community served by a regulated MS4 conveyance systems varies widely.

identifies the current and pending permitted MS4 entities in the watershed. The MS4 conveyance system provides the mechanism to transport vegetative material (such as grass clippings, leaves, and seeds), dust and dirt, car wash wastewater, improperly disposed of pet waste, and other phosphorus-containing material to receiving water.

The only WWTF in the project area watershed is the Maple Hills Estates facility in Corcoran. The facility is described in Section 3.5.1.1. The effluent discharged from the facility does not affect any of the seven impaired lakes in this report.

Construction Stormwater

Construction stormwater permits are required for any construction activities that disturb:

1. One acre or more of soil
2. Less than one acre of soil if that activity is part of a “larger common plan of development or sale”, or
3. Less than one acre of soil, but the MPCA determines that the activity poses a risk to water resources

Phosphorus loading from construction sites is mostly associated with movement of soil off the site due to erosion.

Industrial Stormwater

Industrial stormwater discharge permits are required for facilities with Standard Industrial Classification codes in 10 categories of industrial activity with significant materials and activities exposed to

stormwater. These include any material handled, used, processed, or generated that when exposed to stormwater may leak, leach, or decompose and are carried off-site.

Non-permitted

Finally, there are watershed loads that are non-permitted. These loads generally include runoff-driven loads from land – in most cases rural – that does not pass through a regulated MS4 conveyance system. Examples include nutrients from manure, eroded soil, and other material that may be deposited in, or conveyed to, receiving water without entering a regulated MS4 conveyance system.

3.5.2.2 Internal Loading

Internal nutrient loading in a lake is usually the result of enriched bottom sediments releasing phosphorus into the water column. In most cases, lakes retain a large percentage of the pollutant load that is discharged to them. Much of the incoming phosphorus to a lake can end up in its bottom sediments, and a percentage of this accumulated phosphorus can be available for release. The actual amount released depends on a number of factors, including the magnitude of past phosphorus loading to the lake, the type and degree of enrichment of the sediments, the lake's bathymetric (depth) profile, and the area of and length of time a lake's bottom sediments are exposed to low or no oxygen conditions. In areas where human disturbance of the contributing watershed has been on-going for decades or longer due and/or there have been historic wastewater discharges, internal release of phosphorus can be a major component of the overall phosphorus load affecting the quality of a lake. It should be noted that the overabundance of carp or other roughfish as well as some invasive aquatic plants (notably curly leaf pond weed) can also contribute to the internal phosphorus. Internal loading is typically designated as a non-permitted source in any lake TMDL.

3.5.2.3 Atmospheric Deposition

Precipitation and dry fall (i.e. dust particles suspended by wind) that fall directly on a lake surface contribute phosphorus to the lake's overall load. Like internal loading, phosphorus loading associated with atmospheric deposition is also considered a non-permitted source.

3.5.3 Low DO

Oxygen depletion in streams commonly occurs from the presence and subsequent breakdown of organic matter within the system. The breakdown process, facilitated by bacteria and other micro-organisms, consumes oxygen. Loading of biochemical oxygen demanding (BOD) substances can be from both "natural" and human-caused sources. Natural sources of BOD include plant decay, leaf fall and decomposition, and, at times, wetlands. Algal growth is commonly identified as a significant source of BOD in watersheds with elevated nutrient levels. The most common human-related inputs are those associated with effluent from WWTFs. The MS4s can also discharge oxygen-depleting organic matter in the form of grass clippings, leaves, and pet waste. Organic matter from livestock and other agricultural operations is also another potential source. Generally, discharges from WWTFs and designated municipal separate stormwater systems are permitted sources, while those associated with natural sources and most agricultural operations are non-permitted sources. It is important to note that while there are numerous agricultural feedlot operations in the Elm Creek Watershed project area, there are no CAFOs. Permitted WWTFs and permitted MS4 systems in the project area are described in Section 3.5.1.

A more detailed summary of conditions that can also cause low DO levels is presented below.

3.5.3.1 Nutrients, Eutrophication, and Plants

High in-stream nutrient concentrations often lead to eutrophication, characterized by accelerated primary production in the form of plants. The plants affected can be rooted aquatic plants, free-floating algae suspended in the water column (especially in low gradient, slow-moving streams), periphyton (which are plants attached to substrate that does not wash away, such as rocks, logs, etc.), or some combination of the three. The plants cause high oxygen levels during sunlit daylight hours when they are photosynthesizing and producing oxygen. During the night, when there is no sunlight to support photosynthesis, oxygen levels are driven down since plants respire and consume oxygen. Often the lowest levels of oxygen in this type of system occur early in the morning. In addition, when plants die, microorganisms that facilitate the decomposition process consume DO while at the same time releasing nutrients back into the water column.

3.5.3.2 Shallow Impoundments

Shallow impoundments, including wetlands, on streams or rivers can have a great influence on downstream DO. Often, impoundments raise the temperature of the water during the warm months of the year, and warmer water cannot hold as much oxygen as cooler water. In addition, shallow impoundments slow flows resulting in deposition and accumulation of organic and finer sediment particles which often exert an elevated demand for oxygen. Finally, shallow impoundments/wetlands on nutrient-rich streams can support extensive submergent and emergent aquatic plant communities as well as periphyton, and/or planktonic algal communities. The same eutrophication-driven processes described in the preceding section can be exacerbated and exert an even more profound effect on downstream DO levels.

3.5.3.3 Other Conditions Causing Low DO

Other conditions which can cause low DO include:

- Water Column Biochemical Oxygen Depletion. The oxygen-demanding substances referred to earlier in this section are usually comprised of two primary components; nitrogenous biochemical oxygen demand (NBOD) and carbonaceous biochemical oxygen demand (CBOD). The NBOD is the biologic oxidation of ammonia to nitrate. The CBOD is the oxidation through decomposition of organic carbon to carbon dioxide through the metabolic action of micro-organisms. Carbonaceous demand is usually exerted first, normally as a result of a lag in the growth of the nitrifying bacteria necessary for oxidation of the nitrogen forms.
- Sediment Oxygen Demand. Another factor influencing oxygen concentrations in streams is sediment oxygen demand (SOD). The SOD is the aerobic decomposition of organic materials (including animal waste and decaying plant material) that settle to the bottom of the stream and become incorporated into the streams sediments. In natural, free-flowing streams, the SOD is usually negligible because frequent scouring as a result of runoff events prevents long-term accumulation of organic materials.
- Water Temperature/Groundwater Inflow. All other factors being equal, streams with cooler temperatures have higher DO content than streams with warmer water temperatures. This is because oxygen is more soluble in cooler water than warmer water. Streams with a strong baseflow driven by cool groundwater (GW) inputs can support higher DO levels during the summer because GW temperatures are generally significantly lower than normal surface water

temperatures. However, GW itself often has low DO (sometimes close to zero), and therefore can exert a negative impact on stream DO concentrations unless opportunities exist re-aerate the cool water discharge from the GW system.

- Canopy Cover and Water Temperature. Canopy coverage may also have an effect on stream DO content. Decreased shading leads to more sunlight exposure which often warms the water and in turn decreases the amount of oxygen the water can hold. Shading plays a bigger role in governing the temperature of small streams like those in the Elm Creek Watershed than it does in larger rivers, where even robust shoreline vegetation can only shade a very small percentage of the river's surface.
- Stream Geomorphology. The ability of streams to take in oxygen from the atmosphere is often highest in rocky bottomed streams with swift moving, agitated waters. Thus, changes to stream morphology such as smoothing of the stream bottom, deepening/widening of the channel, impoundments and flow-through wetlands, etc. can greatly affect re-aeration and DO concentrations. During periods of very low flow, there is often limited low-flow channel meandering across the streambed. If this occurs in summer when water temperatures may be high already, exposed sediments, shallow stagnant pools, and excessive aquatic plant/algae growth can all exacerbate oxygen depletion.

3.5.4 Biotic Impairments

Potential sources causing biotic impairments are numerous and varied. The EPA has produced guidance documents that provide a methodology for identifying and evaluating those factors (known as stressors) (EPA 2000). Stressors generally fall into two broad categories; pollutant stressors and non-pollutant stressors. This project involved carrying out a stream-lined process based on the MPCA SID Framework and the EPA's Causal Analysis/ Diagnoses Decision Information System (CADDIS) to identify the main stressors causing impairment of the fish and macroinvertebrate communities in five stream reaches of the Elm Creek Watershed. CADDIS, a methodology for conducting a stepwise analysis of candidate causes of impairment, characterizes the potential relationships between candidate causes and stressors, and identifies the probable stressors based on the strength of evidence from available data. The methodology and findings of that effort, including the sources of the stressors evaluated, are presented in the Elm Creek Stressor Identification Report (Lehr 2015).

Potential candidate causes of the biological impairments that were either ruled out or inconclusive based on review of available data include: nitrates; pH; temperature; un-ionized ammonia; and chloride. Water quality sampling for each of these parameters showed respective measurements either within Minnesota standards or a lack of biological response. The TP, excess sediment (TSS), altered hydrology, altered habitat, and low DO were all found to be stressors to aquatic life to varying degrees. A summary of evidence for each of these is provided in Table 23 and Table 24. As a result of the SI process, the TP was found to be a primary stressor in all five listed stream reaches and the TSS was found to be a primary stressor in two of the five reaches. More detailed information can be found in the Elm Creek Stressor Identification Report and section 4.3 of this report. Please refer to The Elm Creek Stressor Identification Report for locations of biological monitoring stations.

4 TMDL Development

A TMDL is defined as the total amount of a given pollutant that can enter a waterbody while still achieving water quality standards. The total allowable load, or TMDL, is allocated to the various sources contributing the pollutant as well as a margin of safety (MOS) and, in general, a RC. The TMDL equation can be written as:

$$\mathbf{TMDL = LC = \sum WLA + \sum LA + MOS + RC}$$

Where:

Loading capacity (LC): the greatest pollutant load a waterbody can receive without violating water quality standards;

Wasteload Allocation(WLA): the pollutant load that is allocated to point sources, including WWTFs and regulated stormwater; all covered under National Pollutant Discharge Elimination System (NPDES) permits for a current or future permitted pollutant source;

Load Allocation (LA): the pollutant load that is allocated to source not requiring NPDES permit coverage, including non-regulated stormwater runoff;

Margin of Safety (MOS): an accounting of uncertainty about the relationship between pollutant load and receiving water quality;

Reserve Capacity (RC): the portion of the loading capacity attributed to the growth of existing and future load sources.

This section presents TMDLs for *E. coli*, Lake Nutrients, and stressors identified as primary stressors (including low DO) for biotic impairments in the ECWMC.

4.1 *Escherichia Coli*

The following sections describe the approach used to develop the various components of the TMDL for the *E. coli* impairments in the five listed stream reaches of the Elm Creek Watershed.

4.1.1 Loading Capacity

Flow and LDCs were used to define the loading capacity for *E. coli* for each of the four listed reaches and to help characterize the pattern of exceedances. For each reach, a flow duration curve was developed using daily flow data collected between 2003 and 2012 during the April through October period at the most downstream location in the listed reach. Figure 16 shows the location of each impaired reach and the stream monitoring stations along those reaches. The flow stations used for generating the curves were as follows:

- Station RCSL for Rush Creek, South Fork (AUID 07010206-732)
- Station RT for Rush Creek mainstem (AUID 07010206-528)
- Station DC for Diamond Creek (AUID 07010206-525)
- Station USGS for Elm Creek (AUID 07010206-508)

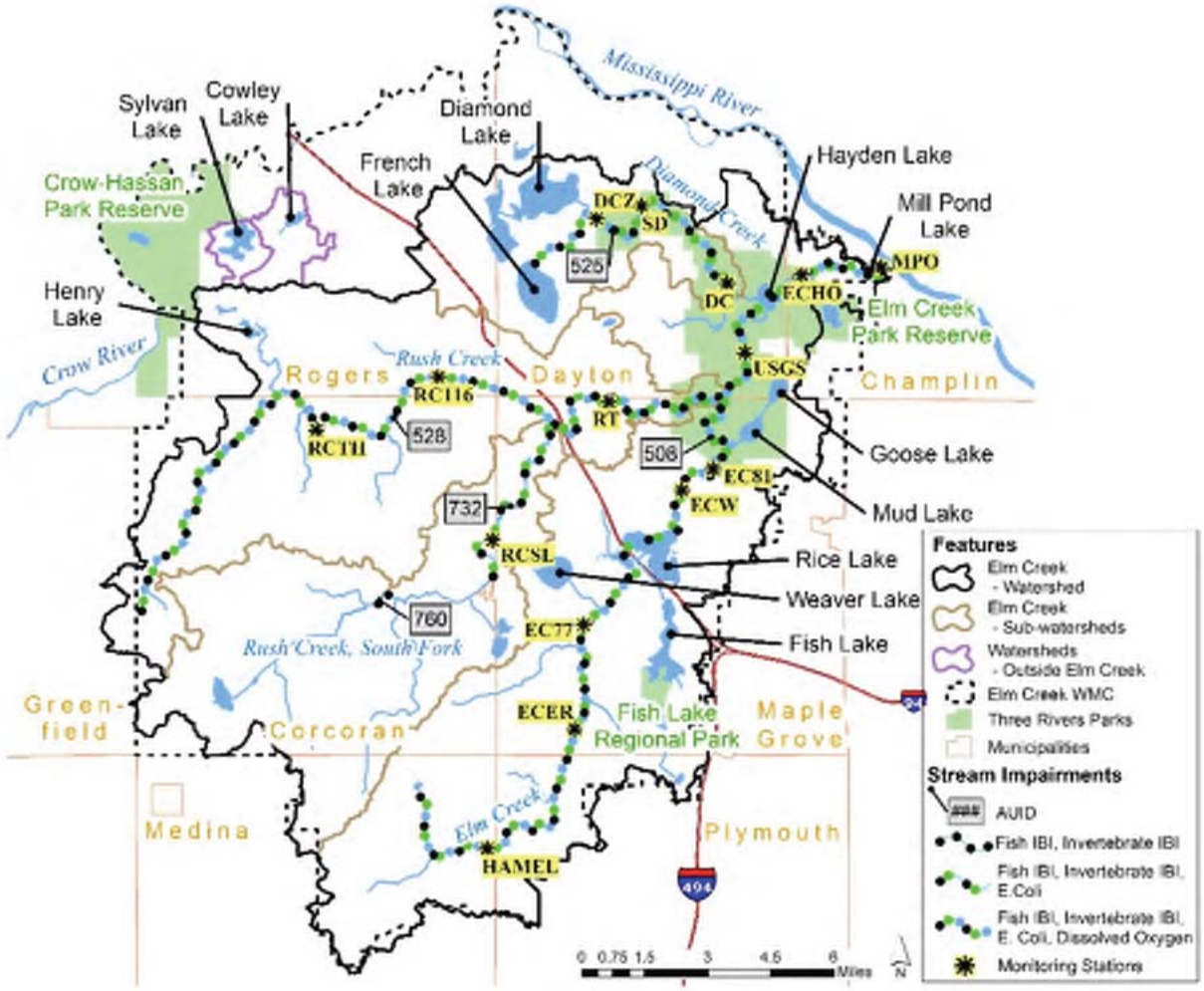

Figure 16. Stream Monitoring Sites and Impaired Reaches

Since not all of the flow data at the selected monitoring stations covered a full 10-year period of record, a simulated daily flow record was developed to cover the missing period of record. This involved developing a regression equation based on the overlapping period of record between the U.S. Geological Survey's (USGS) monitoring station on lower Elm Creek and the period of record for daily flows at the monitoring site on each reach. This relationship was used to simulate the daily flows for the missing period of record during 2003 through 2012. The daily flows at each station in the impaired reach were then adjusted again to account for the increased contributing watershed area between the location of the monitoring site and the bottom of the impaired reach. The resulting flow duration curves for each reach of the four impaired reaches are presented in Figure 17. The curved line relates mean daily flow to the percent of time those values are exceeded. For example, at the 20% exceedance value for the Diamond Creek reach, the average daily streamflow of 10 cfs was exceeded 80% of the time for the 10- year period of record. The 50% exceedance is also the mid-point or median flow value for the bottom of each reach. The flow duration curve is then divided into flow zones including very high (0% to 10%), high (10% to 40%), mid (40% to 60%), low (60% to 90%), and dry (90% to 100%) exceedance flow conditions. Subdividing all flow data over the 10-year period of record into these five categories ensures the full range of potentially critical conditions are accounted for in this TMDL study.

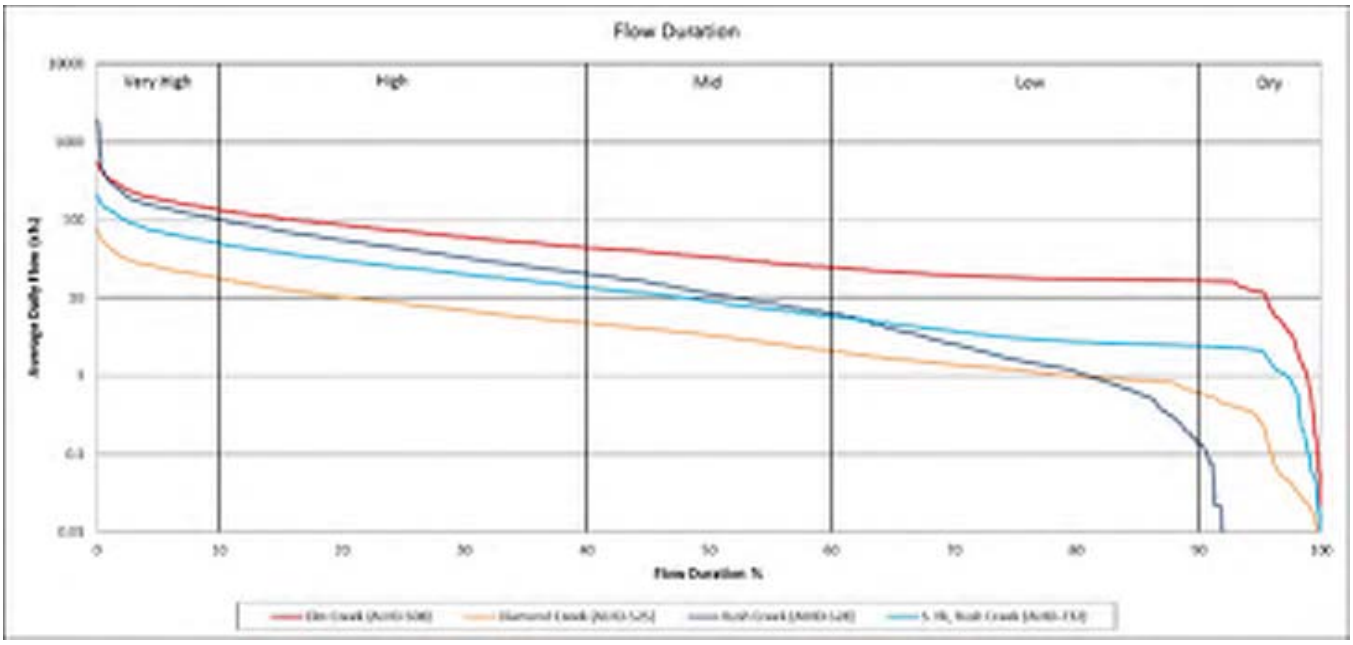

Figure 17. Flow Duration Curves by Impaired Reach

To develop the LDC for each reach, all daily average flows were multiplied by the *E. coli* standard of 126 cfu/100 ml and converted to a daily load to create a continuous LDC representing the loading capacity of the stream. The loading capacity can then be compared with current conditions by plotting the measured load for each water quality sampling event. The values above the curve are those which exceed the standard, while those below the LDC line are below the standard.

The LDCs and measured load data for the listed reaches are presented in Figure 21. Note that at the top of each graph the percent reductions needed to meet the standard in that flow regime is shown. It should also be noted that only concentration data from stations showing exceedances of the chronic standard for one or more months during the period 2003 through 2012 were used in calculating the actual loads. This means that *E. coli* data for monitoring stations ECW, USGS, ECHO, and MPO at the lower end of Elm Creek are not included in the Elm Creek (AUID – 508) LDC.

Note: The blue line represents the maximum allowable daily *E. coli* load

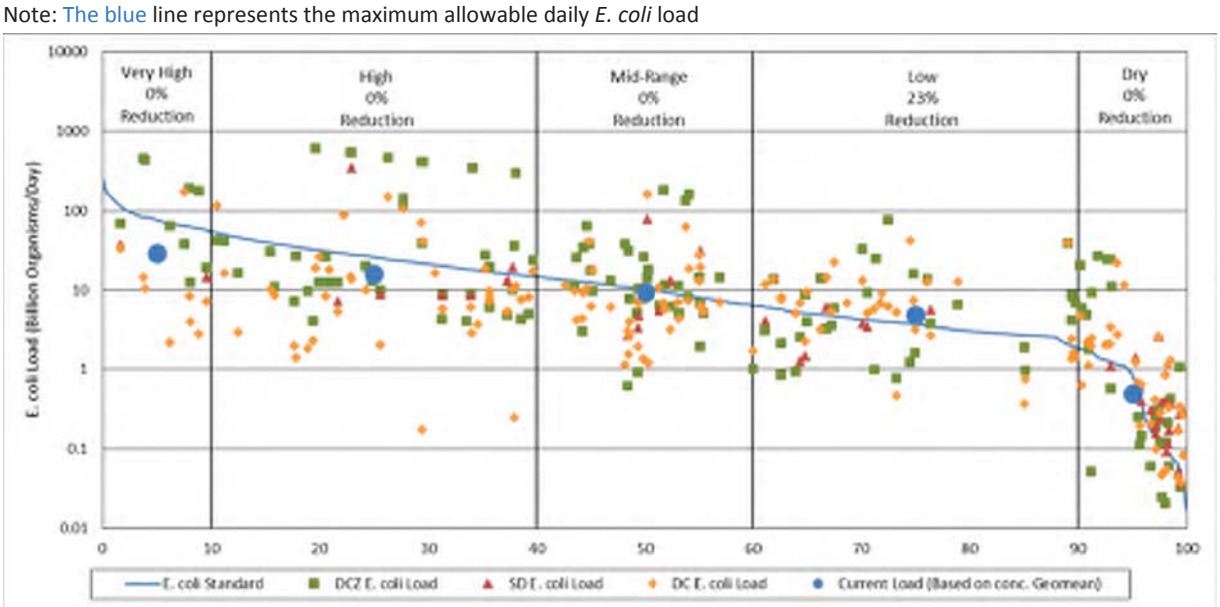

Figure 18. Diamond Creek (AUID - 525) *E. coli* LDC and Required Load Reductions by Flow Regime

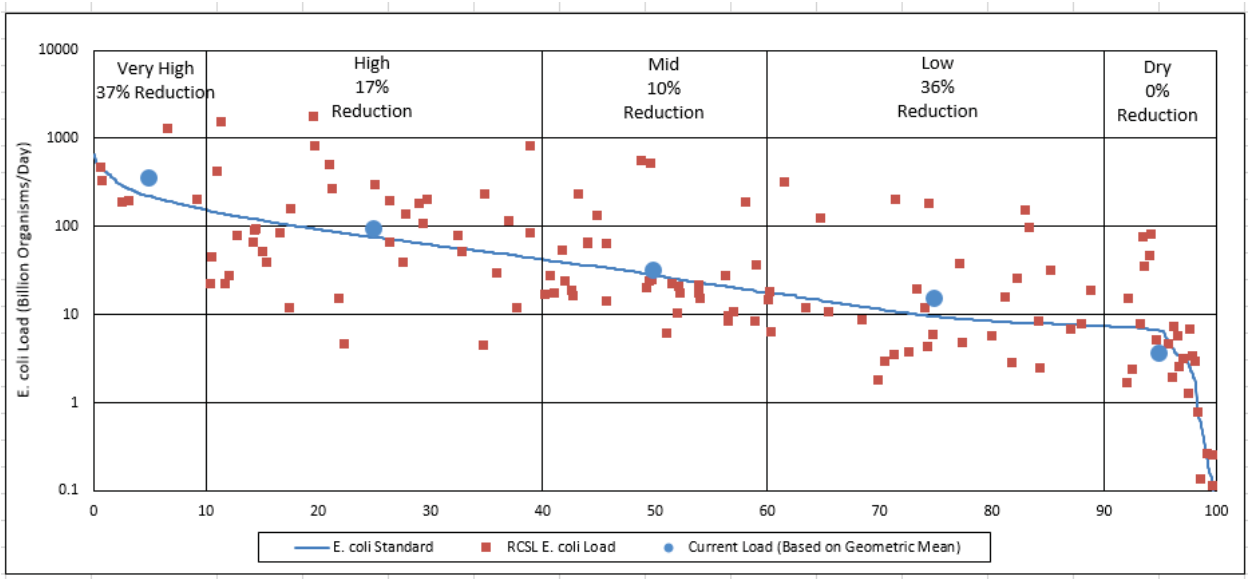

Figure 19. Rush Creek-South Fork (AUID - 732) *E. coli* LDC and Required Load Reductions by Flow Regime

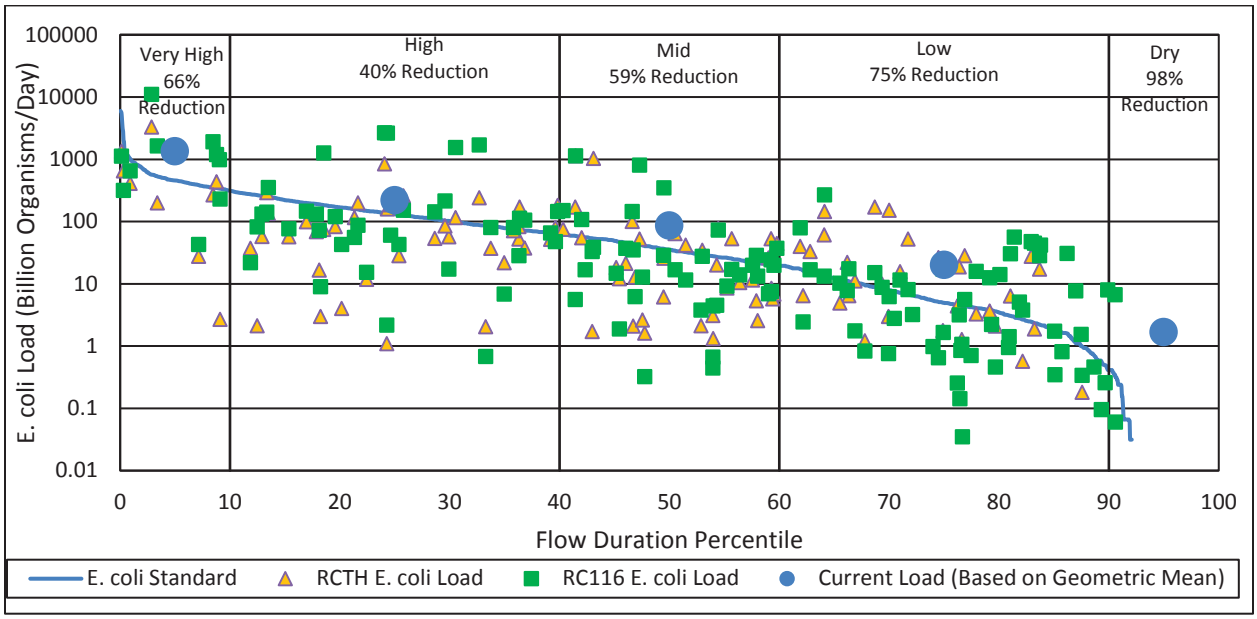

Figure 20. Rush Creek Mainstem (AUID - 528) *E. coli* LDC and Required Load Reductions by Flow Regime

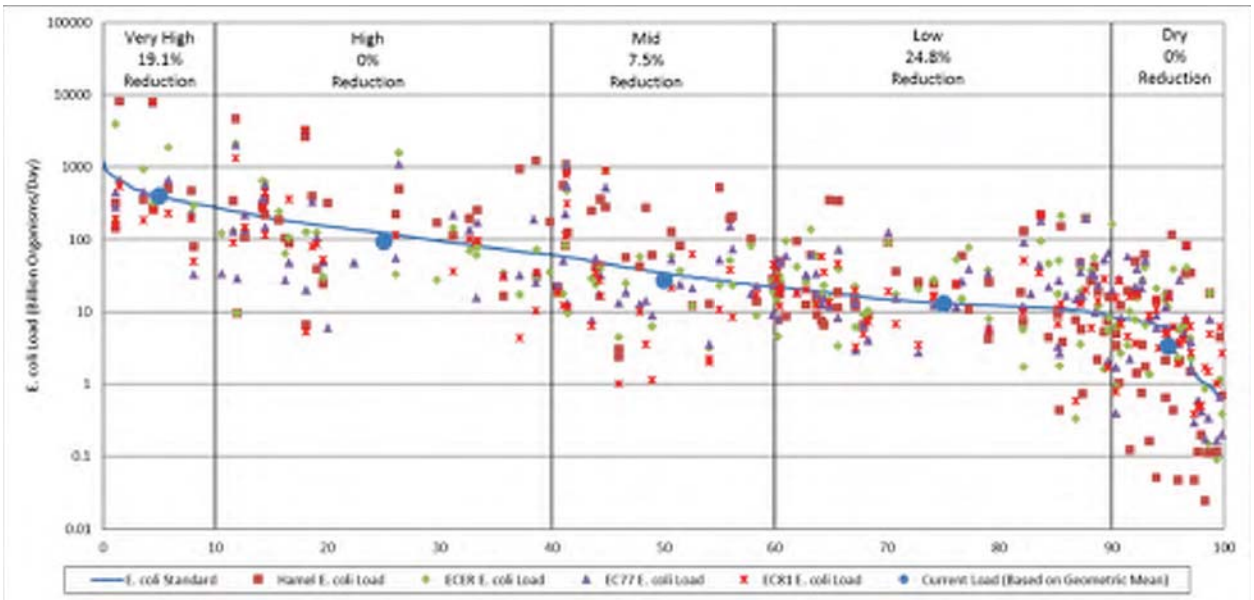

Figure 21. Elm Creek (AUID - 508) *E. coli* LDC and Required Load Reductions by Flow Regime

The LDC method is based on an analysis that encompasses the cumulative frequency of historic flow data over a specified period. Because this method uses a long-term record of daily flow volumes, virtually the full spectrum of allowable loading capacities is represented by the resulting curve. In the TMDL equation tables that are presented later in this report (Section 4.1.7), only five points on the entire loading capacity curve are depicted (the midpoints of the designated flow zones). However, it should be understood that the entire curve represents the TMDL and is what is ultimately approved by the EPA.

4.1.2 Wasteload Allocation Methodology

The WLAs for these bacteria TMDLs have been allocated between the permitted sources. There is currently one active permitted NPDES wastewater discharger in the watershed, Maple Hills Estate in the city of Corcoran, which discharges wastewater that reaches the South Fork of Rush Creek. In addition, six local communities within the Elm Creek Watershed are permitted to discharge stormwater from their regulated conveyance systems under the Phase II MS4 Permit. The seventh, the city of Rogers, has been notified that it will be permitted as a regulated MS4, likely by late 2016. Finally, there are two road authorities – the Minnesota Department of Transportation (MnDOT) and Hennepin County, which are also permitted to discharge stormwater from their stormwater conveyance systems to the subwatersheds of impaired reaches.

Figure 22 summarizes the methodology used in this TMDL for determining which areas within a community or road authority jurisdiction were included in the WLA. Using the screening process outlined in Figure 22 and consistent with direction from the Technical Advisory Committee for the project, each WLA assigned was proportionate to the acreage of that jurisdiction within the subwatershed of the affected impaired reach.

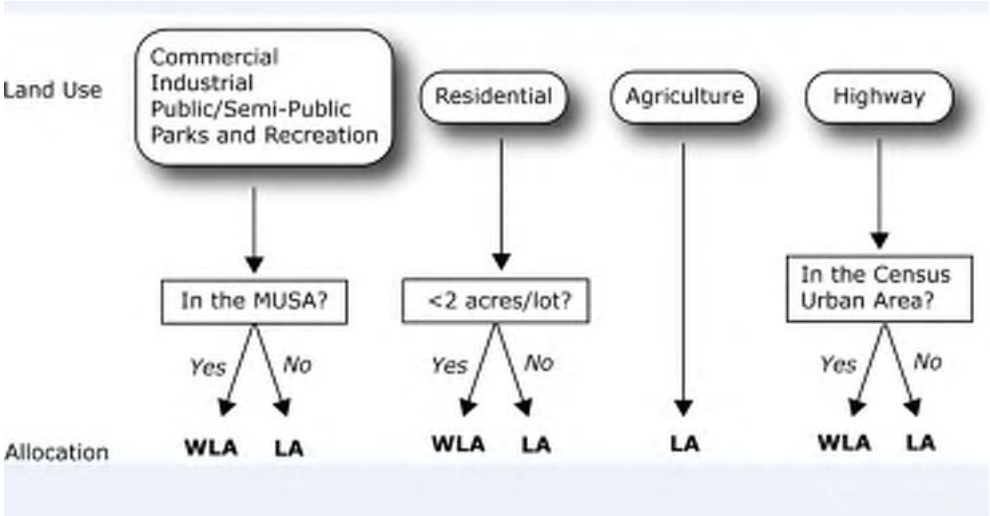

Figure 22. Schematic Representation of Allocation Methodology

4.1.3 Load Allocation Methodology

The non-point source (NPS) allocation also referred to as the watershed LA, is the remaining load after the MOS (see Section 4.1.4) and WLAs are subtracted from the total load capacity for each flow zone. The watershed LA includes all non-permitted sources such as outflow from lakes and wetlands in the watershed, and runoff from agricultural land, forested land, and non-regulated MS4 residential areas.

4.1.4 Margin of Safety

The MOS accounts for uncertainties in both characterizing current conditions and the relationship between the load, wasteload, monitored flow, and in-stream conditions. The purpose of the MOS is to account for uncertainty so the TMDL allocations result in attainment of water quality standards. An explicit MOS equal to 5% of the load capacity was applied, meaning that 5% of the loading capacity was subtracted from the loading capacity for each flow regime before allocations were made among wasteload and NPSs. Five percent was considered an appropriate MOS since the LDC approach minimizes a great deal of uncertainty associated with development of the TMDLs, given that the calculation of the loading capacity is simply a function of flow multiplied by the target value. Most of the uncertainty is associated with the estimated flows in each assessed reach. For this TMDL, extensive continuous flow data was collected over a four to six-year period in at least one location within each impaired reach. Overlapping periods of record with the a long-term USGS gaging station on lower Elm Creek (35+ year period of record) were used to simulate a 10-year flow record at the bottom of each reach to provide the basis for development of the LDCs. Thus, this component of uncertainty was fairly well controlled.

4.1.5 Seasonal Variation

Seasonal variability was addressed through collection and analysis of data across the entire April through October recreation period to which the standard applies. Further, the data collection period for each impaired reach ranged from four to six years, providing the opportunity to characterize exceedances under a variety of weather and flow patterns. The data analysis approach used (calculation of geomeans for each month as well as plotting of data using flow duration curves customized for each

reach) allowed an evaluation of variability in exceedances across individual months as well as across flow regimes.

4.1.6 Future Growth Consideration/Reserve Capacity

4.1.6.1 New or Expanding Permitted MS4 WLA Transfer Process

Future transfer of watershed runoff loads in this TMDL may be necessary if any of the following scenarios occur within the project watershed boundaries:

1. New development occurs within a regulated MS4. Newly developed areas that are not already included in the WLA must be transferred from the LA to the WLA to account for the growth.
2. One regulated MS4 acquires land from another regulated MS4. Examples include annexation or highway expansions. In these cases, the transfer is a WLA to a WLA.
3. One or more non-regulated MS4s become regulated. If this has not been accounted for in the WLA, then a transfer must occur from the LA.
4. Expansion of a U.S. Census Bureau Urban Area encompasses new regulated areas for existing permittees. An example is existing state highways that were outside an Urban Area at the time the TMDL was completed, but are now inside a newly expanded Urban Area. This will require either a WLA to WLA transfer or a LA to WLA transfer.
5. A new MS4 or other stormwater-related point source is identified and is covered under a NPDES Permit. In this situation, a transfer must occur from the LA.

Load transfers will be based on methods consistent with those used in setting the allocations in this TMDL, i.e. loads will be transferred on a simple land area basis. In cases where WLA is transferred from or to a regulated MS4, the permittees will be notified of the transfer and have an opportunity to comment.

4.1.6.2 New or Expanding Wastewater

The MPCA, in coordination with the EPA Region 5, has developed a streamlined process for setting or revising the WLAs for new or expanding wastewater discharges to waterbodies with an EPA approved TMDL (MPCA 2012). This procedure will be used to update the WLAs in approved TMDLs for new or expanding wastewater dischargers whose permitted effluent limits are at or below the instream target and will ensure that the effluent concentrations will not exceed applicable water quality standards or surrogate measures. The process for modifying any and all WLAs will be handled by the MPCA, with input and involvement by the EPA, once a permit request or reissuance is submitted. The overall process will use the permitting public notice process to allow for the public and the EPA to comment on the permit changes based on the proposed WLA modification(s). Once any comments or concerns are addressed, and the MPCA determines that the new or expanded wastewater discharge is consistent with the applicable water quality standards, the permit will be issued and any updates to the TMDL WLA(s) will be made. For more information on the overall process visit the MPCA's TMDL Policy and Guidance webpage.

4.1.7 TMDL Summary

Table 11 to Table 16 presents the total loading capacity, MOS, WLAs, and remaining watershed LAs for the four *E. coli*-impaired reaches.

Table 11. Diamond Creek (AUID - 525) *E. coli* TMDL and Allocations by Flow Zone

Diamond Creek: AUID 07010206-525		Flow Zones				
		Very High	High	Mid	Low	Dry
		E. coli Load (Billions of Organisms/Day)				
WLAs	Total WLA	36.09	12.38	4.81	1.75	0.37
	MS4-Dayton	36.09	12.38	4.81	1.75	0.37
LAs	Total Load Allocations	36.67	12.58	4.88	1.78	0.38
	Non-MS4 runoff	36.67	12.58	4.88	1.78	0.38
5% Explicit Margin of Safety (MOS)		3.83	1.31	0.51	0.19	0.04
Total Load (TMDL)		76.59	26.28	10.20	3.71	0.80
Existing Load		29.23	16.14	9.46	4.81	0.5
Estimated Reduction (%)		0	0	0	23	0

Table 12. Rush Creek - South Fork (AUID - 732) *E. coli* TMDL and Allocations by Flow Zone

Rush Creek - South Fork: AUID 07010206-732		Flow Zones				
		Very High	High	Mid	Low	Dry
		E. coli Load (Billions of Organisms/Day)				
WLAs	Total WLA	109.96	37.68	13.98	4.82	3.28
	Maple Hills Estates WWTF	0.14	0.14	0.14	0.14	0.14
	MS4 - Corcoran	72.43	24.76	9.13	3.09	2.08
	MS4 - Maple Grove	23.63	8.08	2.98	1.01	0.68
	MS4 - Medina	13.41	4.58	1.69	0.57	0.38
	MS4 - Hennepin County	0.36	0.12	0.04	0.01	.005
LAs	Total Load Allocations	98.50	33.67	12.42	4.20	2.83
	Non MS4 runoff	98.50	33.67	12.42	4.20	2.83
5% Explicit Margin of Safety (MOS)		10.97	3.76	1.39	0.47	0.32
Total Load (TMDL)		219.44	75.11	27.80	9.49	6.44
Existing Load		348.96	90.43	30.73	14.83	3.47
Estimated Reduction (%)		37	17	10	36	0

Table 13. Rush Creek Mainstem (AUID - 528) E. coli TMDL and Allocations by Flow Zone

Rush Creek Mainstem: AUID 07010206-528		Flow Zones				
		Very High	High	Mid	Low	Dry
		E. coli Load (Billions of Organisms/Day)				
WLAs	Total WLA	164.88	47.67	12.72	1.88	0.03
	Permitted Point Source Dischargers	0.14	0.14	0.14	0.14	**
	MS4 - Corcoran	43.33	12.50	3.31	0.46	**
	MS4 - Dayton	42.93	12.38	3.28	0.45	**
	MS4 - Maple Grove	29.29	8.45	2.24	0.31	**
	MS4 - Rogers	47.66	13.75	3.64	0.50	**
	MS4 - Hennepin County	0.42	0.12	0.03	0.00	**
	MS4 - MnDOT	1.11	0.32	0.08	0.01	**
LAs	Total Load Allocations	269.25	77.68	20.56	2.84	**
	Non MS4 runoff					
5% Explicit Margin of Safety (MOS)		22.85	6.60	1.75	0.25	0.00

Total Load (TMDL)	**456.98**	**131.94**	**35.03**	**4.96**	**0.03**
Existing Load	**1335.54**	**219.97**	**85.96**	**19.98**	**1.68**
Estimated Reduction (%)	**66**	**40**	**59**	**75**	**98**

** Allocation = flow contribution from a given source x 126 cfu *E. coli*/100 ml

Table 14. Elm Creek (AUID - 508) E. coli TMDL and Allocations by Flow Zone

Elm Creek: AUID 07010206-508		**Flow Zones**				
		Very High	**High**	**Mid**	**Low**	**Dry**
		***E. coli* Load (Billions of Organisms/Day)**				
WLAs	**Total WLA**	**305.29**	**95.46**	**26.24**	**10.20**	**4.75**
	Permitted Point Source Dischargers	**0.14**	**0.14**	**0.14**	**0.14**	**0.14**
	MS4 - Champlin	**18.23**	**5.70**	**1.56**	**0.60**	**0.28**
	MS4 - Corcoran	**15.32**	**4.78**	**1.31**	**0.51**	**0.23**
	MS4 - Dayton	**54.54**	**17.04**	**4.67**	**1.80**	**0.82**
	MS4 - Maple Grove	**141.94**	**44.34**	**12.14**	**4.68**	**2.14**
	MS4 - Medina	**32.97**	**10.30**	**2.82**	**1.09**	**0.50**
	MS4 - Plymouth	**32.17**	**10.05**	**2.75**	**1.06**	**0.49**
	MS4 - Hennepin County	**3.52**	**1.10**	**0.30**	**0.12**	**0.05**
	MS4 - MnDOT	**6.46**	**2.02**	**0.55**	**0.21**	**0.10**
LAs	**Total Load Allocations**	**71.47**	**22.33**	**6.11**	**2.36**	**1.08**
	Non MS4 runoff	**71.47**	**22.33**	**6.11**	**2.36**	**1.08**
5% Explicit Margin of Safety (MOS)		**19.83**	**6.20**	**1.70**	**0.66**	**0.31**
Total Load (TMDL)		**396.59**	**123.99**	**34.06**	**13.22**	**6.13**
Existing Load		**490.11**	**120.79**	**36.82**	**17.57**	**3.74**
Estimated Reduction (%)		**19**	**0**	**8**	**25**	**0**

The total daily loading capacity (TDLC) in the “dry” flow zone for the Rush Creek mainstem (

Table 15 above) is very low due to the occurrence of very low flows in the flow record. Consequently, the permitted wastewater treatment design flows will exceed the stream flow in this flow zone. This means that the WWTF discharge would exceed the available loading capacity, based on the method described here to calculate the TMDL components. To account for this unique situation, the WLAs and LAs for this flow regime are expressed as an equation. The equation is:

Allocation = flow contribution from a given source x 126 cfu *E. coli*/100 ml

This approach effectively assigns a concentration-based limit to all discharges for the “dry” flow zone. Since there will be essentially no runoff in this flow zone anyway, permitted and non-permitted stormwater discharges should be essentially unaffected. The impact will be on any WWTF discharges from the Maple Hills Estates Facility.

To provide additional guidance for the magnitude of reductions required to meet the bacteria standard in each of the reaches, another analysis was prepared and is presented below. **Error! Reference source not found.** shows the percent reduction in the monthly geomean *E. coli* concentration values needed to reach the standard for each month by monitoring station within each impaired reach. The location of the monitoring stations is show in Figure 3, and the monitoring station information in Table 15 is

presented in upstream to downstream order for each stream reach. The table cells are color-coded to help identify the magnitude of reductions required (red for large reductions to yellow for small reductions and white for no reductions). For Elm Creek, it is important to note that MS4 communities discharging to Elm Creek below monitoring station EC81 (i.e. the cities of Champlin and Dayton) have no reduction obligation, since monitoring data at the USGS, ECHO, and MPO sites in the lower end of the listed reach show no violation of water quality standards for *E. coli*. Similarly, the MS4's discharging below the confluence of the South Fork, Rush Creek (AUID -732) and mainstem of Rush Creek (i.e. portions of the cities of Maple Grove and Dayton as well as MnDOT right-of-way associated with Interstate 94) have no reduction obligations, since monitoring data at Site RT at the lower end of the Rush Creek mainstem reach (AUID -528) shows no violation of water quality standards for *E. coli*. As shown in the tables, the exceedances of the *E. coli* standard are most frequent and severe in the upper reaches of the watershed, which are currently dominated by rural and agricultural uses.

Table 15. Percent Reduction of *E. coli* Monthly Geomeans to Achieve Standard by Impaired Reach

***E. coli* Monthly Geomeans (cfu/100mL) - % Reductions to Meet Chronic Standard**							
	April	**May**	**June**	**July**	**August**	**September**	**October**
Diamond Creek: Headwaters/French Lake to Un-named Lake (AUID 07010206-525)							
DCZ	0	0	0	44%	66%	7%	15%
SD		0	31%	6%	28%	42%	0
DC	0	0	0	0	41%	37%	24%
Rush Creek, South Fork: Un-named lake to Rush Creek (AUID 07010206-732)							
RCSL	0	0	2%	16%	11%	59%	63%
Rush Creek: Headwaters to Elm Creek (AUID 07010206-528)							
RCTH	0	0	0	32%	57%	0	0
RC116	0	0	17%	47%	38%	0	0
RT	0	0	0	0	0	0	0
Elm Creek: Headwaters/Lake Medina to Miss. R. (AUID 07010206-508)							
Hamel	0%	11%	52%	24%	30%	0%	2%
ECER	0%	0%	32%	7%	43%	28%	24%
EC77	0%	0%	20%	49%	39%	46%	0%
ECW	0%	0%	0%	0%	0%	0%	0%
EC81	0%	0%	5%	12%	31%	36%	0%
USGS	0%	0%	0%	0%	0%	0%	0%
ECHO	0%	0%	0%	0%	0%	0%	0%
MP	0%	0%	0%	0%	0%	0%	0%

4.2 Lake Nutrients

4.2.1 Loading Capacity Methodology

The initial step in developing an excess nutrient TMDL for lakes is to determine the total nutrient loading capacity for the lake, defined as the maximum nutrient load it can receive and still meet water quality standards. To determine the loading capacity for a lake, the average annual nutrient and water budgets were coupled with a lake response model to calibrate to a monitored in-lake condition for a specified time period (generally a one to three-year time period and always within the 10-year period between 2003 and 2012). Where monitored watershed loads were available, that data was either used directly in the estimation of total watershed loads or a watershed model was calibrated to the monitored loads.

Once a lake-specific calibrated model was developed, it was used to define a load response curve that reflected the relationship between total nutrient loading (regardless of source) and in-lake water quality. The curve was used to determine the total load required to meet the June-September in-lake phosphorus standard for that lake (60 ug/l for a shallow lake and 40 ug/l for a deep lake). The total load required to achieve the in-lake water quality goal was established as the loading capacity for that lake.

Appendix C- Modeling Methods, Input, and Output for Lakes (including Lake Bathymetry), Appendix D – Elm Creek Watershed SWAT Technical Memo, Appendix E-Bathymetric and Vegetation Surveys for Lakes, and Appendix F – Internal Phosphorus Loading and Sediment Phosphorus Fractionation all provide detailed information on the technical methods and information used to develop TMDLs for the lakes addressed in this report.

4.2.2 Wasteload Allocation Methodology

The WLAs for lakes are typically divided into three categories: NPDES surface wastewater discharges, construction and industrial stormwater, and Municipal Storm Sewer Systems (MS4). The only NPDES surface wastewater discharge in the entire project area is from the Maple Hill Estates mobile home park in Corcoran, which discharges to the South Fork of Rush Creek. The discharge does not reach any of the impaired lakes addressed in this report, however, and therefore is not included in any of the allocation tables for lake TMDLs. To account for construction activity and possible industrial stormwater in the watersheds of the impaired lakes as well as future growth in the watersheds, WLAs equal to 1.0% of the loading capacity for each lake were assigned to cover both these categories, based on guidance from the MPCA staff. All of the municipalities in the watershed are, or soon will be, permitted MS4s, as are two road authorities (the MnDOT and Hennepin County).

Figure 23 summarizes the methodology used in the lakes TMDLs for determining the areas within a community or road authority were included in the wasteload allocation. Using the screening process outlined in Figure 23, each wasteload allocation assigned was proportionate to the acreage of that jurisdiction within the subwatershed of a give impaired lake.

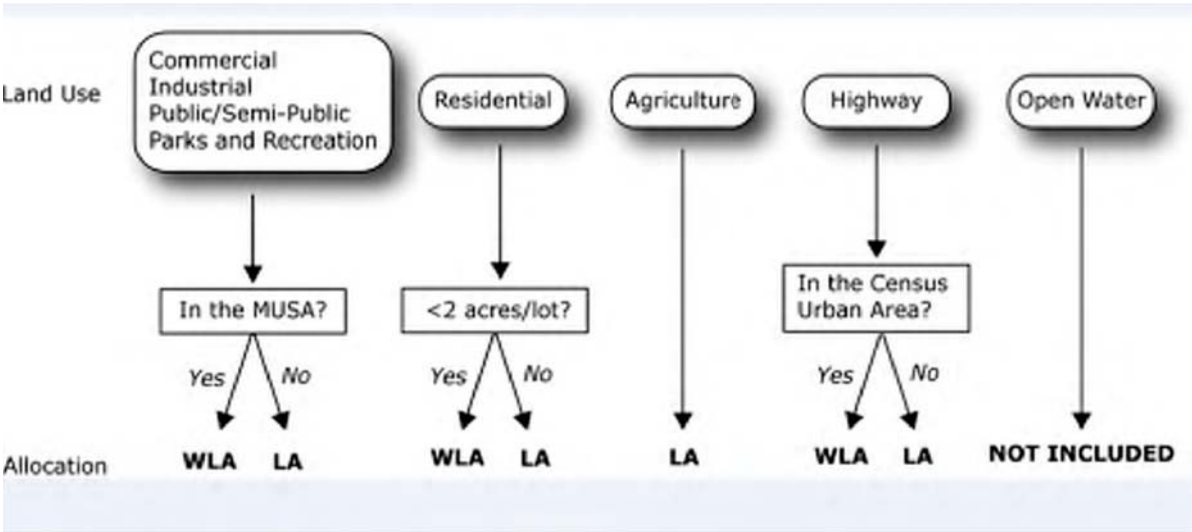

[1] "Open water" refers to the area of the lake for which the allocations are prepared

Figure 23. Schematic Representation of Allocation Methodology[1]

4.2.3 Load Allocation Methodology

The LAs for the lake TMDLs includes atmospheric and internal loading from release of phosphorus by lake bottom sediments, curly leaf pondweed (CLPW) senescence, etc. Also included are watershed loads from areas identified in the comprehensive land use plans for each community that are expected to develop after 2030 or are not expected to be within the MUSA. Existing and future residential development where lots are two acres or greater (generally considered rural residential) are not expected to be served by a regulated conveyance system, and thus are included under the LA. Finally, all the areas owned by the two road authorities -Hennepin County and MnDOT- that are outside the 2010 urban service are included under the LA.

4.2.4 Margin of Safety

The MOS is intended to ensure achievement of the water quality goals despite scientific uncertainty. Most lakes addressed in this TMDL have a robust data set including in-lake monitoring over multiple years and at a frequency of bi-weekly to monthly. In addition, there are over a dozen tributary monitoring sites that were used to estimate loads from particular land use types, and several lakes (notably Fish, Rice, and Diamond) have lab measured internal phosphorus release rates (RRs). An explicit margin of 5% of the loading capacity has been set aside in each lake TMDL. The 5% MOS was considered adequate given each lake's reasonably robust data set and the lake response model performance.

4.2.5 Seasonal Variation and Critical Conditions

Seasonal variation was taken into account in the TMDL by using the eutrophication standards, which are based on growing season averages as the TMDL goals. The eutrophication standards were set with seasonal variability in mind. The load reductions are established so that the receiving water will meet the water quality standard over the course of the growing season (June through September).

Critical conditions in the impaired lakes occur during the growing season when the lakes are used most intensively for direct and indirect contact aquatic recreation. Since the TMDL is based on growing season averages, the critical period is covered by the TMDL.

4.2.6 Future Growth/Reserve Capacity

See Section 4.1.6

4.2.7 TMDL Summary

Numerical TMDL's for each lake were calculated as the sum of the WLA, the LA, and the MOS expressed as a phosphorus mass per unit time. Table 16 to Table 22 present the TMDL equations for each lake. Annual LAs were rounded to the nearest tenth of a pound, while daily LAs were rounded to the nearest thousandth of a pound. The sections below summarize the primary findings applicable to the existing conditions and management of each lake as it pertains to achieving the applicable in-lake water quality standard. The TMDL for each lake is them presented in tabular form, including the loading capacity of the lake and the reductions in nutrient loading needed by permitted or non-permitted source to reach the in-lake standard.

4.2.7.1 Fish Lake

Key findings pertaining to Fish Lake are as follows:

- Fish Lake is approximately 238 acres in surface area and has a maximum depth of 60 feet. About 39% of the lake is less than 15 feet deep. Fish Lake is the only lake classified as a **deep lake** in this TMDL. Recent water quality data indicate it is very close to meeting the eutrophication standard for deep lakes.
- The lake's watershed is fully urbanized, primarily with single family residential and park land uses, and has virtually no vacant land available to support new development. Further, soils in the watershed are generally not conducive to infiltration practices.
- Based in part on incubation of sediment cores and estimation of phosphorus RRs under both anoxic and oxic conditions, about 70% of the phosphorus load affecting surface water quality in the lake comes from internal sources, while about 27% comes from watershed sources.
- Both CLPW and common carp are present in the lake but at non-nuisance levels. Only 39% of the lake's area is littoral (i.e. less than 15 feet deep), which limits somewhat the potential negative impact these invasive species are likely to have on water quality in this system.

To meet the TMDL, a net reduction in TP load affecting Fish Lake of 206.7 lbs/yr. will be needed, equal to a 9.1% reduction of the current total load of 2,262.2 lbs/yr. However, the gross reduction from all sources must include the MOS as well, and therefore is 206.7 lbs/yr. + 102.8 = 309.5 lbs/yr. This load reduction can be achieved through internal load reductions of 19.6%.

Table 16 presents the phosphorus TMDL and allocations for Fish Lake.

Table 16. Fish Lake Phosphorus TMDL and Allocations

Fish Lake TMDL Summary (AUID 27-0118)		**Existing TP Load[1]**	**TP Allocations**		**Load Reduction**	
		lbs./yr.	lbs./yr.	lbs./day	lbs./yr.	%
TOTAL LOAD/LOADING CAPACITY		2262.2	2055.5	5.632	206.7	9.1%
5% EXPLICIT MOS		0.0	102.8	0.282	102.8	4.5%
TOTAL REDUCTION					***309.5***	***13.7%***
WLAs	Construction/Industrial Stormwater	20.6	20.6	0.056	0.0	0.0%
	Maple Grove MS4	551.7	551.7	1.511	0.0	0.0%
	Plymouth MS4	37.6	37.6	0.103	0.0	0.0%
	Hennepin County MS4	8.2	8.2	0.022	0.0	0.0%
	MnDOT MS4	3.7	3.7	0.010	0.0	0.0%
LAs	Atmospheric Deposition	63.5	63.5	0.174	0.0	0.0%
	Internal Load	1577.0	1267.5	3.473	309.5	19.6%

[1] Existing TP load is the average for the years 2010 - 2012.

4.2.7.2 Rice Lake

Key findings pertaining to Rice Lake are as follows:

- Rice Lake is approximately 330 acres in surface area. It has a maximum depth of 11 feet and is classified as a **shallow lake**. The lake is a shallow reservoir/impoundment on the mainstem of Elm Creek and has a contributing watershed area of over 17,460 acres.
- Recent water quality data indicates the lake is severely degraded.
- Both CLPW and common carp are present in the lake at nuisance levels.
- About 25% of the phosphorus load affecting surface water quality in the lake comes from internal sources, while about 74% comes from watershed sources. Release of phosphorus by bottom sediments is the largest source of internal loading, followed by growth and senescence of CLPW.

To meet the TMDL, a net reduction in TP load affecting Rice Lake of 10,325.6lbs/yr will be needed, equal to an 81.7% reduction of the current total load of 12,632.7 lbs/year. However, the gross reduction from all sources must include the MOS as well, and therefore is 10,325.6 lbs/yr + 115.4 = 10,441.0 lbs/yr It is not possible to meet the TMDL through watershed load reductions alone (i.e. the sum of the existing loads from atmospheric deposition and internal loading exceed the total loading capacity for Rice Lake). Therefore, a combination of watershed load reduction and internal load reduction will be necessary to meet the TMDL. The total load reduction needed can be achieved through:

- Watershed load reductions of 84.1%, and
- Internal load reductions of 84.3%, aimed at reducing CLPW to non-nuisance conditions and reducing releases from bottom sediments.

Table 17 presents the phosphorus TMDL and allocations for Rice Lake.

Table 17. Rice Lake Phosphorus TMDL and Allocations

Rice Lake-Main Basin TMDL Summary (AUID 27-0116-01)		**Existing TP Load[1]**	**TP Allocations**		**Load Reduction**	
		lbs/yr	lbs/yr	lbs/day	lbs/yr	%
TOTAL LOAD/LOADING CAPACITY		12632.7	2307.1	6.321	10325.6	81.7%
5% EXPLICIT MOS		0.0	115.4	0.316	115.4	0.9%
TOTAL REDUCTION					**10441.0**	**82.7%**
WLAs	Construction/Industrial Stormwater	23.1	23.1	0.063	0.0	0.0%
	Maple Grove MS4	4104.1	654.5	1.793	3449.5	84.1%
	Plymouth MS4	1216.0	193.9	0.531	1022.1	84.1%
	Medina MS4	1271.0	202.7	0.555	1068.3	84.1%
	Corcoran MS4	370.2	59.0	0.162	311.2	84.1%
	Hennepin County MS4	79.1	12.6	0.035	66.5	84.1%
	MnDOT MS4	151.3	24.1	0.066	127.2	84.1%
LAs	Non-MS4 Runoff	1952.3	311.3	0.853	1640.9	84.1%
	Upstream Lake (Fish Lake)	107.0	107.0	0.293	0.0	0.0%
	Atmospheric Deposition	88.4	88.4	0.242	0.0	0.0%
	Internal Load	3270.3	515	1.411	2755.3	84.3%

[1] Existing TP load is the average for the years 2010 - 2012.

4.2.7.3 Diamond Lake

Key findings pertaining to Diamond Lake are as follows:

- Diamond Lake is approximately 389 acres in surface area. Diamond Lake is classified as a **shallow lake**, with a maximum depth of 7.4 feet. The lake is at the headwaters of Diamond Creek and has a contributing watershed area of about 2,580 acres.
- Recent water quality data indicates the lake has shown an improving trend in water clarity and that June through September seasonal mean water clarity values have been as good as or better than shallow lake standards for this parameter in three of the four years prior to 2012 (inclusive). Phosphorus and Chl-*a* remain above the shallow lake standards.
- CLPW is present throughout the lake, often at nuisance levels.
- About 28% of the phosphorus load affecting surface water quality in the lake comes from internal sources, while about 69% comes from watershed sources. Growth and senescence of CLPW is the largest source of internal loading, followed by release of phosphorus by bottom sediments.

To meet the TMDL, a net reduction in TP load affecting Diamond Lake of 2,062.2 lbs/yr will be needed, equal to a 71.2% reduction of the current total load of 2,898.0 lbs/year. However, the gross reduction from all sources must include the MOS as well, and therefore is 2,062.2 lbs/yr + 41.8 = 2,104.0 lbs/yr. It is not possible to meet the TMDL through watershed load reductions alone (i.e, the sum of the existing loads from atmospheric deposition and internal loading exceed the total loading capacity for Diamond Lake). Therefore, a combination of watershed load reduction and internal load reduction will be necessary to meet the TMDL. The total load reduction needed can be achieved through:

- Watershed load reductions of 73.5%, and
- Internal load reductions of 80.5%, aimed at reducing CLPW to non-nuisance conditions.

Table 18 presents the phosphorus TMDL and allocations for Diamond Lake.

Table 18. Diamond Lake Phosphorus TMDL and Allocations

Diamond Lake TMDL Summary (AUID 27-0125)		**Existing TP Load[1]**	**TP Allocations**		**Load Reduction**	
		lbs/yr	lbs/yr	lbs/day	lbs/yr	%
TOTAL LOAD/LOADING CAPACITY		2898.0	835.8	2.290	2062.2	71.2%
5% EXPLICIT MOS		0.0	41.8	0.114	41.8	1.4%
TOTAL REDUCTION					**2104.0**	**72.6%**
WLAs	Construction/Industrial Stormwater	8.4	8.4	0.023	0.0	0.0%
	Dayton MS4	258.4	68.4	0.187	190.0	73.5%
	Rogers MS4	1209.5	320.3	0.877	889.2	73.5%
	Hennepin County MS4	16.2	4.3	0.012	11.9	73.5%
	MnDOT MS4	15.4	4.1	0.011	11.3	73.5%
LAs	Non-MS4 Runoff	489.8	129.7	0.355	360.1	73.5%
	Atmospheric Deposition	103.8	103.8	0.284	0.0	0.0%
	Internal Load	796.5	155.1	0.425	641.4	80.5%

[1] Existing TP load is the average for the years 2010 and 2011.

4.2.7.4 Goose Lake

Key findings pertaining to Goose Lake are as follows:

- Goose Lake is approximately 64.4 acres in area and has a maximum depth of 6.6 feet and is a **shallow lake**. The watershed area draining to the lake is approximately 240 acres. A major portion of the watershed acreage resides within the Elm Creek Park Reserve. A small residential development also drains to the lake.
- Water quality data indicates the lake is hyper-eutrophic, with conditions that exceed the shallow lake standards for phosphorus, Chl-*a*, and secchi depth transparency. The lake is proposed for listing as impaired for nutrients in 2016.
- An aquatic vegetation survey conducted in 2012 indicated the lake does not have a diverse native plant community. The lake also does not appear to have nuisance growth of CLPW. The lake appears to be in a persistent algal-dominated condition.
- Watershed loading accounts for approximately 33.6% of the TP load; and internal loading accounts for approximately 53.4% of the TP load. Sediment release of phosphorus is the primary source of internal loading.

To meet the TMDL, a net reduction in TP load affecting Goose Lake of 106.5 lbs/yr will be needed, equal to an 80.0% reduction of the current total load of 133.2 lbs/year. However, the gross reduction from all sources must include the MOS as well, and therefore is 106.5 lbs/yr + 1.3 lbs/yr = 107.8 lbs/yr. It is not possible to meet the TMDL through watershed load reductions alone (i.e. the sum of the existing loads from atmospheric deposition and internal loading exceed the loading capacity for Goose Lake). Therefore, a combination of watershed load reduction and internal load reduction will be necessary to meet the TMDL. The total load reduction needed can be achieved through:

- Watershed load reductions of 82.2%, and
- Internal load reductions of 100%.

Table 19 presents the phosphorus TMDL and allocations for Goose Lake.

Table 19. Goose Lake Phosphorus TMDL and Allocations

Goose Lake TMDL Summary (AUID 27-0122)		**Existing TP Load[1]**	**TP Allocations**		**Load Reduction**	
		lbs/yr	lbs/yr	lbs/day	lbs/yr	%
LOADING CAPACITY/TOTAL LOAD		133.2	26.7	0.073	106.5	80.0%
5% EXPLICIT MOS		0.0	1.335	0.004	1.3	1.0%
TOTAL REDUCTION					**107.8**	**81.0%**
WLAs	Construction/Industrial SW	0.3	0.3	0.001	0.0	0.0%
	Champlin MS4	20.8	3.7	0.010	17.1	82.2%
	Dayton MS4	19.9	3.5	0.010	16.3	82.2%
	Hennepin County MS4	0.9	0.2	0.0004	0.8	82.2%
LAs	Non-MS4 Runoff	3.0	0.5	0.001	2.4	82.2%
	Atmospheric Deposition	17.2	17.2	0.047	0.0	0.0%
	Internal Load	71.2	0	0.000	71.2	100.0%

[1] Existing TP load is the average for the years 2011 and 2012.

4.2.7.5 Cowley Lake

Key findings pertaining to Cowley Lake are as follows:

- Cowley Lake is approximately 32.9 acres in area with a maximum depth of 8.0 feet. It is classified as a **shallow lake**. The watershed area draining to the lake is approximately 827 acres. The primary land use within the watershed is agricultural.
- Water quality data indicates the lake is considered hyper-eutrophic with June through September seasonal mean TP, Chl-*a*, and secchi depth values exceeding the shallow lake standards.
- Aquatic vegetation surveys indicated nuisance levels of CLPW present within the lake.
- Approximately 49.5% of the TP load to the lake is from watershed sources. Internal loading accounts for 49.4% of the TP loading. Sediment release of phosphorus is the primary source of internal loading followed by growth and senescence of CLPW.

To meet the TMDL, a net reduction in TP load affecting Cowley Lake of 751.1 lbs/yr will be needed, equal to an 88.8% reduction of the current total load of 846.1 lbs/year. However, the gross reduction from all sources must include the MOS as well, and therefore is 751.1 lbs/yr + 4.8 lbs/yr = 755.9 lbs/yr. It is not possible to meet the TMDL through watershed load reductions alone (i.e, the sum of the existing loads from atmospheric deposition and internal loading exceed the loading capacity for Cowley Lake). Therefore, a combination of watershed load reduction and internal load reduction will be necessary to meet the TMDL. The total load reduction needed can be achieved through:

- Watershed load reductions of 80.7%, and;
- Internal load reductions of 100%, aimed at reducing sediment phosphorus release to the background levels embedded in the lake response models used to analyze Cowley Lake and reducing CLPW to non-nuisance conditions.

Table 20 presents the phosphorus TMDL and allocations for Cowley Lake.

Table 20. Cowley Lake Phosphorus TMDL and Allocations

Cowley Lake TMDL Summary (AUID 27-0169)		**Existing TP Load[1]**	**TP Allocations**		**Load Reduction**	
		lbs/yr	lbs/yr	lbs/day	lbs/yr	%
TOTAL LOAD/LOADING CAPACITY		846.1	95	0.260	751.1	88.8%
5% EXPLICIT MOS		0.0	4.75	0.013	4.8	0.6%
TOTAL REDUCTION					**755.9**	**89.3%**
WLAs	Construction/Industrial Stormwater	1.0	1.0	0.003	0.0	0.0%
	Rogers MS4	292.9	56.5	0.155	236.5	80.7%
	Hennepin County MS4	1.0	0.2	0.001	0.8	80.7%
LAs	Non-MS4 Runoff	123.7	23.8	0.065	99.9	80.7%
	Atmospheric Deposition	8.8	8.8	0.024	0.0	0.0%
	Internal Load	418.7	0	0.000	418.7	100.0%

[1] Existing TP load is the average for the year 2006

4.2.7.6 Sylvan Lake

Key findings pertaining to Sylvan Lake are as follows:

- Sylvan Lake is approximately 148.1 acres in area with a maximum depth of 10.0 feet. It is therefore classified as a **shallow lake**. The watershed area draining to the lake is approximately 320 acres. The dominant land use within the watershed is agricultural.
- Water quality data indicates the lake exhibits hyper-eutrophic conditions and exceed the shallow lake standards for phosphorus, Chl-*a*, and Secchi depth transparency.
- Aquatic vegetation surveys conducted in 2012 indicated the lake has nuisance levels of CLPW. After senescence of CLPW, the lake has severe algal blooms that persist throughout the remaining portion of the summer.
- Watershed loading accounts for approximately 24% of the TP load; internal loading accounts for approximately 73% of the TP load. Sediment release of phosphorus is the primary source of internal loading followed by the senescence of CLPW.

To meet the TMDL, a net reduction in TP load affecting Sylvan Lake of 999.1 lbs/yr will be needed, equal to an 83.0% reduction of the current total load of 1203.1 lbs/year. However, the gross reduction from all sources must include the MOS as well, and therefore is 999.1 lbs/yr + 10.2 lbs/yr = 1009.3 lbs/yr It is not possible to meet the TMDL through watershed load reductions alone (i.e, the sum of the existing loads from atmospheric deposition and internal loading exceed the loading capacity for Sylvan Lake). Therefore, a combination of watershed load reduction and internal load reduction will be necessary to meet the TMDL. The total load reduction needed can be achieved through:

- Watershed load reductions of 76.7%, and
- Internal load reductions of 90.2%, aimed at reducing sediment phosphorus release to near the background levels embedded in the lake response models used to analyze Sylvan Lake and reducing CLPW to non-nuisance conditions.

Table 21 presents the phosphorus TMDL and allocations for Sylvan Lake.

Table 21. Sylvan Lake Phosphorus TMDL and Allocations

Sylvan Lake TMDL Summary (AUID 27-0171)		**Existing TP Load[1]**	**TP Allocations**		**Load Reduction**	
		lbs/yr	lbs/yr	lbs/day	lbs/yr	%
TOTAL LOAD/LOADING CAPACITY		1203.1	204	0.559	999.1	83.0%
5% EXPLICIT MOS		0.0	10.2	0.028	10.2	0.8%
TOTAL REDUCTION					**1009.3**	**83.9%**
WLAs	Construction/Industrial Stormwater	1.9	1.9	0.005	0.0	0.0%
	Rogers MS4	47.1	11.0	0.030	36.1	76.7%
LAs	Non-MS4 Runoff	237.2	55.2	0.151	182.0	76.7%
	Atmospheric Deposition	39.7	39.7	0.109	0.0	0.0%
	Internal Load	877.2	86	0.236	791.2	90.2%

[1] Existing TP load is the average for the year 2012.

4.2.7.7 Henry Lake

Key findings pertaining to Henry Lake are as follows:

- Henry Lake is approximately 47 acres in area with a maximum depth of 8.2 feet. It is therefore classified as a **shallow lake**. The watershed area draining to the lake is approximately 812 acres. The primary land use within the watershed is agricultural.
- The seasonal average phosphorus concentrations (June through September) indicate the lake has hyper-eutrophic conditions exceeding the shallow lake standard. The Chl-*a* and water clarity response variables also exceed the shallow lake standards for majority of the years, but have occasionally met the shallow lake standards during periods in which the lake is in a rooted-plant dominated condition. The shallow lake seems to alternate between the algal and plant dominated conditions.
- Aquatic vegetation surveys indicated the lake has nuisance levels of CLPW. The lake also has a diverse native plant community in some years. The lake was in the rooted aquatic plant-dominated condition at the time of the macrophyte survey in 2011.
- Watershed loading accounts for approximately 71% of the TP load to the lake; internal loading accounts for approximately 27.6% of the TP load. Both sediment release of phosphorus and senescence of CLPW are considered significant sources of internal loading.

To meet the TMDL, a net reduction in TP load affecting Henry Lake of 778.9 lbs/yr will be needed, equal to an 80.1% reduction of the current total load of 972.5 lbs/year. However, the gross reduction from all sources must include the MOS as well, and therefore is 778.9 lbs/yr + 9.7 lbs/yr = 788.6 lbs/yr. It is not possible to meet the TMDL through watershed load reductions alone (i.e. the sum of the existing loads from atmospheric deposition and internal loading exceed the loading capacity for Henry Lake). Therefore, a combination of watershed load reduction and internal load reduction will be necessary to meet the TMDL. The load reduction needed can be achieved through:

- Watershed load reductions of 82.4%, and
- Internal load reductions of 82.1%, aimed at reducing curlyleaf pondweed growth to non-nuisance conditions and reducing sediment phosphorus release.

Table 22 presents the phosphorus TMDL and allocations for Henry Lake.

Table 22. Henry Lake Phosphorus TMDL and Allocations

Henry Lake TMDL Summary (AUID 27-0175)		**Existing TP Load[1]**	**TP Allocations**		**Load Reduction**	
		lbs/yr	lbs/yr	lbs/day	lbs/yr	%
TOTAL LOAD/LOADING CAPACITY		972.5	193.6	0.530	778.9	80.1%
5% EXPLICIT MOS		0.0	9.7	0.027	9.7	1.0%
TOTAL REDUCTION					**788.6**	**81.1%**
WLAs	Construction/Industrial Stormwater	1.8	1.8	0.005	0.0	0.0%
LAs	Non-MS4 Runoff	689.4	121.5	0.333	567.9	82.4%
	Atmospheric Deposition	12.6	12.6	0.035	0.0	0.0%
	Internal Load	268.7	48	0.132	220.7	82.1%

[1] Existing TP load is the average for the years 2009 and 2011.

4.3 Biotic Impairments/Stressors (including DO)

A SID analysis based on the CADDIS methodology (EPA 2000) was conducted to apply a “strength of evidence” approach to evaluate candidate causes affecting biotic integrity. The Elm Creek Watershed SID Report (Lehr 2015) evaluated the following candidate stressors:

- Water temperature
- ph
- un-ionized ammonia
- excess nitrate
- organic contaminants
- inorganic contaminants (heavy metals)
- altered hydrology
- altered physical habitat
- excess sediment
- excess phosphorus
- low DO
- excess chloride

Six probable stressors were identified within the Elm Creek Watershed; however, the relative impact of these stressors varies based on the stream reach. The relative impact of these different stressors is summarized in Table 23.

Table 23. Summary of Stressors to Biotic Assemblages in the Elm Creek Watershed

HUC-8 Subwatershed	AUID (Last 3 digits)	Stream	Reach Description	Biological Impairment	Primary Stressor					
					Altered Hydrology	Altered Physical Habitat	Excess Sediment	Excess Phosphorus	Low DO	Excess Chloride
7010206 Mississippi River-Twin Cities	508	Elm Creek	Headwaters (Lk Medina 27-0146-00) to Mississippi River	Fish	•	o	•	o	•	/
				Macroinvertebrates	o	o	o	o	o	/
	525	Diamond Creek	Headwaters (French Lk 27-0127-00) to Unnamed Lake	Fish	•	•	•	o	•	/
				Macroinvertebrates	•	o	o	o	•	/
	528	Rush Creek, Main Stem	Headwaters to Elm Creek	Fish	•	o	•	o	•	/
				Macroinvertebrates	•	o	•	o	o	/
	732	Rush Creek, South Fork	Unnamed Lk (27-0439-00) to Rush Creek	Fish	•	•	•	•	•	/
				Macroinvertebrates	o	•	o	•	o	/
	760	Rush Creek, South Fork	Unnamed ditch to County Ditch 16	Fish	•	•	•	•	•	/
				Macroinvertebrates	o	•	o	o	•	/

• = Primary Stressor
o = Secondary Stressor
/ = Inconclusive Stressor

A summary of the recommendations from the SID report pertaining to the pollutant and non-pollutant stressors and how they should be addressed in this TMDL effort is summarized in Table 24.

Table 24. Recommended Prioritization of TMDLs Relative to the Stressors Contributing to the Biological Impairment in the Elm Creek Watershed

Stressor	Priority	Comment
Altered Hydrology	High	TMDL should focus on reestablishing historical hydrologic patterns.
Altered Physical Habitat	High	TMDL should focus on increasing the diversity of sediment types and functionality of large woody debris.
Excess Sediments	High	TMDL should be conducted concurrent to altered habitat to focus on increasing the diversity of bed sediment size.
Excess Phosphorus	Medium	TMDL should focus on addressing the current loads and historical accumulation of phosphorus in wetlands (should potentially be expanded to include nitrogen).
Low DO	Medium	Additional monitoring should be conducted to describe the relative contribution of low DO from wetland complexes and the alignment of biological monitoring stations with different habitat types. TMDL should focus on historical accumulation of phosphorus in wetlands and nitrification (particularly in Rush Creek).

In summary, the non-pollutant stressors of altered hydrology and altered physical habitat will be addressed as part of this TMDL project, as will the pollutant stressors of excess sediments and excess phosphorus.

It is important to note that TP (and the corresponding TMDL) is being used as a surrogate to address low DO based on the spatial correlation between DO impairment, TP concentrations and BOD (Lehr 2015). Low DO conditions can be caused through a variety of mechanisms (see Section 3.5.3); however, excessive oxygen demand resulting from excess nutrient-driven productivity is common throughout urban and agricultural stream systems (Dodds 2006). Given the high TP concentrations observed throughout the Elm Creek system, the potential role of excess TP as a primary cause of low DO was investigated by examining the correlation between DO impairment, carbonaceous BOD (which results from microbial degradation or organic matter) and TP concentrations. A summary of findings from the SID analysis (Lehr 2015) pertaining to this issue is presented below:

- Biological and chemical evidence suggests that the severity of DO impairment decreases from upstream to downstream. This trend is strongly correlated with TP-BOD relationships.
- Rush Creek (AUID 528) has the strongest evidence for DO impairment and similarly, the second highest average BOD concentration—and BOD concentrations are relatively well correlated to TP concentrations. This relationship between DO impairment, BOD and TP concentrations is consistent across sites in South Rush Creek, Diamond Creek and Upper Elm Creek, where sites with the strongest level of DO impairment also have the highest BOD concentrations and/or strongest TP-BOD correlations.
- Lower Elm Creek has consistent chemical data to support DO impairment, but the corresponding biological communities are less consistent with low DO conditions. Given the diurnal variation in DO concentration associated with wetland-influenced sites in lower Elm Creek, low DO conditions are likely driven by BOD that originates from wetland plant decomposition. The BOD-TP relationship from lower Elm Creek corroborates the chemical and biological data. Relatively high BOD concentrations were observed in lower Elm Creek, but the correlation to TP was particularly weak. Taken together, these data suggest that localized areas of low DO likely exist

in lower Elm Creek, but that this is primarily driven by wetland processes and not general water quality conditions.

4.3.1 Altered Hydrology

4.3.1.1 Extent of Impairment and Determination of Loading Capacity

Extent of Impairment. Evidence for biotic impacts from altered hydrology is relatively common across all AUIDs. The SID report (Lehr 2015) presents information that shows land use and precipitation patterns driving stream hydrology have clearly shifted over the last 30 years. Concurrently, discharge patterns in Elm Creek have shifted to a flashier hydrologic regime and the physical and chemical stressors that commonly result from altered hydrology have increased throughout the watershed. Given the lack of historical biological data, biotic assemblages within Elm Creek cannot be analyzed for temporal response. However, the current fish and macroinvertebrate assemblages are generally consistent with those commonly observed in flashy hydrologic systems, in which high-flow events episodically scour stream habitat, but the majority of the hydrograph is dominated by low-flow conditions (Poff and Allan 1995; Roy, et. al. 2005; Dewson, et. al. 2007). Hydrologically-induced shifts in fish assemblage composition are the most pronounced and consistent across AUIDs, while the response of Macroinvertebrate matrices is less pronounced and less consistent across AUIDs, suggesting that flow-regime structure may be a more significant driver of community structure than peak erosive potential and that habitat conditions may vary within Elm Creek. Among AUIDs, the biotic response to altered hydrology is most pronounced in stream AUIDs -508 (Elm Creek), -732 (Lower South Fork, Rush Creek) and -528 (Rush Creek mainstem) and least pronounced in -760 (upper South Fork, Rush Creek) and -525 (Diamond Creek).

Determination of Loading Capacity/Implementation Priorities. No specific criteria for hydrological stability/instability have been developed in the state of Minnesota. As such, it is not possible to calculate a specific loading capacity for this stressor, but there are a range of implementation activities that will complement and enhance the reduction of the stressors for which TMDLs are being developed. The primary cause of hydrologic instability is conversion of lands away from native vegetative cover towards more impervious surfaces, which increases the rate and volume of runoff and minimizes GW recharge and base flow. Management practices that reduce the rate and volume of runoff and maximize infiltration will have the greatest benefit to the Elm Creek system. Secondarily, management efforts should focus on a reconnection of the incised stream channel to its formerly connected floodplain and wetlands systems. Management practices that increase habitat connectivity will benefit the management of both high and low flow periods as well as maximize habitat diversity for aquatic organisms. Implementation of management practices to address altered hydrology should be initially focused in upstream reaches of the watershed to maximize the benefits of hydrologic restoration throughout the watershed.

4.3.2 Altered Physical Habitat

4.3.2.1 Extent of Impairment and Determination of Loading Capacity

Extent of Impairment. Evidence for biotic impacts from physical habitat alteration is mixed across AUIDs and assemblages (Lehr 2015). Altered hydrologic and land use patterns that commonly result in altered physical habitat in streams have clearly shifted throughout the watershed over the last 30 years.

Concurrently, physical habitat in streams throughout the Elm Creek Watershed has shifted to a more homogenous, lower quality condition, although areas of moderate to good habitat continue to persist in lower Elm and Rush Creeks. Given the lack of historical biological data, assemblages within Elm Creek cannot be analyzed for temporal response to physical habitat alteration. Current fish assemblages in all AUIDs except -528 are consistent with homogenous, lower quality stream habitat conditions—richness of fish assemblages is generally reduced over unimpaired sites and dominated by relatively few taxa that utilize a limited number of habitat types (or are generalists across a range of habitat types). However, richness, diversity and proportional dominance of taxa for of Macroinvertebrate assemblages in all AUIDs are relatively consistent with unimpaired sites.

Determination of Loading Capacity/Implementation Priorities. No specific criteria for habitat quality have been developed in the state of Minnesota. As such, it is not possible to calculate a specific loading capacity for this stressor. However, there are a range of implementation activities that will complement and enhance the reduction of the stressors for which TMDLs are being developed. The primary cause of habitat alteration is altered stream hydrology, which has led to channel incision and a homogenization of substrate types throughout the system. Efforts to restore hydrologic stability in the system will likely have the greatest impact on habitat throughout the Elm Creek system. In addition to hydrologically-oriented restoration, localized efforts to enhance large woody debris recruitment, maximize the diversity of flow regimes and minimize streambank sediment erosion will increase the rates of habitat restoration throughout the system. As with hydrology, management/restoration efforts should focus on sites in upstream reaches to maximize benefits throughout the watershed. Additionally, hydrologic restoration should generally precede efforts to restore streambank stability to maximize the longevity and minimize the costs associated with any engineered structures.

4.3.3 Excess Sediment

4.3.3.1 Extent of Impairment and Determination of Loading Capacity

Extent of Impairment. The state stream standards for TSS adopted by MPCA (MPCA 2014) establishes the connection between stream TSS levels and the condition of stream biologic communities. The Elm Creek Watershed project area is located within the Central River region as identified in the technical support document for those standards. A stream within the Central River region is considered impaired for TSS if more than 10% of the April-September samples exceed 30 mg/l. Table 25 summarizes TSS data collected by stream reach and by monitoring station within the Elm Creek Watershed during the period 2003 to 2012. The information presented includes the stream reach within which the data was collected, the monitoring site designation, the period of record for the data presented, the total number of data points during the April through September period, the number of data points with values greater than 30 mg/l, and the percent of those samples exceeding the standard. Where multiple monitoring sites lie within a single impaired reach, the data presented for those monitoring sites is in upstream to downstream order. Finally, the last row under each stream reach is a summary of data for all the monitoring sites in that reach and was used as the main factor in determining which stream reaches required a TMDL to address TSS. Red figures in the far right-hand column indicate exceedance of the TSS standard. Note that the upper reach of the South Fork, Rush Creek (AUID -760) has no TSS monitoring data, therefore the data for the lower reach of the South Fork, Rush Creek (AUID -732) was used as a surrogate.

Table 25. Summary of TSS Data for Biotic Community-Impaired Reaches

Stream Reach (AUID)	Monitoring Site	EQuIS ID	Years	Total Number of TSS Samples (N)	N Greater Than 30 mg/L	% of N greater than 30 mg/L
South, Fk, Rush Cr. (Lower) (AUID - 732)	RCSL	S004-542	2007-2012	56	3	5.4%
	Reach Total			**56**	**3**	**5.4%**
Rush Cr., Main stem (AUID - 528)	RCTH	S004-541	2007-2012	56	7	12.5%
	RC116	S004-540	2009-2012	25	2	8.0%
	RT	S004-539	2007-2012	111	8	7.2%
	Reach Total			**192**	**17**	**8.9%**
Diamond Cr. (AUID 525)	DCZ	S004-536	2007-2012	66	17	25.8%
	SD	S004-537	2007-2012	35	18	51.4%
	DC	S004-538	2007-2012	103	15	14.6%
	Reach Total			**204**	**50**	**24.5%**
Elm Cr. (AUID - 508)	HAMEL	S004-545	2003-2012	163	64	39.3%
	ECER	S004-544	2003-2012	126	28	22.2%
	EC77	S004-543	2007-2012	141	43	30.5%
	ECW	S003-441	2009-2012	46	7	15.2%
	EC81	S005-338	2008-2012	97	17	17.5%
	USGS	S004-222	2003-2012	106	1	0.9%
	ECHO	S004-221	2009-2012	72	0	0.0%
	Reach Total			**751**	**160**	**21.3%**

[1] Includes only data collected during April-September period
[2] Values highlighted in red exceed 100 ug/l standard

Figure 24 overlays the TSS data and information on a map of the watershed. The data indicate that TSS do not exceed the threshold percent exceedance in Rush Creek mainstem when considering the entire monitoring data set for that reach, nor is the impairment threshold exceeded in the South Fork of Rush Creek. Both Diamond Creek (AUID -525) and Elm Creek (AUID -508) show moderate exceedances, especially in their upper reaches. Finally, monitoring data for Elm Creek below its confluence with Rush Creek show that this stream segment meets the TSS standard, even though it is part of the longer AUID reach for Elm Creek that does not. In summary, these data support the preparation of a TMDL to address TSS exceedances in Diamond Creek and Elm Creek (their subwatersheds are shaded in Figure 24).

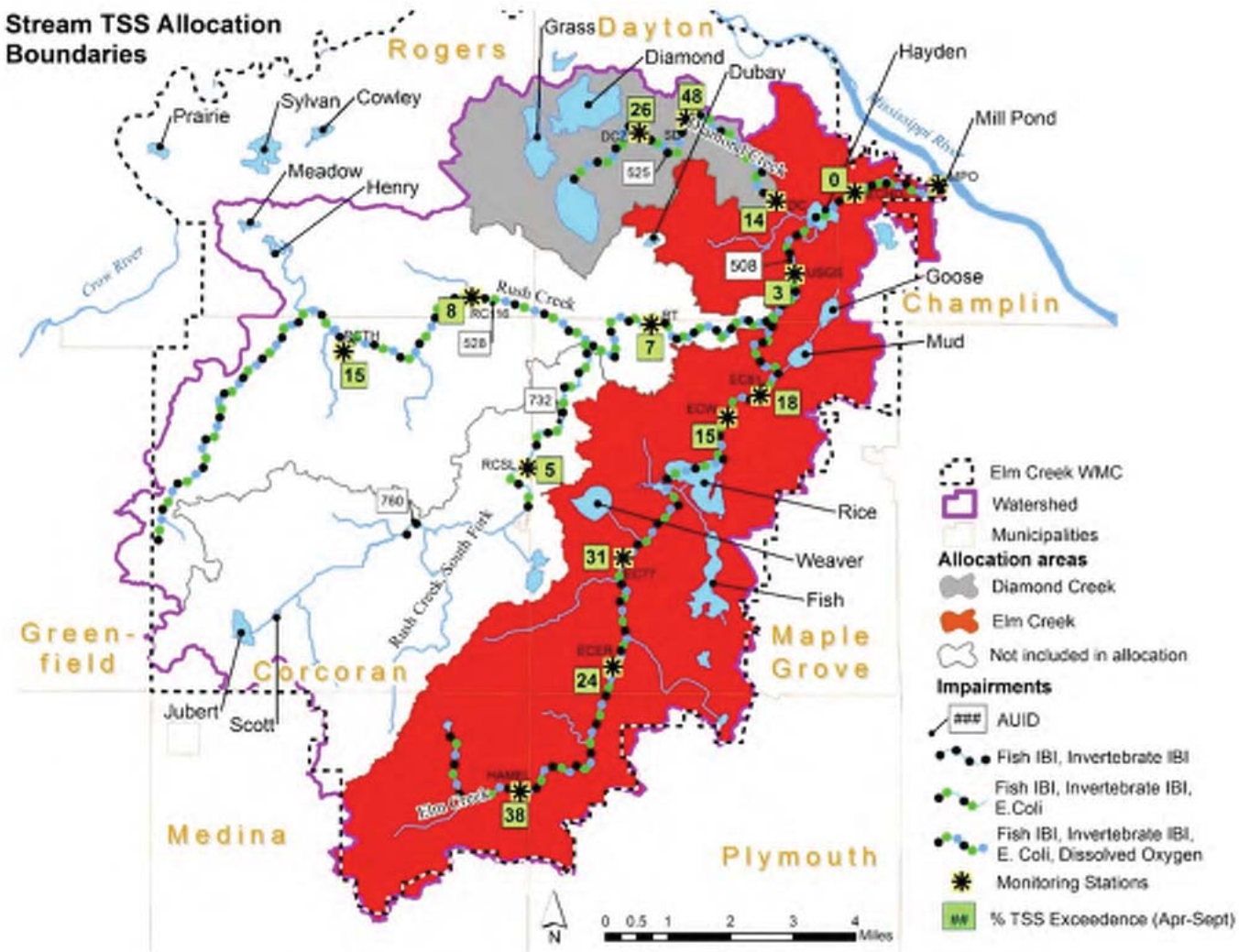

Figure 24. Summary of TSS Data for Biotic Community-Impaired Reaches

Determination of Loading Capacity. Flow and LDCs were used to define the loading capacity for TSS for each of the reaches showing excessive TSS concentrations. The methodology employed for this approach was as described in Section 4.1.1, with flow data from monitoring stations DC and USGS used to generate the flow duration curves for Diamond Creek and Elm Creek, respectively.

To develop the LDC for each reach, all the daily average flows were multiplied by the TSS standard of 30 mg/l and converted to a daily load to create a continuous LDC. The line represents the loading capacity of the stream for each daily flow. The loading capacity can also be compared with current conditions by plotting the measured TSS load for each water quality sampling event. The values above the curve are those which exceed the standard, while those below are better than the standard.

The LDCs and measured load data for the listed reaches are presented in Figure 25 and Figure 26. Note that there are figures at the top of each graph that show the percent reductions needed to meet the standard in that flow regime. It should also be noted that only concentration data from stations showing exceedances of the chronic standard for one or more months during the period 2003 through 2012 were used in calculating the actual loads.

Note: The blue line represents the maximum allowable daily TSS load

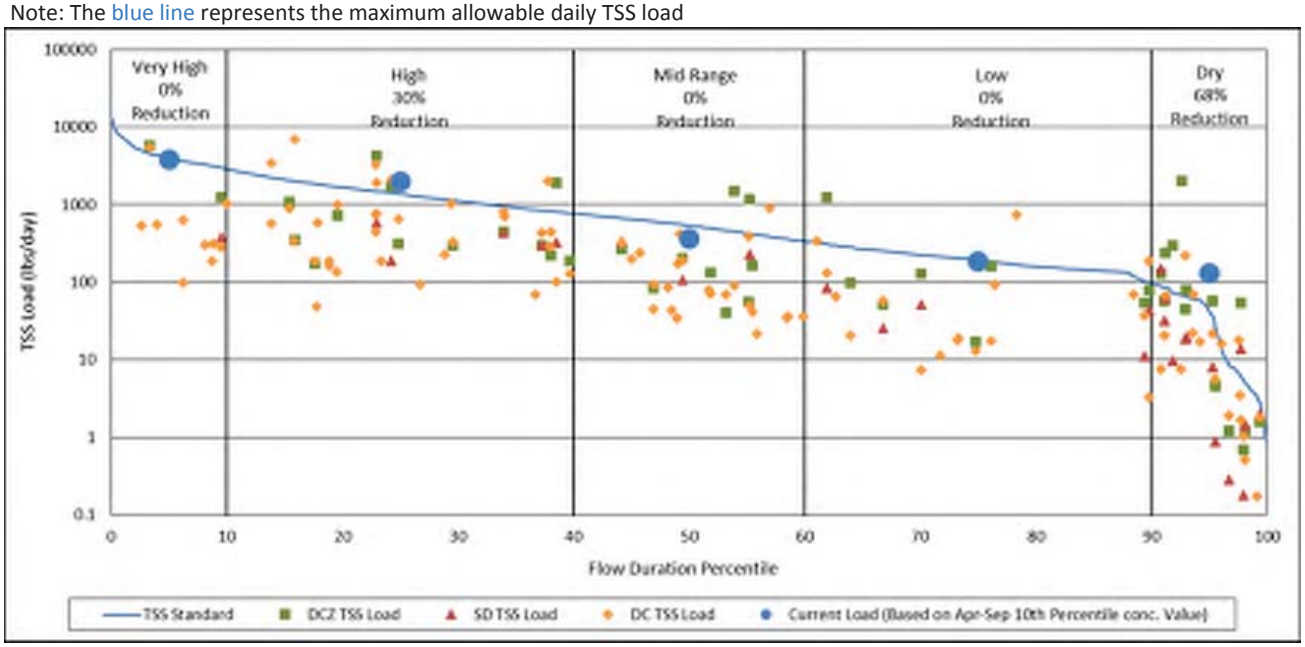

Figure 25. Diamond Creek (AUID - 525) TSS LDC and Required Load Reductions by Flow Regime

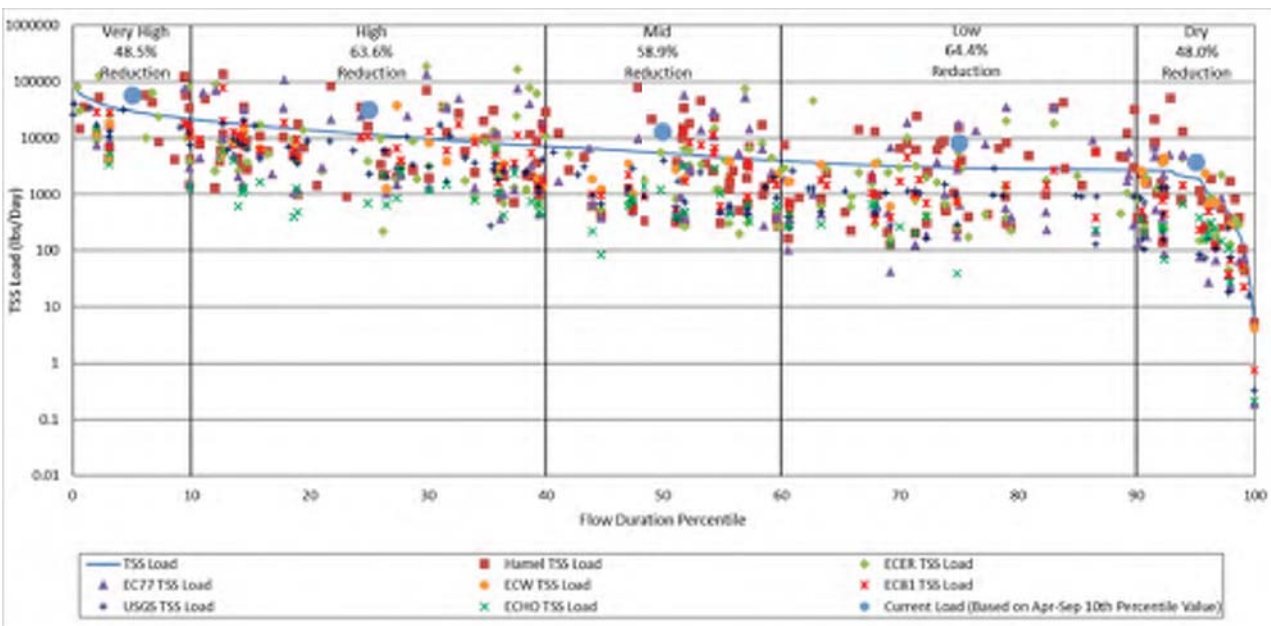

Figure 26. Elm Creek (AUID - 508) TSS LDC and Required Load Reductions by Flow Regime

4.3.3.2 Wasteload and Load Allocation Methodology

The WLA and LA Methodology used to address the TSS stressor for biotic impairments is the same as the methodology described in Section 4.1 for bacteria allocations except for the boundary conditions employed for the Elm Creek TMDL. Here, boundary conditions were established at the bottom of the Rush Creek Subwatershed (AUID -528) based on the fact that this reach meets the stream standard for TSS (and that anti-degradation will sustain this condition) and at the bottom of AUID -525 (Diamond Creek) in anticipation that the TSS TMDL will be fully implemented in that subwatershed. The loads for both reaches were accounted for under the heading “Upstream subwatersheds” in the allocation tables

for the Elm Creek mainstem, with the loads for Rush Creek based on monitored current loads and those for Diamond Creek based on loads consistent with meeting the stream standard of 30 mg/l.

4.3.3.3 Margin of Safety

See Section 4.1.4.

4.3.3.4 Seasonal Variation

See Section 4.1.5.

4.3.3.5 Future Growth

See Section 4.1.6.

4.3.3.6 TMDL Summary

Table 26 and Table 27 present the total loading capacity, MOS, WLAs, and remaining watershed LAs for the two stream reaches that violate the MPCA's TSS stream standard.

Table 26. Diamond Creek TSS TMDL by Flow Zone (AUID - 525)

Diamond Creek: AUID 07010206-525		Flow Zones				
		Very High	High	Mid	Low	Dry
		Total Suspended Solids Load (lbs./Day)				
WLAs	Total WLA	2621.37	899.32	349.07	126.94	27.24
	Construction Stormwater	40.21	13.80	5.36	1.95	0.42
	Industrial Stormwater	20.11	6.90	2.68	0.97	0.21
	MS4 - Dayton	1632.77	560.16	217.43	79.07	16.96
	MS4 - Rogers	903.09	309.82	120.26	43.73	9.38
	MS4 - Hennepin County	13.74	4.71	1.83	0.67	0.14
	MS4 - MnDOT	11.45	3.93	1.52	0.55	0.12
LAs	Total Load Allocations	1198.97	411.33	159.66	58.06	12.46
	Non-MS4 runoff	1198.97	411.33	159.66	58.06	12.46
5% Explicit Margin of Safety (MOS)		201.07	68.98	26.78	9.74	2.09
Total Load (TMDL)		4021.41	1379.63	535.51	194.74	41.78
Existing Load		3843.87	1980.6	331.54	181.88	78.79
Estimated Reduction (%)		0	30	0	0	68

Table 27. Elm Creek TSS TMDL by Flow Zone (AUID - 508)

Elm Creek: AUID 07010206-508		Flow Zones				
		Very High	High	Mid	Low	Dry
		Total Suspended Solids Load (lbs./Day)				
WLAs	Total WLA	9740.83	4308.60	1771.44	1391.02	1024.43
	Construction Stormwater	302.22	116.36	53.69	29.39	19.47
	Industrial Stormwater	151.11	58.18	26.85	14.69	9.73
	MS4 - Champlin	353.62	157.40	64.38	51.28	37.89
	MS4 -Corcoran	1600.87	712.58	291.46	232.17	171.55
	MS4 - Dayton	2172.41	966.98	395.51	315.06	232.79
	MS4 - Maple Grove	3413.36	1519.35	621.44	495.03	365.77
	MS4 - Medina	896.93	399.24	163.30	130.08	96.11
	MS4 - Plymouth	625.82	278.56	113.94	90.76	67.06
	MS4 - Hennepin County	78.40	34.90	14.27	11.37	8.40
	MS4 - MnDOT	146.11	65.03	26.60	21.19	15.66
LAs	Total Load Allocations	7279.30	3240.16	1325.29	1055.70	780.03
	Upstream Subwatersheds (Rush/ Diamond Cr.)	11690.30	3505.90	2004.00	345.00	44.90
	Non-MS4 runoff	7279.30	3240.16	1325.29	1055.70	780.03
5% Explicit Margin of Safety (MOS)		1511.08	581.82	268.46	146.93	97.33
Total Load (TMDL)		30221.50	11636.48	5369.19	2938.65	1946.69
Existing Load		58629.77	32011.66	13064.93	8259.63	3744.87
Estimated Reduction (%)		48.5	63.6	58.9	64.4	48.0

4.3.4 Excess Phosphorus

4.3.4.1 Extent of Impairment and Loading Capacity

Extent of Impairment. As with the TSS, the state stream standards for TP adopted by the MPCA (MPCA 2013) provide a credible means of connecting stream TP data to the condition of a stream biologic community. The Elm Creek Watershed project area is located within the Central River region as identified in the technical support document for those standards. A stream within the Central River region is considered impaired for TP if the mean summertime (June through September) values are greater than 100 ug/l.

Table 28 summarizes the TP data collected by stream reach and by monitoring station within the Elm Creek Watershed during the period 2003 to 2012. The information presented includes the stream reach within which the data was collected, the monitoring site designation, the period of record for the data presented, the total number of data points during the June through September period, and the mean values of all data collected during that period. Where multiple monitoring sites lie within a single impaired reach, the data presented for those monitoring sites is in upstream to downstream order. Red figures in the far right-hand column indicate exceedance of the TP standard. Note that the upper reach of the South Fork, Rush Creek (AUID -760) has no TP monitoring data, therefore the data for the lower reach of the South Fork, Rush Creek (AUID -732) was used as a surrogate.

Table 28. Summary of TP Data for Biotic Community-Impaired Reaches

Stream Reach (AUID)	Monitoring Site	EQuIS ID	Years	Total Number of TP Samples (N)	Mean TP (µg/L)
South, Fk, Rush Cr. (Lower) (AUID - 732)	RCSL	S004-542	2007-2012	44	485.4
	Reach Total			**44**	**485.4**
Rush Cr., Mainstem (AUID - 528)	RCTH	S004-541	2007-2012	31	514
	RC116	S004-540	2007-2012	49	561
	RT	S004-539	2007-2012	76	461
	Reach Total			**156**	**502.9**
Diamond Cr. (AUID 525)	DCZ	S004-536	2007-2012	46	429.6
	SD	S004-537	2007-2012	27	447.5
	DC	S004-538	2007-2012	68	266.5
	Reach Total			**141**	**354.4**
Elm Cr. (AUID - 508)	HAMEL	S004-545	2003-2012	115	313.7
	ECER	S004-544	2003-2012	83	325.8
	EC77	S004-543	2007-2012	98	285.8
	ECW	S003-441	2009-2012	31	365.6
	EC81	S005-338	2008-2012	65	276.9
	USGS	S004-222	2003-2012	93	222.8
	ECHO	S004-221	2009-2012	47	397.1
	Reach Total			**532**	**304.9**

[1] Includes only data collected during June-September period
[2] Values highlighted in red exceed 100 µg/l standard

Figure 27 overlays the TP data and surrogate information on a map of the watershed. The data indicate that TP concentrations exceed the stream standard at all monitoring locations, and that the exceedances are generally most severe in the upper reaches of the listed reaches.

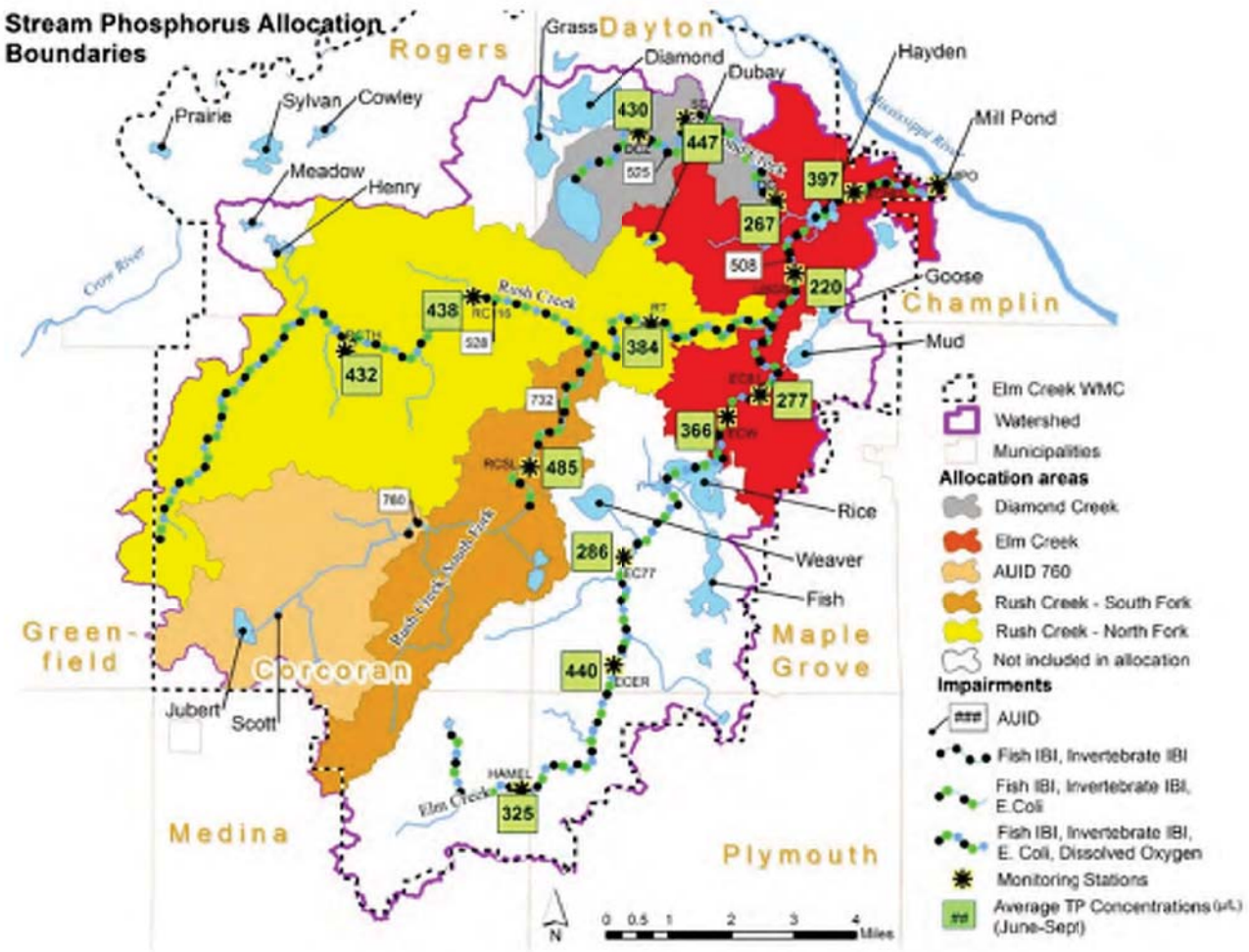

Figure 27. Summary of TP Data for Biotic Community-Impaired Reaches

Determination of Loading Capacity. Flow and LDCs were used to define the loading capacity for TP for each of the stream reaches showing excessive TP concentrations. The methodology employed for this approach was as described in Section 4.1.1.

To develop the LDC for each reach, all the daily average flows were multiplied by the TP standard of 100 ug/l and converted to a daily load to create a continuous LDC. The line represents the loading capacity of the stream for each daily flow. The loading capacity can also be compared with current conditions by plotting the measured TP load for each water quality sampling event. The values above the curve are those which exceed the standard, while those below the LDC line are better than the standard.

The LDCs and measured load data for the listed reaches are presented in the following five Figures. Note that there are figures at the top of each graph that show the percent reductions needed to meet the standard in that flow regime.

Note: The blue line represents the maximum allowable daily TP load

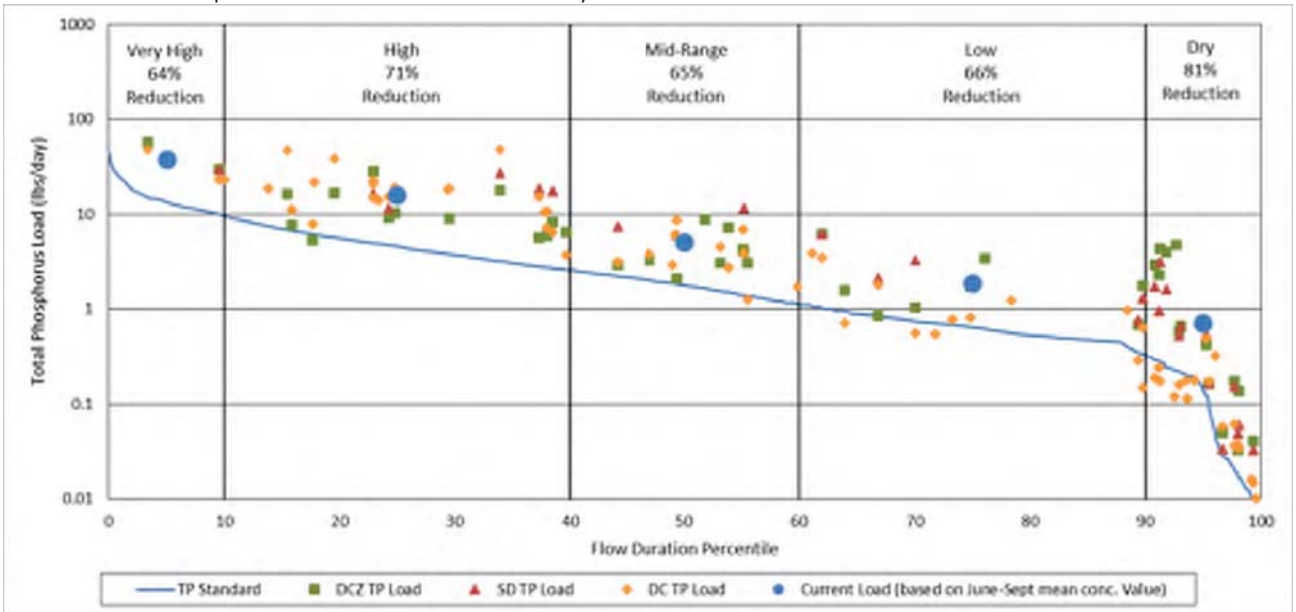

Figure 28. Diamond Creek (AUID - 525) TP LDC and Required Load Reductions by Flow Regime

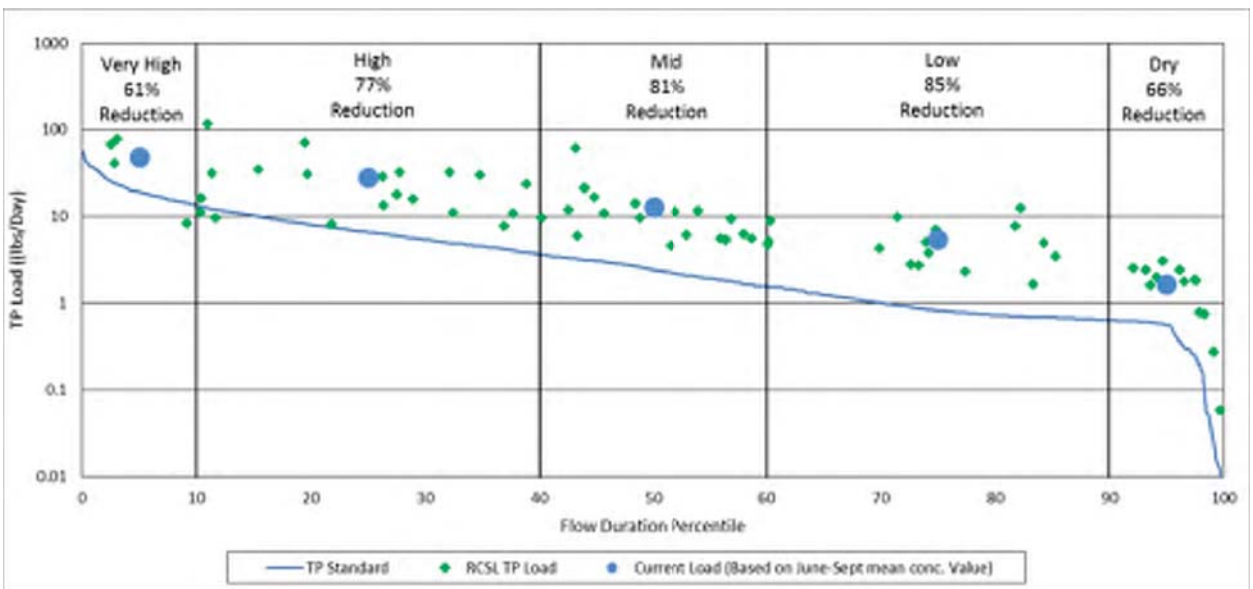

Figure 29. South Fork, Rush Creek (Upper) (AUID - 760) TP LDC and Required Load Reductions by Flow Regime

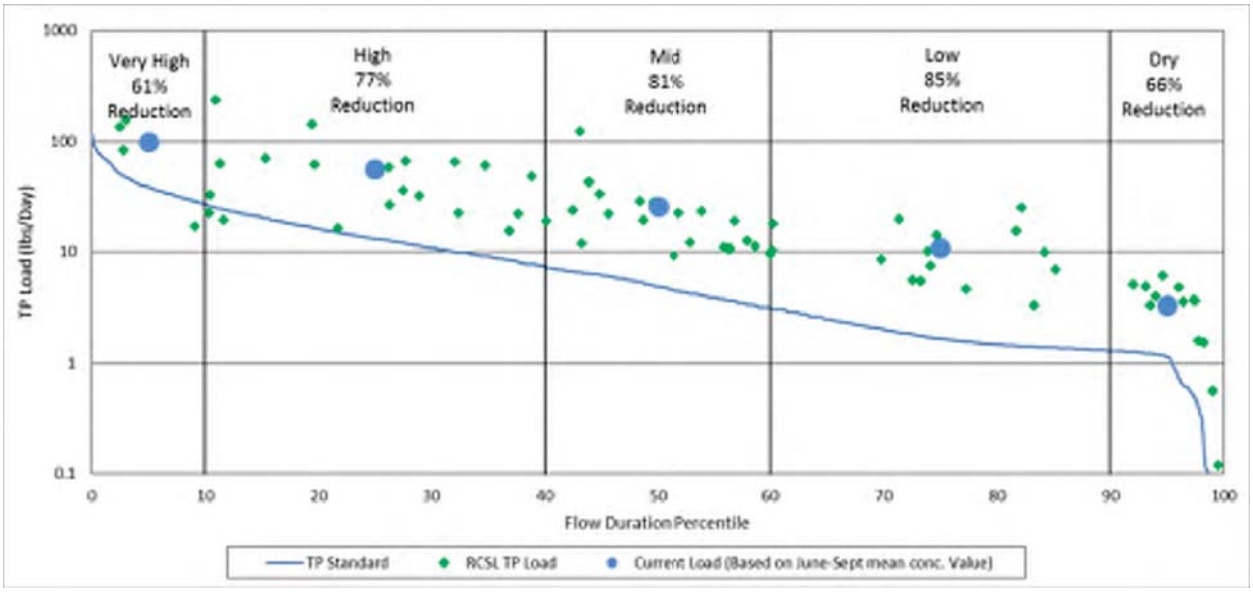

Figure 30. South Fork, Rush Creek (Lower) (AUID - 732) TP LDC and Required Load Reductions by Flow Regime

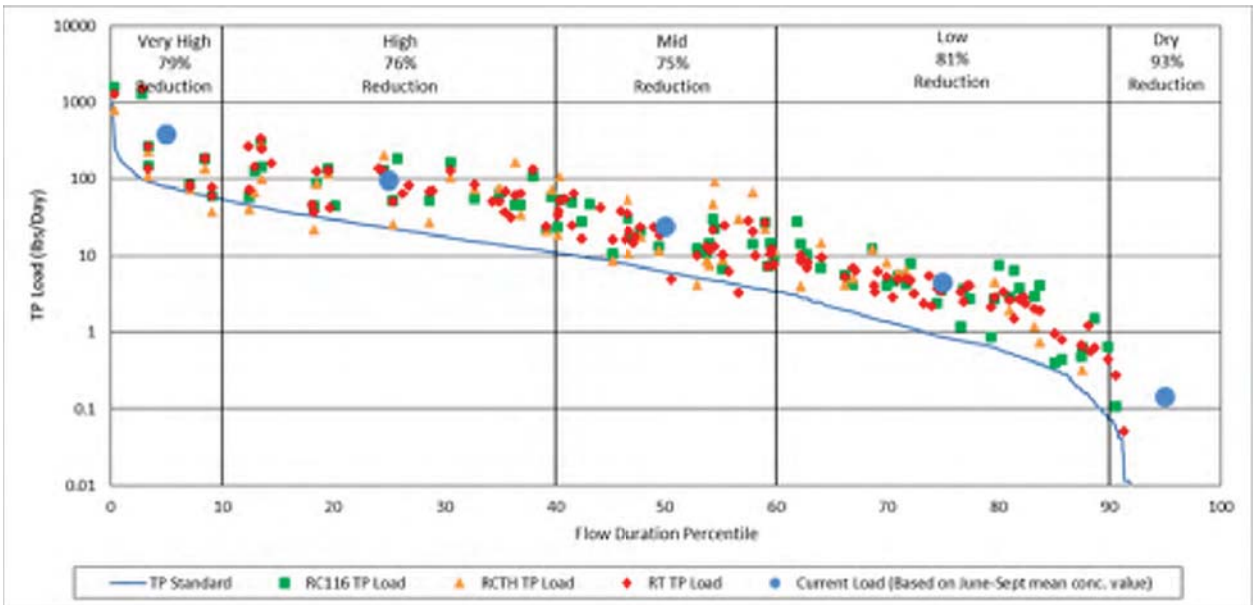

Figure 31. Rush Creek Mainstem (AUID - 528) TP LDC and Required Load Reductions by Flow Regime

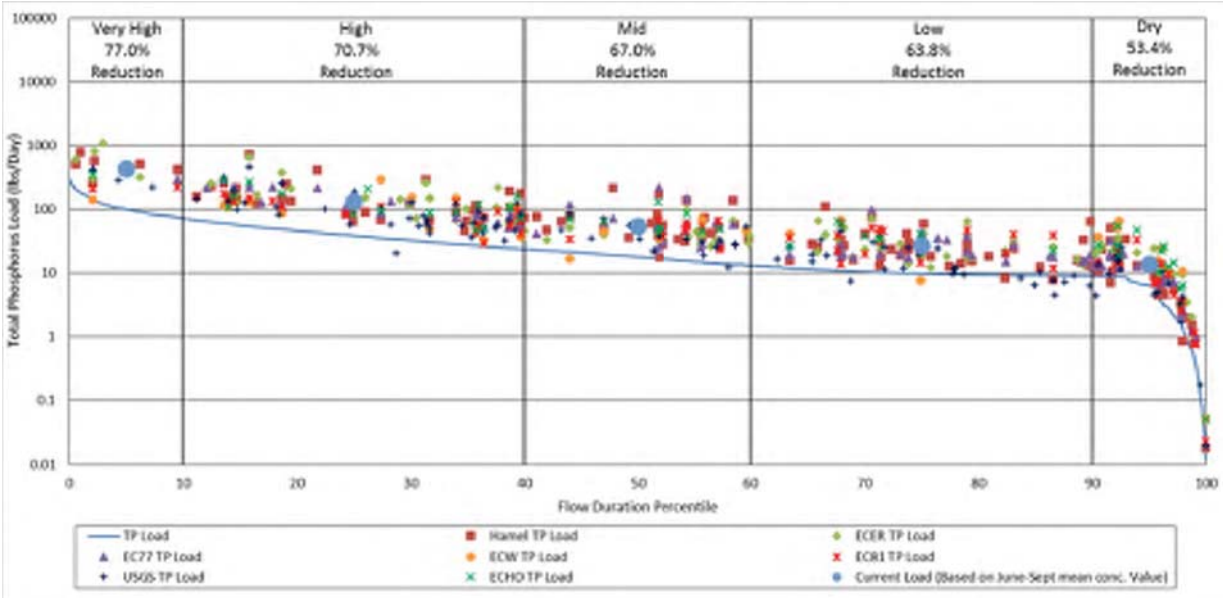

Figure 32. Elm Creek (AUID - 508) TP LDC and Required Load Reductions by Flow Regime

4.3.4.2 Wasteload and Load Allocation Methodology

The WLA and LA Methodology used to address the TP stressor for biotic impairments is the same as the methodology described in Section 4.1 for bacteria allocations except for the boundary conditions employed. The boundary conditions employed are described by reach below:

- Rush Creek mainstem (AUID -528) – Boundary condition established at the outlet of Henry Lake. "Upstream lake" LA assumes Henry Lake will meet an in-lake standard of 60 ug/l TP as per the Henry Lake TMDL.
- Diamond Creek (AUID -525) – Boundary condition established at outlet of Diamond Lake. "Upstream lake" LA assumes Diamond Lake will meet an in-lake standard of 60 ug/l TP as per the Diamond Lake TMDL.
- Elm Creek (AUID – 508) - Boundary conditions established at outlet of Rice Lake and Mud Lake. "Upstream lake" LA assumes Rice Lake will meet an in-lake standard of 60 ug/l TP as per the Rice Lake TMDL and that Mud Lake will continue to meet shallow lake water quality standard of 60 ug/l.

4.3.4.3 Margin of Safety

See Section 4.1.4.

4.3.4.4 Seasonal Variation

See Section 4.1.4

4.3.4.5 Future Growth

See Section 4.1.6.

4.3.4.6 TMDL Summary

Table 29 through Table 33 present the total loading capacity, MOS, WLAs, and remaining watershed LAs for the two stream reaches that violate the MPCA's TP stream standard.

Table 29. Diamond Creek TP TMDL by Flow Zone (AUID - 528)

Diamond Creek: AUID 07010206-525		Flow Zones				
		Very High	High	Mid	Low	Dry
		Total Phosphorus Load (lbs./Day)				
WLAs	Total WLA	6.12	2.10	0.81	0.30	0.06
	Construction Stormwater	0.13	0.05	0.02	0.01	0.00
	Industrial Stormwater	0.07	0.02	0.01	0.00	0.00
	MS4 - Dayton	3.42	1.17	0.46	0.17	0.04
	MS4 - Rogers	2.46	0.84	0.33	0.12	0.03
	MS4 - Hennepin County	0.04	0.01	0.00	0.00	0.00
LAs	Total Load Allocations	6.62	2.27	0.88	0.32	0.07
	Upstream lake (Diamond Lake)	3.35	1.15	0.45	0.16	0.03
	Non-MS4 runoff	3.26	1.12	0.43	0.16	0.03
5% Explicit Margin of Safety (MOS)		0.67	0.23	0.09	0.03	0.01
Total Load (TMDL)		13.40	4.60	1.79	0.65	0.14
Existing Load		37.52	16.08	5.1	1.9	0.72
Estimated Reduction (%)		64	71	65	66	81

Table 30. South Fork, Rush Creek (Upper) TP TMDL by Flow Zone (AUID - 760)

Rush Creek, South Fork (Upper): AUID 07010206-760		Flow Zones				
		Very High	High	Mid	Low	Dry
		Total Phosphorus Load (lbs./Day)				
WLAs	Total WLA	3.70	1.27	0.47	0.16	0.11
	Construction Stormwater	0.19	0.07	0.02	0.01	0.01
	Industrial Stormwater	0.10	0.03	0.01	0.00	0.00
	MS4 - Corcoran	2.90	0.99	0.36	0.13	0.08
	MS4 - Medina	0.51	0.18	0.06	0.02	0.01
LAs	Total Load Allocations	14.50	4.97	1.82	0.63	0.42
	Non-MS4 runoff	14.50	4.97	1.82	0.63	0.42
5% Explicit Margin of Safety (MOS)		0.96	0.33	0.12	0.04	0.03
Total Load (TMDL)		19.16	6.56	2.41	0.83	0.56
Existing Load		48.99	27.92	12.81	5.45	1.65
Estimated Reduction (%)		61	77	81	85	66

Table 31. South Fork, Rush Creek (Lower) TP TMDL by Flow Zone (AUID - 732)

Rush Creek, South Fork: AUID 07010206-732		Flow Zones				
		Very High	High	Mid	Low	Dry
		Total Phosphorus Load (lbs./Day)				
WLAs	Total WLA	17.01	5.75	2.06	0.63	0.39
	Permitted Point Source Dischargers	0.25	0.25	0.25	0.25	0.25
	Construction Stormwater	0.38	0.13	0.05	0.02	0.01
	Industrial Stormwater	0.19	0.07	0.02	0.01	0.01
	MS4 - Corcoran	9.92	3.35	1.20	0.36	0.22
	MS4 - Medina	2.36	0.80	0.28	0.09	0.05
	MS4 - Maple Grove	4.10	1.38	0.49	0.15	0.09
	MS4 - Hennepin County	0.06	0.02	0.01	0.00	0.00
LAs	Total Load Allocations	19.22	6.49	2.32	0.70	0.43
	Non-MS4 runoff	19.22	6.49	2.32	0.70	0.43
5% Explicit Margin of Safety (MOS)		1.92	0.66	0.24	0.08	0.06
Total Load (TMDL)		38.41	13.15	4.87	1.66	1.13
Existing Load		98.56	56.17	25.76	10.97	3.31
Estimated Reduction (%)		61.03	76.60	81.12	84.85	65.94

Table 32. Rush Creek Mainstem TP TMDL by Flow Zone (AUID - 528)

Rush Creek, Mainstem: AUID 07010206-528		Flow Zones				
		Very High	High	Mid	Low	Dry
		Total Phosphorus Load (lbs./Day)				
Wasteload	Total WLA	30.43	8.71	2.24	0.23	**
	Permitted Point Sources	0.25	0.25	0.25	0.25	**
	Construction Stormwater	0.80	0.23	0.06	0.01	**
	Industrial Stormwater	0.40	0.12	0.03	0.00	**
	MS4 - Corcoran	11.79	3.37	0.87	0.09	**
	MS4 - Medina	2.06	0.59	0.15	0.02	**
	MS4 - Maple Grove	6.44	1.84	0.47	0.05	**
	MS4 - Rogers	4.61	1.32	0.34	0.03	**
	MS4 - Dayton	4.15	1.19	0.30	0.03	**
	MS4 - Hennepin County	0.09	0.03	0.01	0.00	**
	MS4 - MnDOT	0.09	0.03	0.01	0.00	**
Load	Total Load Allocations	44.03	12.61	3.24	0.33	**
	Upstream lake (Henry)	1.27	0.37	0.10	0.01	**
	Non-MS4 runoff	44.03	12.61	3.24	0.33	**
5% Explicit Margin of Safety (MOS)		4.00	1.15	0.31	0.04	0.0005
Total Load (TMDL)		79.98	23.09	6.13	0.86	0.01
Existing Load		386.85	97.27	24.15	4.50	0.14
Estimated Reduction (%)		79	76	75	81	93

** Allocation = flow contribution from a given source x 100 ug/l TP

Table 33. Elm Creek TP TMDL by Flow Zone (AUID - 508)

Elm Creek: AUID 07010206-508		Flow Zones				
		Very High	High	Mid	Low	Dry
		Total Phosphorus Load (lbs./Day)				
WLAs	Total WLA	39.33	15.09	6.91	3.74	2.45
	Permitted Point Sources	0.25	0.25	0.25	0.25	0.25
	Construction Stormwater	1.01	0.39	0.18	0.10	0.06
	Industrial Stormwater	0.50	0.19	0.09	0.05	0.03
	MS4 - Corcoran	8.76	3.37	1.56	0.85	0.56
	MS4 - Champlin	2.04	0.78	0.36	0.20	0.13
	MS4 - Dayton	13.27	5.08	2.32	1.25	0.81
	MS4 - Maple Grove	8.26	3.16	1.44	0.78	0.51
	MS4 - Medina	1.54	0.59	0.27	0.14	0.09
	MS4 - Rogers	3.38	1.30	0.59	0.32	0.21
	MS4 - Hennepin County	0.19	0.07	0.03	0.02	0.01
	MS4 - MnDOT	0.38	0.14	0.07	0.04	0.02
LAs	Total Load Allocations	35.23	13.49	6.16	3.31	2.16
	Upstream lakes (Rice, Diamond, Mud, Henry)	20.79	8.00	3.69	2.02	1.34
	Non-MS4 runoff	35.23	13.49	6.16	3.31	2.16
5% Explicit Margin of Safety (MOS)		5.04	1.94	0.90	0.49	0.32
Total Load (TMDL)		100.74	38.79	17.90	9.79	6.49
Existing Load		437.51	132.48	54.21	27.08	13.94
Estimated Reduction (%)		77.0	70.7	67.0	63.8	53.4

The WLA's assigned to the Maple Hills Estates WWTF for the phosphorus TMDL's for South Fork, Rush Creek (AUID –732), Rush Creek Mainstem (AUID -528), and Elm Creek (AUID -508) will require a reduction in effluent phosphorus concentration discharged from the facility from approximately 2.5 mg/l (2012 data) to no greater than 1 mg/l if the discharge rate remains the same. See Section 7.2.4 for a more detailed discussion of this issue. The exception to this is the TDLC in the "dry" flow zone for the Rush Creek mainstem (Table 33 above). Here, the loading capacity is very low due to the occurrence of very low flows in the flow record. Consequently, the permitted wastewater treatment design flows will exceed the stream flow in this flow zone. This means that the WWTF discharge would exceed the available loading capacity, based on the method described here to calculate the TMDL components. To account for this unique situation, the WLAs and LAs for this flow regime are expressed as an equation. The equation is:

Allocation = flow contribution from a given source x 1.0 mg/l TP

This approach effectively assigns a concentration-based limit to all discharges for the "dry" flow zone. Since there will be essentially no runoff in this flow zone anyway, permitted and non-permitted stormwater discharges should be essentially unaffected. The impact will be on any WWTF discharges from the Maple Hills Estates Facility.

5 Reasonable Assurance

The following should be considered reasonable assurance that implementation will occur and result in bacteria, nutrient, and sediment load reductions to the listed waters.

5.1 MPCA NPDES Permits

The issuance of an NPDES Permit provides reasonable assurance that the WLA's contained in a TMDL will be achieved. This is because 40 C.F.R. § 122.44(d)(1)(vii)(B), requires that effluent limits in permits be consistent with "the assumptions and requirements of any available WLA" in an approved TMDL. All of the municipalities comprising the Elm Creek Watershed project area are (or in the case of the city of Rogers, will be) covered under updated versions of the MS4 General Permit and the Construction Stormwater Permit, both of which became effective on August 1, 2013. Both permits mandate an increase in the volume of water that must be retained or abstracted on-site as well as require measures to minimize/address soil compaction, control flow rates to protect the stability of downstream open channels, provide buffers adjacent to surface waters, etc. In addition, the next MS4 General Permit (expected to be issued in 2018) will trigger a regulatory requirement for all MS4s receiving WLAs under this TMDL to demonstrate annual progress meeting the required load reductions. The MS4 Permit therefore provides an important regulatory link between a permittee's authorization to legally discharge stormwater to waters of the state and its progress in meeting its load reduction obligations under the TMDLs affecting it. The wastewater treatment system operated by Maple Hills Estate in Corcoran (NPDES/SDS Permit MN0031127) is the only permitted wastewater source discharger affected by this TMDL. The TMDL for TP will require an effluent limit to be determined and assigned through the NPDES Permit. More details regarding the permits in the Elm Creek Watershed can be found in section 7.

5.2 Elm Creek Watershed Management Commission

The ECWMC adopted its third generation watershed management plan on October 14, 2015. The updated plan supports the implementation elements of this TMDL through regulatory requirements for new and re-development, a public education and outreach program, a capital projects selection and funding process, and a monitoring program. The application of updated stormwater mitigation requirements to new urban/suburban developments in the watershed provides a cost-effective opportunity to significantly decrease pollutant loads relative to current conditions. As part of the third generation plan process, the Commission revised their development requirements for stormwater management to reflect the MIDs standards recommended by the MPCA. An analysis conducted to quantify the potential impact of implementing the revised standards indicated that very significant landscape load reduction of phosphorus, TSS and other pollutants could be achieved, especially where non-urban land uses with high pollutant export potential (such as pasture and cropland) were replaced with urban uses that fully incorporate the stormwater mitigation measures in the Commissions new standards. Despite the fact that the complete third generation plan was not finally approved for full implementation until October 2015, the Commission proceeded with an amendment of their second generation plan to adopt and implement the revised development standards effective January 1, 2015. This action helps demonstrate the commitment of the Commission to execute implementation elements in the TMDL.

For all TMDLs completed as part of this study, the resources are located within the ECWMC. The ECWMC was formed on February 1, 1973, through a joint powers agreement by Champlain, Corcoran, Dayton, Maple Grove, Medina, Plymouth, and the Hennepin Conservation District (now Hennepin County Environmental Services) under the authority conferred to the member parties through Minn. Stat. § 471.59 and 103B.211. The ECWMC has a comprehensive approach to managing water resources within their jurisdictional limits which includes the following:

- All significant development, redevelopment, industrial, and construction projects need to be designed to maintain or improve existing developed hydrology and pollutant loadings to fully comply with the local watershed and government authorities, NPDES, and anti-degradation requirements. The ECWMC currently implements rules that require construction site erosion and sediment controls, post-construction stormwater management, and permits for any wetland alterations.
- Although there have been several versions of the ECWMC's Watershed Management Plan, the most current version was adopted in 2015 and the ECWMC is expected to have another 10-year overall plan adopted in 2025.
- The current ECWMC rules and standards were adopted in 2015 and, among other items, include the stormwater management performance standards developed through the MPCA's Minimal Impact Design Standards (MIDS) project. The ECWMC plans to continue to implement initial abstraction requirements for development, redevelopment, and linear projects as they happen.
- The ECWMC implements a water quality monitoring program and intends to perform water quality trend analyses that will allow the Commission to track progress and guide adjustments in the implementation approach. In addition, the ECWMC contracts for routine aquatic plant surveys and will consider the management of aquatic plants based on this information.
- The ECWMC has recently started partnering with member communities on water quality improvement projects. An example of this partnering effort is the ECWMC capital improvements cost-share program, which provides funding to cover up to 25% of project capital costs to public entities for water quality improvement projects.

Additionally, all local units of government within the ECWMC are required to prepare a local watershed management plan, capital improvement program, and official controls as necessary to bring local water management into conformance with the ECWMC Watershed Management Plan. These local plans are reviewed and approved by the ECWMC.

5.3 Funding

Historically, a variety of funding sources have been used for water resource projects within the TMDL study area and these sources are expected to continue into the foreseeable future.

The ECWMC funds its operations mostly through assessments to member cities, which in turn raise those funds through either a tax levy imposed on residents or a special purpose stormwater utility fee. Revenue raised from these sources fund such ECWMC activities as public education and outreach, monitoring, and preparation of annual activity reports.

Capital improvement projects undertaken by the (ECWMC) can be funded through an ad valorem tax levy imposed through Hennepin County at the ECWMC's request on residents anywhere within the ECWMC jurisdictional limits. This annual tax levy is one of the main funding mechanisms available to

support for capital-related implementation activities within the impaired subwatersheds of this study. Funds generated through the ad valorem process are used to fund projects outright, sponsor cost-share projects with municipal partners, as well as provide cash matches to secure grants.

A third funding source available to the ECWMC was made possible by Minnesota voters approving the Clean Water, Land, and Legacy (CWLA) amendment in 2008. This amendment increased the state sales and use tax rate by three-eighths of 1% on all taxable sales, starting July 1, 2009, and continuing through 2034. Of the funds generated, approximately one third have been dedicated to a Clean Water Fund to, *"protect, enhance, and restore water quality is lakes, rivers, streams, and groundwater, with at least 5% of the fund targeted to protect drinking water sources."* (MPCA, 2014).

A fourth funding avenue available to support implementation of this TMDL study is the Clean Water Partnership (CWP) Program established by the Minnesota Legislature in 1987. The CWP program focuses on the control of non-point pollution sources and provides financial assistance through matching grant opportunities and loans, as well as technical assistance to local government units (LGUs).

The Federal Section 319 NPS Management Program was established through amendment to the Clean Water Act in 1987 and is recognizes as a fourth source of potential funding. Section 319 NPS funds support a wide variety of activities including technical and financial assistance, education, training, technology transfers, demonstration projects, and monitoring, to assess the success of specific NPS implementation projects. Section 319 projects are typically implementation-oriented and must offer a means of moving towards a resolution of a NPS pollution problem identified as part of a project. This can involve the implementation of a TMDL study to address impaired waters.

5.4 Schedule and Tracking

The ECWMC will work with its member communities to track the number, type, location, load reduction benefits, and costs of best management practices (BMPs) (with an emphasis on structural BMPs) that are implemented in the watershed to address this TMDL. The Commission expects to summarize this information annually and have it available for agencies and interested members of the public.

5.5 Other Considerations

The BMPs and other actions outlined in section 7 have all been demonstrated to be effective in reducing the generation and/or transport of pollutants to surface waters (MPCA 2014). Many of these actions are being promoted by state and local resource managers and have shown significant levels of adoption in both regulatory and non-regulatory environments.

Roughly 20% of the Elm Creek Watershed is expected to change from current land uses to rural residential land uses between 2010 and 2013, and hobby farms with livestock could be a significant component of that change. Good siting and management of new hobby livestock operations will be important to minimize the export of pollutants from these operations to surface waters. More discussion of BMPs recommended to address bacteria can be found in Section 7.

In addition, the technical advisory committee (TAC) formed to provide feedback and input for the project had broad representation from LGUs and agencies that are directly affected by the implementation recommendations. Citizens who have a direct stake in the success of the implementation strategy were also informed about the process and provided input. Their interest and

knowledge will help assure accountability in the implementation process. Finally, state and regional government representatives who will play a pivotal role in regulating and/or financially supporting many of the implementation elements were also involved in developing those elements.

Finally, a WRAPS has also been developed for the Elm Creek Watershed project area as a complementary effort to this TMDL. That document presents a detailed, locally-supported, MPCA-approved strategy for restoring the water bodies identified in this TMDL document as well as for protecting water bodies in the watershed that now meet state standards.

In summary, the regulatory efforts, non-regulatory planning efforts, and multiple funding sources detailed above collectively provide reasonable assurance that WLAs prescribed as part of this study will be implemented.

6 Monitoring Plan

Progress on TMDL implementation will be measured through regular periodic monitoring of water quality and tracking of the BMP's completed. This will be accomplished through the combined efforts of the organizations receiving allocations as well as the cooperating agencies (notably the ECWMC and MPCA). The Intensive Watershed Monitoring program conducted by the MPCA is expected to provide a large-scale, longer term picture of the degree to which conditions are changing in the Elm Creek Watershed. Monitoring by the MPCA under this program was last conducted in 2010 and is expected to be undertaken again in 2020 as part of the 10-year monitoring cycle. As part of its third Generation Watershed Management Plan, the Commission will adopt and fund a rotating sampling program for streams and lakes designed in part to monitor progress in implementing the TMDL.

A summary of the monitoring program to assess implementation progress is presented below.

6.1 Lake Monitoring

Fish Lake, Diamond Lake, Rice Lake will continue to be monitored at least every two years because of their visibility and priority as a public resource. The other lakes (Henry, Goose, Cowley, and Sylvan) will be monitored at least once every three years as access is made available and resources – either through volunteers or under contract with professional staff- are allocated. Lakes are generally monitored for chlorophyll a, TP, and Secchi disk transparency. Aquatic plant surveys should also be conducted on each lake at approximately five year intervals.

In-lake monitoring will continue as implementation activities are undertaken across the respective watersheds. These monitoring activities will continue until water quality goals are met. Some inflow monitoring has been completed on the inlets to some of the lakes (notably on Elm Creek above Rice Lake) and may be important to continue as implementation activities take place in those subwatersheds.

The DNR will continue to conduct fish surveys on lakes with developed public access (currently Fish Lake and Diamond Lake) as allowed by their regular schedule. Currently, fish surveys are conducted every five years.

6.2 Stream Monitoring

Stream monitoring in the Elm Creek Watershed, which includes Elm Creek, Rush Creek, and Diamond Creek, has been coordinated by the ECWMC. The Commission currently partners with the USGS to operate a flow and water quality monitoring station on Elm Creek. The station has a long-term period of record (35+ years) and gauges discharge from about 70% of Elm Creek Watershed. Other efforts have included those funded by the MPCA through a Surface Water Assessment Grant (SWAG) and the TMDL itself to carry out flow and/or water quality monitoring at the sites shown in Figure 3 in Section 3.2 of this report.

The Commission will continue to partner with the USGS to obtain routine flow and water quality data at the site on Elm Creek. As funding allows, monitoring will be carried out further upstream on Elm Creek as well as at some or all of the sites used to generate data for the TMDL. As BMP practices are implemented in the watershed, it is also suggested that monitoring will take place in those subwatersheds to track progress toward meeting the TMDLs for the stream reaches of interest.

6.3 Stream Biologic Monitoring

Continuing to monitor water quality and biotic communities so that composite metrics can be developed will help determine the need for/effectiveness of stream habitat restoration measures in bringing the watershed into compliance with standards for biota. At a minimum, fish and macroinvertebrate sampling should be conducted by the MPCA, DNR, or other qualified agencies every 5 to 10 years during the summer season at each established location until compliance is observed for two consecutive assessments.

7 Implementation Strategy Summary

7.1 Implementation Framework

The strategies described in this section include potential actions to reduce nutrient, bacteria, and sediment loads in the subject watersheds. The NPDES Permit compliance includes being consistent with the assumptions and requirements of an approved TMDL and associated WLA as they apply to the permittee. For the purposes of this TMDL, the baseline period will be approximately the mid-point in the data years used for lake response modeling (Table 34) and the development of the LDCs for bacteria, stream TP, and stream TSS (generally 2010). Any load-reducing BMP implemented since the baseline year (inclusive) will be able to count toward an MS4's load reductions. If a BMP was implemented during or just prior to the baseline year, the MPCA is open to presentation of evidence by the MS4 Permit holder to demonstrate that it should be considered as a credit.

Table 34. Implementation Baseline Years

Water Body	Baseline Year
Fish Lake	2010
Rice Lake	2010
Diamond Lake	2009
Goose Lake	2010
Cowley Lake	2006
Sylvan Lake	2012
Henry Lake	2010
Stream Bacteria TMDLs	2010
Stream Total Suspended Solids TMDLs	2010
Stream Phosphorus TMDLs	2010

7.2 Permitted Sources

7.2.1 MS4

There are nine jurisdictions within the Elm Creek Watershed project area that are permitted MS4s in the watershed.

Table 10 in Section 3.5 of this report identifies these jurisdictions and their MS4 Permit numbers.

Many of the watersheds of the impaired waters identified in this report are expected to undergo significant land use changes between now and 2030. Table 35 and Table 36 shows the approximate total area of the watersheds draining to the impaired stream reaches and lakes addressed in this report and the percentage of the area expected to change land uses by 2030. Further, in the stream systems, much of the development is likely to occur in the upper reaches of those systems which experience the most severe exceedances of bacteria, phosphorus, and (to a lesser extent) TSS. An improvement in the quality

of waters at the upstream end of these systems should contribute significantly to reducing the more moderate exceedances in the downstream reaches.

Table 35. Expected Land Use Change by Stream Reach Subwatershed

Subwatershed Name (AUID)	*Approximate Drainage Area*	*% of Drainage Area Expected to Change Land Use by 2030*[1]
S. Fork Rush Creek, Upper (AUID - 760)	6,700	68%
S. Fork Rush Creek, Lower (AUID - 732)	13,700	58%
Rush Creek Mainstem (AUID -528)	32,600	62%
Diamond Creek (AUID-525)[2]	3,600	30%
Lower Elm Creek (AUID -508)[3] below Rice Lake outlet	43,600	51%
Upper Elm Creek (AUID -508)[4] above Rice Lake outlet	13,000	30%

[1] From baseline year of 2010
[2] Excludes drainage area to Diamond Lake (~2,400 acres)
[3] Excludes drainage area to Rice (~16,100 ac.), Henry (~820 ac.), and Diamond lakes (~2,400 ac.)
[4] Excludes drainage to Rice Lake-West Basin and Rice Lake-Main Basin other than through Elm Creek (~3,100 ac.)

Table 36. Expected Land Use Change by Lake Subwatershed

Lake Subwatershed	*Approximate Drainage Area*	*% of Drainage Area Expected to Change Land Use by 2030*[1]
Cowley	830	60%
Sylvan	320	79%
Henry	820	61%
Diamond	2,400	32%
Rice	16.100	30%
Fish	1,600	<1%
Goose	240	5%

[1] From baseline year of 2010

To take advantage of the opportunity afforded by land use transition, aggressive stormwater management measures must be applied to new development everywhere in the watershed. Effective January 1, 2015, the ECWMC adopted updated standards that govern stormwater management standards for quality, runoff volume and rate control for new development projects. Key provisions of those updated standards are the following:

- A decrease in the threshold for application of stormwater quality and quantity standards to one acre of disturbed surface, regardless of land use. This will result in more new developments subject to the updated stormwater management requirements of the Commission.

- Require infiltration of 1.1 inches of runoff volume off new impervious surfaces within 48 hours, based on the MPCA's MIDs. Where infiltration is not feasible, the new rules require that runoff be filtered before discharge from the site. The rules include several credits toward meeting the abstraction requirement, including dis-connection of impervious surface, conservation of existing native vegetation, and the use of de-compacted and amended soil as a BMP.
- A performance standard for stormwater quality to achieve a loading reduction as good as or better than that which would be achieved by abstracting 1.1 inch of runoff depth from new impervious surfaces, or no-net increase in TP or TSS, whichever is lower. Application of the 1.1inch abstraction requirement equates to approximately a 76% reduction in TP compared to the post-development but non-mitigated phosphorus load from urban development (Wenck 2013), well above the 50% to 60% reduction typical of a wet detention pond based on NURP design standards. Compliance with this updated provision will require a calculation of the loading from the pre-development condition, then the load from the post-development condition assuming a 1.1-inch abstraction of impervious runoff from the post-development condition. The development must incorporate water quality BMPs to limit post-construction loading to the lesser of the two figures.

As regulated MS4 systems are expanded to serve new development, those MS4s may be able to take credit for working toward meeting their TMDL allocations based on net decreases in landscape loads associated with replacing high pollutant export non-urban uses with suburban/urban land uses that incorporate the stormwater controls identified. Commission should work with MPCA and the member communities to determine under what conditions this would be appropriate.

Other measures that should be considered by MS4s to meet their pollutant load reduction obligations under this TMDL include the following:

- Pursue stormwater treatment retro-fit projects as opportunities arise (for example as part of road/street re-construction, residential/commercial/industrial re-development, etc.), with an emphasis on runoff infiltration/filtration as site conditions allow
- Undertake intensified street cleaning activities in high priority areas, especially where opportunities for cost-effective implementation of structural BMP's is limited (Baker, et. al. 2014)
- Enhance existing stormwater treatment features, such as by adding iron enhanced sand filters to existing stormwater ponds.

7.2.2 Construction Stormwater

The WLA for stormwater discharges from sites where there is construction activity reflects the number of construction sites greater than one acre expected to be active in the watershed at any one time, and the BMPs and other stormwater control measures that should be implemented at the sites to limit the discharge of pollutants of concern. The BMPs and other stormwater control measures that should be implemented at construction sites are defined in the state's NPDES/SDS General Stormwater Permit for Construction Activity (MNR100001). If a construction site owner/operator obtains coverage under the NPDES/SDS General Stormwater Permit and properly selects, installs and maintains all BMPs required under the permit, including those related to impaired waters discharges and any applicable additional

requirements found in Appendix A of the Construction General Permit, the stormwater discharges would be expected to be consistent with the WLA in this TMDL. It should be noted that all local construction stormwater requirements must also be met.

7.2.3 Industrial Stormwater

The WLA for stormwater discharges from sites where there is industrial activity reflects the number of sites in the watershed for which NPDES Industrial Stormwater Permit coverage is required, and the BMPs and other stormwater control measures that should be implemented at the sites to limit the discharge of pollutants of concern. The BMPs and other stormwater control measures that should be implemented at the industrial sites are defined in the state's NPDES/SDS Industrial Stormwater Multi-Sector General Permit (MNR050000) or NPDES/SDS General Permit for Construction Sand & Gravel, Rock Quarrying and Hot Mix Asphalt Production facilities (MNG490000). If a facility owner/operator obtains stormwater coverage under the appropriate NPDES/SDS Permit and properly selects, installs and maintains all BMPs required under the permit, the stormwater discharges would be expected to be consistent with the WLA in this TMDL. It should be noted that all local stormwater management requirements must also be met.

7.2.4 Wastewater

The wastewater treatment system operated by Maple Hills Estate in Corcoran (NPDES/SDS Permit MN0031127) is the only permitted wastewater source discharger affected by this TMDL. The TMDL for stream TP will require a significant reduction in phosphorus loading from the facility. The WLA for TP assigned this facility will, at a minimum; require approximately a 60% load reduction from 2012 conditions. If the discharge volume for the facility to the Rush Creek-South Fork remains the same as currently (approximately .03 mgd), effluent concentrations for TP from the facility will need to decrease from approximately 2.5 mg/l (2012 data) to 1 mg/l. Another option is for the area served by the facility to hook up to a regional sanitary interceptor. The city of Corcoran has installed a trunk sewer that borders the south side of the mobile home park but it is not yet in use or connected to the Met Council's regional interceptor sewer. Construction of a force main and lift station to make the connection is planned for 2015 and may be available as early as 2016, however this plan may be delayed until the city of Corcoran needs to start using the pipe or until development picks up in the area served by the trunk sewer.

7.3 Non-Permitted Sources

7.3.1 Agriculture

Based on the livestock inventory completed for this project (Appendix A), there were an estimated 2,800 head of livestock in the Elm Creek Watershed in 2011, including beef and dairy cattle and horses. It was estimated that almost 70,000 lbs of manure-derived phosphorus was generated by livestock in the watershed in 2011, equal to over one pound per acre of watershed area. The amount of manure applied in the Elm Creek Watershed is likely substantial. Routine soil testing would help determine where manure can be applied to satisfy nutrient needs for crops while minimizing potential nutrient loss to runoff. Manure spreading on frozen ground during the winter is a common practice, with many operations having no manure storage facilities. Much of the nutrient content and organic matter is likely

lost to runoff when snowmelt events occur. Finally, livestock appear to have un-restricted access to streams in some reaches, which is likely to result in direct loading of bacteria and nutrients, and lead to bare or sparsely vegetated banks and riparian areas that foster streambank failures.

7.3.2 Rural Residential with Livestock

About 20% of the Elm Creek Watershed is expected to change from current land uses to rural residential land uses between 2010 and 2013, and hobby farms with livestock could be a significant component of that change. Good siting and management of new hobby livestock operations will be important to minimize the export of pollutants from these operations to surface waters. Where applicable, the MS4 communities within the watershed (especially those with high hobby farm development potential such as Corcoran, Dayton, and Rogers) should adopt standards modeled after those already adopted by the city of Medina. Those standards include the following components:

- Allowable locations of feedlots, pens, etc. relative to wetland edges as well as stream and lake shorelines.
- Requirements for the design and siting of manure storage, containment, and composting areas, and schedules for the removal of manure or compost from the affected sites.
- Clean water diversions to divert up gradient runoff around feedlot and manure containment areas.
- Site runoff retention and vegetative filtration systems downslope from the feedlot and manure containments areas.
- Pasture management requirements, including allowable livestock densities in pasture areas.

7.3.3 On-Site Septic Systems (ISTSs)

According to MPCA (2004), there is a 25% failure rate for septic systems in Hennepin County. The cities in the watershed are responsible for inspection of on-site septic systems and enforcement of standards, though some contract with the Hennepin County Department of Health to provide those services for them. In any case, the cities should continue to assure that systematic inspections are carried and that septic system upgrades are ordered as necessary, with priority given to systems that are imminent threats to public health and safety, and failing systems near-or whose discharge can reach- streams, waterways, and lakes.

7.3.4 Internal Nutrient Loads (Lakes)

Internal nutrient loads will need to be reduced to meet the TMDL allocations for all of the lakes addressed in this document. One source of internal loading is CLPW. The CLPW is present in most of the lakes addressed in this report, and in some cases at extremely high densities. Senescence of CLPW in summer can be a significant source of internal phosphorus load that often results in mid- to late-summer water quality degradation. Vegetation management, such as successive years of chemical treatments that selectively targets CLPW but does not negatively impact native aquatic plants, may be required to reduce CLPW growths to non-nuisance levels. Another source of internal load is release of accumulated phosphorus from enriched bottom sediments. While there are numerous options for internal load reduction, chemical inactivation of sediment phosphorus using an alum-based compound or another precipitant is likely to be most cost-effective. Ideally, most, if not all, of the watershed load reductions called for in the TMDL for a given lake should be achieved before sediment treatments occur.

However, in lakes that are close to meeting water quality standards, it may be appropriate to implement an initial sediment treatment as part of a two to three phase sediment treatment sequence once progress has been made in reducing watershed loads and/or curly-leaf pondweed generated loads. This approach can help generate a clear-water response that will improve the conditions for development of a robust rooted aquatic plant community and help stabilize the system in a clear water condition. This approach should only be taken with the understanding that fully achieving the targeted watershed load reductions will be important in extending the effective life of the internal load controls, and that the final internal load treatment in the sequence should be carried out only after substantial completion of the watershed load reduction effort.

7.4 Other Measures

The following measures will also be important elements of the implementation effort for this TMDL:

1. **Education**. Educational and outreach opportunities in the watershed should be pursued on such topics as fertilizer use, manure management, grazing management, low-impact lawn care practices, and other topics to increase awareness of sources of pollutant loadings to lakes and streams. A high priority of these efforts should be to encourage the adoption of good individual property management practices across all land uses. Also included should be efforts to educate the public on the benefits of a healthy rooted aquatic plant community and the role it plays in a healthy lake or stream system, along with appropriate management expectations, objectives and tools to manage the aquatic plant community without destroying the benefits it offers.
2. **Installation and enhancement of buffers/shoreline restoration.** One of the larger potential sources of *E. coli* and nutrient loading in the upper watershed is associated with pasture use. Installation of new or enhancement of existing buffers to maintain native vegetation along stream banks will help stabilize the streambanks themselves as well as filter runoff from pastures near streams and waterways. Many riparian property owners in all parts of the watershed maintain turf to the shoreline. Property owners should be encouraged/incentivized to restore a portion of their shoreline with native plants to reduce erosion, capture/filter direct runoff, and improve the near-shore riparian habitat that is so important to most of the desirable fish species found in lakes and streams.
3. **Roughfish management**. Where appropriate, monitoring and management of the fish community should be undertaken to restore or maintain quality fish communities. Opportunities to assess roughfish populations (particularly common carp) should be undertaken where there is reason to believe those populations are above the metrics conducive for clear water, native rooted aquatic plant-dominated in-lake condition and a healthy fish community. Control measures appropriate to the magnitude of the problem and the site-specific features of the situation should be undertaken to limit reproductive and recruitment success and roughfish migration.
4. **Biotic Integrity improvement strategies**. Physical habitat improvements in stream reaches with impaired biota will likely be necessary, based on the results of the SID. These improvements are likely to be diverse, including stabilizing eroding stream banks using bio-engineering techniques, improving stream re-aeration capabilities, re-establishing floodplain connectivity, and providing deep water higher oxygen refuges for desirable fish species in stream reaches where low DO episodes present a risk to the survival of those species.

5. **Subwatershed assessments**. The level of detail of the analysis conducted for this TMDL is not generally sufficient to identify specific parcels of neither land nor specific projects that are the most cost-effective for achieving load reductions to the water bodies identified. Additional effort to identify and evaluate potential projects will often be needed as a follow-up activity to this plan, especially for agricultural areas. These efforts should include on-the-ground field investigations to identify the highest priority areas for improvement, development of site-specific remedies, and development of project costs and load reduction benefits. The upper reaches of the Rush Creek Subwatershed appear to be a prime area to conduct such an effort because of the elevated concentrations of bacteria and phosphorus monitored the high concentration of livestock, and close proximity to conveyance features of some of those operations. An excellent example of a subwatershed assessment approach is an assessment completed by Hennepin County (2014) for the Dance Hall Creek Subwatershed of Lake Sarah in western Hennepin County. The outcome of the assessment effort can then be used as the basis to solicit cooperation from affected land owners, inform capital improvement project planning and implementation, and compile effective grant applications.
6. **High infiltration potential assessment**. Poor baseflow conditions and high streamflow volumes are issues throughout much of the Elm Creek Watershed, especially in some of the lower reaches of the major streams. Thus, taking advantage of areas that have a high infiltration capacity will be important in reducing runoff volumes and enhancing baseflows as the watershed develops. Consideration should be given to carrying out an assessment to identify these areas early so that the Commission and/or cities can work with the land owners to take advantage of these features as opportunities arise. Special attention should be given to stream corridors and the uplands within or immediately adjacent to them, as infiltrated water in these areas may be more likely to result in increased baseflows.
7. **Additional monitoring**. The magnitude of the reductions necessary to meet some of the TMDLs will be challenging, and continued periodic water quality monitoring will be necessary for evaluating progress in guiding the process. As per the SID report, additional monitoring should be conducted to describe the role of wetland complexes in low DO episodes in various stream reaches. Wetland-driven low DO conditions appear to be especially prevalent in the lower reaches of Elm Creek, and synoptic surveys are likely to be helpful in better defining the relationship between the two conditions. Finer scale monitoring efforts are also likely to have a role to play in identifying locations in specific watersheds that may be contributing a disproportionately high amount of loading to particular stream reaches. Again, synoptic approaches may be appropriate here as well, especially during or immediately after runoff events and perhaps as part of an overall subwatershed assessment.

7.5 Cost

All TMDLs are now required to include a cost estimate for implementing the necessary actions to restore the impaired waters identified in the TMDL. The level of detail of the information provided in a large-scale, watershed-wide TMDL like this one is not sufficient to provide a good basis for accurately identifying these costs. This TMDL provides explicit guidance on the magnitude of pollutant reductions to meet the requisite standard. However, the implementation strategy for this TMDL recognizes as well that specific projects will be identified -and credible estimates of the costs and benefits of those projects

developed - through the subwatershed assessments, feasibility studies, etc. as a follow-up to the TMDL. However, based on a review of the impairments and the scale at which restoration will be necessary in the watershed, it is estimated that a dollar range of $12,300,000 to $25,100,000 might be necessary. An identification of the types of projects and assumptions as well as whether each type of project applies to permitted, non-permitted, or both sources is included in Appendix H. Note that the cost range project is an estimate and many aspects can cause the costs to rise or fall as implementation takes place across the watershed.

7.6 Adaptive Management

The implementation strategies and elements focus will be carried out in the context of adaptive management (Figure 33). Continued monitoring and "course corrections" in response to technically sound monitoring results are the most appropriate strategy for attaining the water quality goals established in this TMDL. Management activities will be changed or refined to efficiently meet the TMDL and lay the groundwork for de-listing the impaired water bodies.

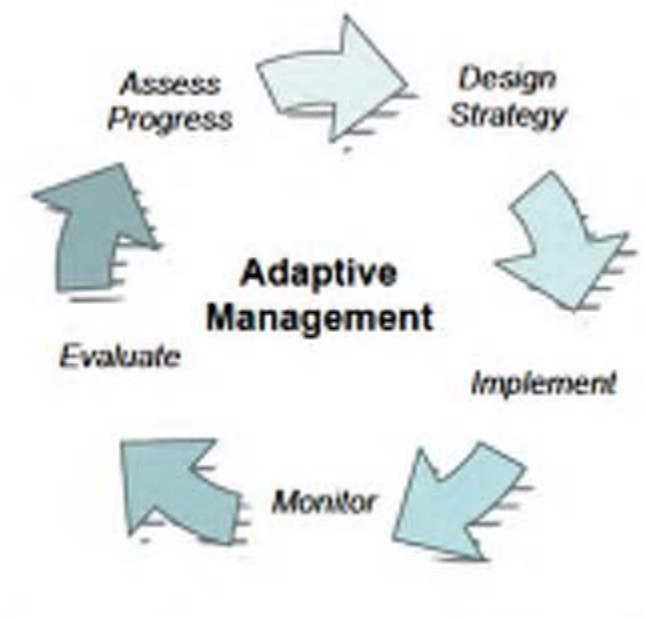

Figure 33. Adaptive Management Framework

8 Public Participation/Stakeholder Involvement

A stakeholder participation process was undertaken for this TMDL to obtain input from, review results with, and take comments from the public and interested/affected agencies and local jurisdictions regarding the development and conclusions of the TMDL. The following cities/agencies/interested parties were invited to project meetings and/or received communications regarding the project:

City of Champlin	Hennepin County
City of Corcoran	BWSR
City of Dayton	Met Council Environmental Services
City of Medina	DNR
City of Maple Grove	MnDOT
City of Plymouth	Rice Lake Area Association
City of Rogers	Fish Lake Area Residents Association
Maple Hills Estates	Diamond Lake Association

A TAC comprised of representatives from the cities and agencies listed above was at the core of the public participation process. This group has met 14 times since 2011 to review and provide feedback on the technical aspects of the project, including the modeling and technical analysis results, allocation methodologies, and implementation elements. Summaries of each meeting were prepared and distributed to the ECWMC and all participants, as well as posted on the Commission's web site. All Power Point presentations given at the meetings were posted on the Commission's web site as well.

Project staff also met separately with a number of organizations to explain the purpose of the project, as well as project findings, recommendation, and implications. These groups included:

City of Maple Grove Lakes Commission
Rice Lake Area Associations (annual meetings)
Fish Lake Area Residents Associations (annual meetings)
City officials from Dayton and residents around Diamond Lake
City of Champlin Environmental Resources Commission
City of Plymouth Environmental Quality Committee

Finally, as part of an amendment to the project scope in 2012, a Knowledge, Attitudes, and Practices (KAP) survey was conducted, which focused on three agricultural audiences (crop farmers, livestock operators, and horse owners), since the Commission knew relatively little about these stakeholder groups. The methods and results are summarized in Eckman (2013) (Appendix G).

The official TMDL public comment period was held from July 5, 2016 through August 4, 2016.

9 Literature Cited

Baker, L., P. Kalinosky, S. Hobble, R. Bintner, and C. Buyarski. 2014. Quantifying Nutrient Removal by Enhanced Street Sweeping.

Dewson, Z.S., A. James, and R. Death. 2007. A review of the consequences of decreased flow for instream habitat and Macro invertebrates. Journal of the North American Benthological Society, Vol. 26, No. 3. pp. 401-415.

Dodds, W.K. 2006. Eutrophication and Trophic State in Rivers and Streams. Limnology and Oceanography, Vol. 51, No. 1, Part 2: Eutrophication of Freshwater and Marine Ecosystems. pp. 671-680.

Eckman, K. 2013. Elm Creek Management Commission KAP Study Report

Hennepin County. 2014. Dance Hall Creek Subwatershed Stormwater Retrofit Assessment. October 2014. Prepared for City of Greenfield, MN

Lehr, R. 2015. Elm Creek Watershed Stressor Identification Report.

MPCA. 2004. 10-Year Plan to Upgrade and Maintain Minnesota's On-site (ISTS) Treatment Systems. Report to the 2004 Minnesota Legislature.

MPCA. 2005. Minnesota Lake Water Quality Assessment Report: Developing Nutrient Criteria, 3rd Edition. September 2005.)

MPCA. 2011. Recommendations and Planning for Statewide Inventories, Inspections of Subsurface Sewage Treatment Systems. Report to the Minnesota Legislature.

MPCA. 2011. Aquatic Life Water Quality Standards Draft Technical Support Document for Total Suspended Solids (Turbidity)

MPCA. 2012. Zumbro Watershed Turbidity TMDL, Section 3.7.1 New and Expanding Discharges.

MPCA. 2013. Minnesota Nutrient Criteria Development for Rivers.

MPCA. 2014. Guidance Manual for Assessing the Quality of Surface Waters for Determination of Impairment: 305(b) Report and 303(d) List-2014 Assessment and Listing Cycle.

MPCA. 2014. Minnesota Stormwater Manual.

MPCA. 2015. Twin Cities Metro Area Chloride Management Plan (draft) March 2015.

Poff, L., and J.D. Allan. 1995. Functional Organization of Stream Fish Assemblages in Relation to Hydrological Variability. Ecology, Vol. 76, No. 2. pp. 606-627.

Roy, A.H., M.C. Freeman, B.J. Freeman, S.J. Wenger, W.E. Ensign, and J.L. Meyer. 2005. Investigating hydrologic alteration as a mechanism of fish assemblage shifts in urbanizing streams. Journal of the North American Benthological Society, Vol. 24, No. 3, pp. 656-678.

U.S. Environmental Protection Agency. 2000. Stressor Identification Guidance Document. EPA document # 822-B-00-025.

Wenck. 2013. Change in Phosphorus Loading From Site Development. Technical Memorandum from R. Kluchhohn and E. Megow – Wenck Associates, Inc. to Elm Creek Watershed Management Commission-November 4, 2013

Appendices

Appendix A – Livestock Inventory for Elm Creek Watershed

Appendix B - Source Assessment Spreadsheets for Bacteria Impairments

Appendix C – Modeling Methods, Input, and Output for Lakes (including Lake Bathymetry)

Appendix D - Elm Creek SWAT Model Technical Memo

Appendix E – Vegetation Surveys for Lakes

Appendix F – Internal Phosphorus Loading and Sediment Phosphorus Fractionation reports

Appendix G - KAP Study Report

Appendix H – Implementation Cost Estimate

Appendix I – Affected MS4s by Impaired Water

Appendix A – Livestock Inventory for Elm Creek Watershed

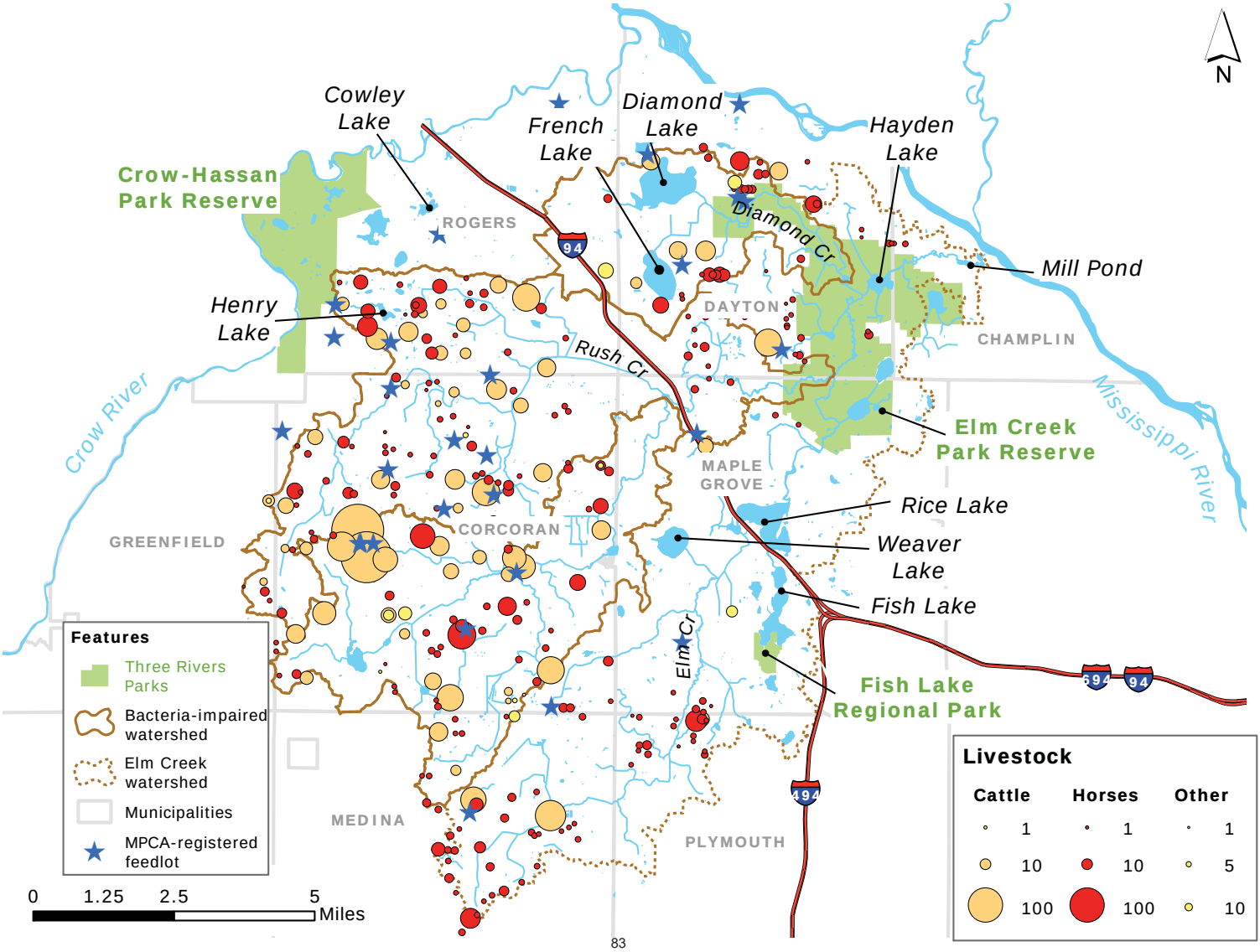

Appendix B - Source Assessment Spreadsheets for Bacteria Impairments

Category	Source	Animal Units or Individuals in Subwatershed	E. coli Organisms Produced Per Unit Per Month (Billions of Org.)	Total E.coliProduced Per Month (Billions of Org.)	Total E. coli Produced Per Month by Category (Billions of Org.)	Total E. coli Available Per Month by Category (Billions of Org.)	Percent by Category
Livestock (Surface Applied Manure)	Horses (Animal Units)	60-80	8	480 - 640	49,000 - 68,000	49,000 - 68,000	94.2%
	Cattle (Animal Units)	25-35	1,900	48,000 - 67,000			
	Other (Elk, Sheep, Hogs)	25-35	10	250 - 350			
Wildlife	Deer	120-140	10	1,200 - 1,400	2,400 - 2,800	2,400 - 2,800	4.2%
	Waterfowl	80-100	0.2	20 - 25			
	Other Wildlife	120-140	10	1,200 -1,400			
Human	Failing Septic Systems	10	40	400	400	400	0.6%
Domestic Animals	Improperly Managed Pet Waste	50-70	100	5,000 - 7,000	5,000 - 7,000	500 - 700	1.0%
					Total	52,000 - 72,000	100%

Pie Chart

94% Livestock

4% Wildlife

1% Human

1% Domestic Animals

Watershed	Total Area, Acres	Urban Area, acres	Number Residential Households	Population	Individual Septic Pa	Group Septic	Notables/ I	Cattle, 2011	Horses, 201	Other, 2011
DC	2,783.8	48	48	126	46	2	There is a c	30	70	26

	Subwatershed	Urban Area	Non-urbanized Area
Acres	2783.8	0	2783.8
Square Miles	4.3496875	0	4.3496875
Dogs	28.032		
Cats	30.624		
Septic	0.5		

Acre	Square Mile
1	0.0015625

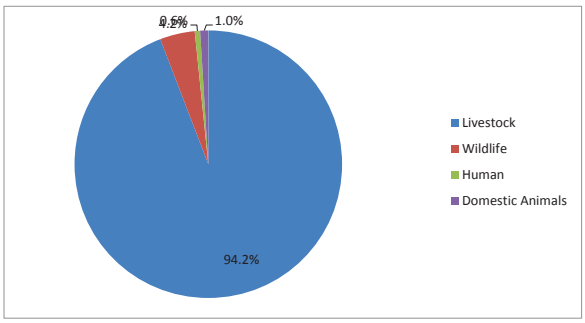

Category	Source	Animal Units or Individuals in Subwatershed	E. coli Organisms Produced Per Unit Per Month (Billions of Org.)	Total E.coliProduced Per Month (Billions of Org.)	Total E. coli Produced Per Month by Category (Billions of Org.)	Total E. coli Available Per Month by Category (Billions of Org.)	Percent by Category
Livestock (Surface Applied Manure)	Horses (Animal Units)	290 - 350	8	2,300 - 2,800	1,060,000 - 1,300,000	1,060,000 - 1,300,000	96.3%
	Cattle (Animal Units)	560 - 680	1,900	1,060,000 - 1,300,000			
	Other (Elk, Sheep, Hogs)	0 - 10	10	0 - 100			
Wildlife	Deer	760 - 920	10	7,600 - 9,200	16,000 - 19,000	16,000 - 19,000	1.4%
	Waterfowl	520 - 640	0.2	100 - 130			
	Other Wildlife	780 - 960	10	7,800 - 9,600			
Human	Failing Septic Systems	290	40	11,600	11,600	11,600	0.9%
Domestic Animals	Improperly Managed Pet Waste	1,400-1,800	100	140,000 - 180,000	140,000 - 180,000	14,000 - 18,000	1.3%
					Total	1,100,000 - 1,400,000	100%

Pie Chart

96% Livestock

1% Wildlife

1% Human

1% Domestic Animals

Watershed	Total Area, Acres	Urban Area, acres	Number Residential	Households	Population	Individual Septic Parcels	Group Septic	Notables/ I	Cattle, 2011	Horses, 201	Other, 2011
Rush Mainstem	18,470.7	470.8	1,363	1,321	3,712	1,164			619	321	4

	Subwatershed	Urban Area	Non-urbanized Area
Acres	18470.7	470.8	17999.9
Square Miles	28.86046875	0.735625	28.12484375
Dogs	771.464		
Cats	842.798		
Failing Septic	291		

Acre	Square Mile
1	0.0015625

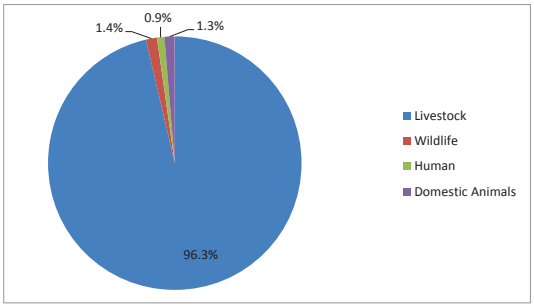

Category	Source	Animal Units or Individuals in Subwatershed	E. coli Organisms Produced Per Unit Per Month (Billions of Org.)	Total E.coliProduced Per Month (Billions of Org.)	Total E. coli Produced Per Month by Category (Billions of Org.)	Total E. coli Available Per Month by Category (Billions of Org.)	Percent by Category
Livestock (Surface Applied Manure)	Horses (Animal Units)	260 - 320	8	2,100 - 2,600	1,000,000 - 1,300,000	1,000,000 - 1,300,000	95.6%
	Cattle (Animal Units)	540 - 660	1,900	1,000,000 - 1,300,000			
	Other (Elk, Sheep, Hogs)	45 - 55	10	450 - 550			
Wildlife	Deer	530 - 650	10	5,900	12,000 - 13,000	12,000 - 13,000	1.0%
	Waterfowl	380 - 460	0.2	80 - 90			
	Other Wildlife	580 - 700	10	5,800 - 7,000			
Human	Failing Septic Systems	200	40	8,000	8,000	8,000	0.7%
	NPDES Permit	1	0.2	0			
Domestic Animals	Improperly Managed Pet Waste	2,800 - 3,400	100	280,000 - 340,000	280,000 - 340,000	28,000 - 34,000	2.7%
					Total	1,050,000 - 1,400,000	100%

Pie Chart

96% Livestock

1% Wildlife

1% Human

3% Domestic Animals

Watershed	Total Area, Acres	Urban Area, acres	Number Residential	Households	Population	Individual Septic Parcels	Group Septic	Notables/ I	Cattle, 2011	Horses, 201	Other, 2011
Rush South Fork	13,571.4	980.3	2,394	2,500	6,872	798	~186	Maple Hills	596	288	52

	Subwatershed	Urban Area	Non-urbanized Area
Acres	13571.4	980.3	12591.1
Square Miles	21.2053125	1.53171875	19.67359375
Dogs	1460		
Cats	1595		
Septic	199.5		

Acre	Square Mile
1	0.0015625

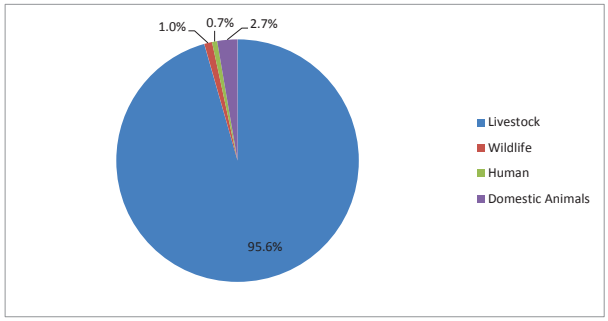

Category	Source	Animal Units or Individuals in Subwatershed	E. coli Organisms Produced Per Unit Per Month (Billions of Org.)	Total E.coliProduced Per Month (Billions of Org.)	Total E. coli Produced Per Month by Category (Billions of Org.)	Total E. coli Available Per Month by Category (Billions of Org.)	Percent by Category
Livestock (Surface Applied Manure)	Horses (Animal Units)	200 - 240	8	1,600 - 1,900	420,000 - 490,000	420,000 - 490,000	63.0%
	Cattle (Animal Units)	220 - 260	1,900	420,000 - 490,000			
	Other (Elk, Sheep, Hogs)	30 - 50	10	300 - 500			
Wildlife	Deer	450 - 550	10	4,500 - 5,500	17,000 - 20,000	17,000 - 20,000	2.5%
	Waterfowl	780 - 960	0.2	160 - 190			
	Other Wildlife	1,200 - 1,400	10	12,000 - 14,000			
Human	Failing Septic Systems	160	40	6,400	6,400	6,400	0.9%
Domestic Animals	Improperly Managed Pet Waste	22,000 - 27,000	100	2,200,000 - 2,700,000	2,200,000 - 2,700,000	220,000 - 270,000	33.6%
					Total	670,000 - 790,000	100%

Pie Chart

63% Livestock

3% Wildlife

1% Human

34% Domestic Animals

Watershed	Total Area, Acres	Urban Area, acres	Number Residential Households	Population	Individual Septic Par	Group Septic/	Notables/	Cattle, 2011	Horses, 201	Other, 2011
EC	27,680.5	16,824.4	18,842	20,017	53,880	618	240	226	40	

	Subwatershed	Urban Area	Non-urbanized Area
Acres	27680.5	16824.4	10856.1
Square Miles	43.25078125	26.288125	16.96265625
Dogs	11689.928		
Cats	12770.846		
Septic	154.5		

Acre	Square Mile
1	0.0015625

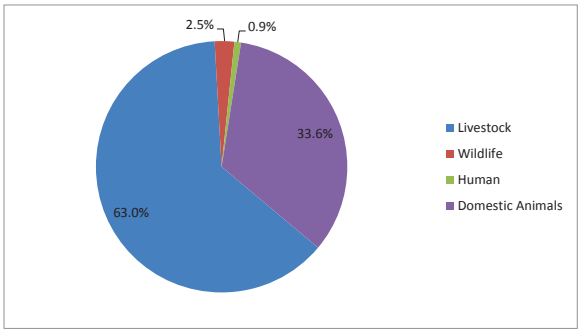

Category	Source	Animal Units or Individuals in Subwatershed	E. coli Organisms Produced Per Unit Per Month (Billions of Org.)	Total E.coliProduced Per Month (Billions of Org.)	Total E. coli Produced Per Month by Category (Billions of Org.)	Total E. coli Available Per Month by Category (Billions of Org.)	Percent by Category
Livestock (Surface Applied Manure)	Horses (Animal Units)	150 - 190	8	1,200 - 1,500	330,000 - 410,000	330,000 - 410,000	62.4%
	Cattle (Animal Units)	175 - 215	1,900	330,000 - 410,000			
	Other (Elk, Sheep, Hogs)	30 - 50	10	300 - 500			
Wildlife	Deer	250 - 310	10	2,500 - 3,100	11,000 - 14,000	11,000 - 14,000	2.1%
	Waterfowl	570 - 690	0.2	110 - 140			
	Other Wildlife	850 - 1050	10	8,500 - 10,500			
Human	Failing Septic Systems	25 - 35	40	1,000 - 1,400	1,000 - 1,400	1,000 - 1,400	0.2%
Domestic Animals	Improperly Managed Pet Waste	19,000 - 23,000	100	1,900,000 - 2,300,000	1,900,000 - 2,300,000	190,000 - 230,000	35.3%
					Total	530,000 - 650,000	100%

Pie Chart

62.4% Livestock

2.1% Wildlife

0.2% Human

35.3% Domestic Animals

Watershed	Total Area, Acres	Urban Area, acres	Number Residential Households	Population	Individual Septic Parce	Group Septic/	Notables/ F	Cattle, 2011	Horses, 201	Other, 2011
EC81	20,268.2	14,200.5	16,259	17,147	46,437	530	194	170	40	

	Subwatershed	Urban Area	Non-urbanized Area
Acres	20268.2	14200.5	6067.7
Square Miles	31.6690625	22.18828125	9.48078125
Dogs	10013.848		
Cats	10939.786		
Septic	132.5		

Acre	Square Mile
1	0.0015625

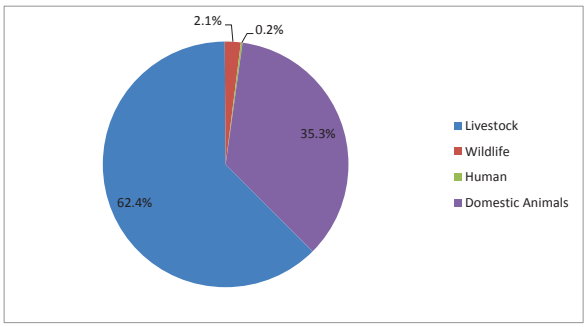

Watershed	Total Area, Acres	Urban Area, acres	Number Residential Parcels	Households	Population	Individual Septic Parcels	Group Septic/Onsite Treatment Households	Notables/ Residential Parcel Adjustment reason	Cattle, 2011	Horses, 2011	Other, 2011
DC	2,783.8		48	48	126	46	2	There is a community with a private treatment system south of Diamond Lake	30	70	26
EC	27,680.5	16,824.4	18,842	20,017	53,880	618			240	226	40
Rush Mainstem	18,470.7	470.8	1,363	1,321	3,712	1,164			619	321	4
Rush South Fork	13,571.4	980.3	2,394	2,500	6,872	798	~186	Maple Hills Estate Mobile Home Park	596	288	52

Fecal Coliform, monthly geomean (200 cfu standard)							
	April	May	June	July	August	September	October
2013	6.71	1	1	28.3	1		
2012	1	1	1	1	1	1.41	1
2011	1	1	1	1	1	1	1
2010	1	1	1	1	1	1	1
2009	1	1	1	1	1	1	1
2008	18.76	1	1	1	1	1	1
2007	1	1	1	1	1	1	1
2006	1	1	1	1	1	1.41	1
2005	5.39	5.2	28.28	20.2	1.41	10.2	1.73
2004	2.83	66.63	46.48	74.83	22.98	178	109
2003	4	2	5.1	18.97	5.29	30.5	3.16
2002	1	1	1	13.56	40	43.82	1.73

E. coli, monthly geomean (126 cfu standard)							
	April	May	June	July	August	September	October
2013	4.2273	0.63	0.63	17.829	0.63	0	0
2012	0.63	0.63	0.63	0.63	0.63	0.8883	0.63
2011	0.63	0.63	0.63	0.63	0.63	0.63	0.63
2010	0.63	0.63	0.63	0.63	0.63	0.63	0.63
2009	0.63	0.63	0.63	0.63	0.63	0.63	0.63
2008	11.8188	0.63	0.63	0.63	0.63	0.63	0.63
2007	0.63	0.63	0.63	0.63	0.63	0.63	0.63
2006	0.63	0.63	0.63	0.63	0.63	0.8883	0.63
2005	3.3957	3.276	17.8164	12.726	0.8883	6.426	1.0899
2004	1.7829	41.9769	29.2824	47.1429	14.4774	112.14	68.67
2003	2.52	1.26	3.213	11.9511	3.3327	19.215	1.9908
2002	0.63	0.63	0.63	8.5428	25.2	27.6066	1.0899

E. coli, cfu/100 mL (126 cfu standard)							
	April	May	June	July	August	September	October
2013	#REF!	19364643	18339176	535871187	18768442	0	0
2012	#REF!	19364643	18339176	18935378	18768442	25555606	18792290
2011	#REF!	19364643	18339176	18935378	18768442	18124543	18792290
2010	#REF!	19364643	18339176	18935378	18768442	18124543	18792290
2009	#REF!	19364643	18339176	18935378	18768442	18124543	18792290
2008	#REF!	19364643	18339176	18935378	18768442	18124543	18792290
2007	18482265	19364643	18339176	18935378	18768442	18124543	18792290
2006	18482265	19364643	18339176	18935378	18768442	25555606	18792290
2005	99619406	100696145	518631894	382494629	26463503	184870339	32510661
2004	52304809	1290266181	852404895	1416934310	431298786	3226168668	2048359559
2003	73929059	38729287	93529797	359204114	99285056	552798564	59383635
2002	18482265	19364643	18339176	256763721	750737660	794217478	32510661

E. coli, Billion cfu/100 mL (126 cfu standard)							
	April	May	June	July	August	September	October
2013	#REF!	0.019	0.018	0.536	0.019	0.000	0.000
2012	#REF!	0.019	0.018	0.019	0.019	0.026	0.019
2011	#REF!	0.019	0.018	0.019	0.019	0.018	0.019
2010	#REF!	0.019	0.018	0.019	0.019	0.018	0.019
2009	#REF!	0.019	0.018	0.019	0.019	0.018	0.019
2008	#REF!	0.019	0.018	0.019	0.019	0.018	0.019
2007	0.018	0.019	0.018	0.019	0.019	0.018	0.019
2006	0.018	0.019	0.018	0.019	0.019	0.026	0.019
2005	0.100	0.101	0.519	0.382	0.026	0.185	0.033
2004	0.052	1.290	0.852	1.417	0.431	3.226	2.048
2003	0.074	0.039	0.094	0.359	0.099	0.553	0.059
2002	0.018	0.019	0.018	0.257	0.751	0.794	0.033
Monthly Avg	#REF!	0.134	0.136	0.257	0.121	0.408	0.192
Yearly Avg	#REF!						

Monthly Flow Totals, MG							
	April	May	June	July	August	September	October
2013	0.768	0.796	0.777	0.796	0.791		
2012	0.775	0.812	0.769	0.794	0.787	0.76	0.788

Monthly Flow Totals, Gallons							
	April	May	June	July	August	September	October
2013	768,000	796,000	777,000	796,000	791,000	0	0
2012	775,000	812,000	769,000	794,000	787,000	760,000	788,000

Monthly Flow Totals, mL							
	April	May	June	July	August	September	October
2013	2,907,194,880	3,013,186,360	2,941,263,570	3,013,186,360	2,994,259,310	0	0
2012	2,933,692,750	3,073,752,920	2,910,980,290	3,005,615,540	2,979,117,670	2,876,911,600	2,982,903,080

Monthly Flow Totals, 100mL							
	April	May	June	July	August	September	October
2013	29,071,949	30,131,864	29,412,636	30,131,864	29,942,593	0	0
2012	29,336,928	30,737,529	29,109,803	30,056,155	29,791,177	28,769,116	29,829,031

Appendix C – Modeling Methods, Input, and Output for Lakes (including Lake Bathymetry)

1.0 Introduction

This section describes the modeling approach and information used to develop TMDLs for the lakes. It begins with an overview of the Bathtub model, which was the lake response model used for all seven lakes. Also presented are a description of the watershed, atmospheric, and internal loading inputs needed for the Bathtub model, and how those inputs were developed for each lake. The supporting appendix sections present the following detailed information for each lake:

C1 Lake Bathymetry and Bathtub Model Lake Morphometry Inputs

C2 Bathtub Model Tributary Loading Inputs

C3 Bathtub Model Internal and Atmospheric Loading Inputs

C4 Bathtub Model Nutrient Mass Balance

C5 Bathtub Model Calibration (Predicted vs. Observed)

C6 Bathtub Model Load Response Curves

C7 Bathtub Model Inputs and Outputs

The Bathtub model was developed to describe water quality conditions and estimate the assimilative capacity for the impaired lakes within the Elm Creek Watershed. The Bathtub model Version 6.20 developed by William Walker, Jr., Ph. D. for the Environmental Laboratory of the U.S. Army Corp of Engineers Waterways Experimental Station (1985 & 1996) was used for all in-lake response model simulations. The model estimates in-lake water quality conditions based on the lake morphological characteristics and a mass-balance of nutrient loading to the lake. This document was prepared to identify the methodology used for developing the in-lake response model for each impaired lake identified within the Elm Creek Watershed TMDL. The general modeling approach to determine the loading capacity for each impaired lake is outlined below and described in more detail in the following sections.

- Characterize the morphology of each lake as inputs into the Bathtub Model.
- Estimate the various sources of annual loading to the lake as inputs into the Bathtub model.
    - Watershed loading
    - Internal loading
    - Atmospheric loading
- Calibrate the Bathtub model to observed water quality conditions.
- Perform in-lake response model simulations to determine the loading capacity necessary to meet MPCA water quality standards.

The time period modeled was dependent on the availability of reliable monitoring data for years with average precipitation conditions within each lake's watershed. Average conditions for the watershed were defined as approximately 28 inches of total annual precipitation. Due to the differences in the time period of data collection and the amount of precipitation, the years used for model simulations varied for each lake. There were occasions in which the development of the bathtub model was dependent upon the average of multiple years of data collected with average precipitation conditions. The years that were used for development of the bathtub model for each lake are represented within Table C-1.

Table C-1: The years used for development of the Bathtub Model for each lake.

Lake	Modeled Years
Fish	2010-2012
Rice	2010-2012
Diamond	2010-2011
Cowley	2006
Henry	2009 & 2011
Sylvan	2012
Goose	2011-2012

2.0 Bathtub Model Lake Morphometry and Water Quality Inputs

The development of the Bathtub model requires the input of the morphological characteristics for each impaired lake within the Elm Creek Watershed. Each impaired lake was modeled as one segment within the Bathtub model. The morphological parameters that were input into the Bathtub model included the lake surface area, mean depth, mixed layer depth, length, and mean hypolimnetic depth. The mean hypolimnetic depth corresponds to late spring or early summer after the onset of stratification. The Bathtub model morphological characteristics are based on bathymetry measurements collected during aquatic vegetation surveys (Appendix E). Bathymetric maps were developed in ArcMap using Kriging analysis from the depth measurements, and spatial analysis was performed on lakes for determination of morphological characteristics. The Bathtub model bathymetry maps and morphological input for each lake is located Appendix C1.

The Bathtub model also requires the input of observed water quality data for each lake. The observed water quality data input into the Bathtub model was the growing season average for the time period modeled. The time period modeled was dependent on the availability of reliable monitoring data for years with average precipitation conditions. The years used for calculating the average observed water quality varied for each lake (Table C-1). The water quality monitoring data was collected by the Three Rivers Park District or through the Citizens Assisted Monitoring Program. The in-lake water quality data assists with the calibration of the Bathtub model. The Bathtub model is ultimately calibrated to the observed water quality conditions, and process of model calibration is further explained in Section 6.0. The Bathtub model water quality input for each lake is located within the Appendix C5.

3.0 Watershed Loading

The watershed load entered into the Bathtub model was developed from modeling analysis and/or monitoring data. The watershed models developed to estimate tributary loading to impaired lakes were the SWAT model (for areas with agricultural land use) and the P8 model (for areas with urban land use). These watershed models were developed within the Elm Creek hydrologic watershed boundary. The watershed models were calibrated to those areas that had monitored water quality data. Monitored data was occasionally used to represent the tributary loading in the lake response model when quality of the monitoring data was more reliable than watershed modeling results due to model limitations (model limitations further discussed in the Elm Creek SWAT modeling memorandum-Appendix D). The tributary loading data (monitored data versus modeling results) input into the in-lake response model corresponded with the time period that was used to develop the water quality inputs (Table C-1).

Those lakes within the Elm Creek watershed used either the watershed model output and/or water quality monitoring data to generate tributary loading inputs for the in-lake response model. For those lakes outside the Elm Creek hydrologic watershed boundary (Sylvan and Cowley), a unit area load method based on SWAT modeling for similar land uses within the hydrologic watershed was applied to generate watershed nutrient and water loads to each lake. The lakes to which this approach was applied had watershed land uses that were primarily rural/agricultural. An aggregation of the unit area loads per land use type was input as the tributary loading for the in-lake response model.

3.1 Description of Watershed Modeling Approach by Lake

The following sections summarize the watershed modeling approach taken for each lake.

3.1.1 Fish Lake

The Fish Lake watershed is primarily urban land use that has been entirely developed. A P8 model was developed for the entire Fish Lake watershed. The Fish Lake watershed was delineated into eight smaller sub-watersheds that would be used as tributary inputs into the in-lake response model (Figure C-1). A P8 model was developed to represent the loading from each of these sub-watersheds. There were four sub-watersheds that had reliable monitoring data collected in 2011. These sub-watersheds accounted for 62% of the total Fish Lake watershed. The P8 model was calibrated to the flow monitoring data from all four of these sampling sites (FL4, FL5, FL6, and FL7), and then calibrated to nutrient concentrations (i.e. total suspended solids and total phosphorus) from three of these sampling sites (FL4, FL5, and FL7). The P8 model calibration procedures used for the monitored sub-watersheds were then further adjusted for the remaining sub-watersheds in the P8 model. After the P8 model was calibrated, model simulations were performed to determine the annual flow volume and nutrient loading from 2010 through 2012. The model simulations from 2010 through 2012 represented average annual precipitation conditions. The average flow volume and nutrient concentration (2010-2012) from the P8 model simulations were input into the in-lake response model to represent the tributary loading for each sub-watershed (Appendix C2).

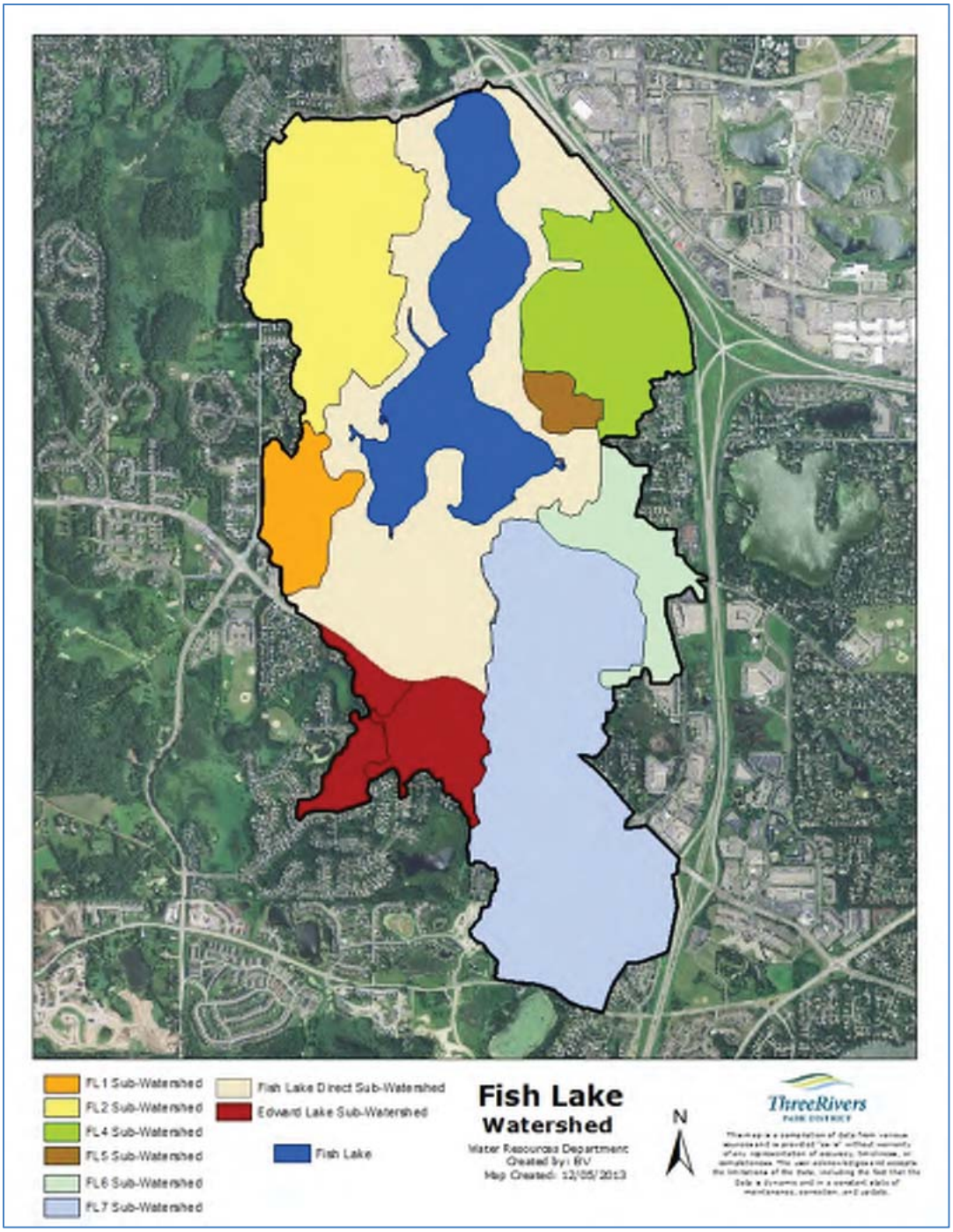

Figure C-1: Fish Lake sub-watershed boundaries for the development of the P8 model.

3.1.2 Rice Lake

The Rice Lake watershed required using modeling results and water quality monitoring data as tributary loading inputs into the in-lake response model. The Rice Lake watershed was divided into six major sub-watersheds (Figure C-2). Monitoring data was used for those sub-watershed areas with reliable flow and nutrient concentration data. The P8 model was used for those urban areas that did not have reliable monitoring data. The nutrient loading from model simulations and monitoring data represented average precipitation conditions from 2010 through 2012. The average flow volumes and nutrient concentrations (2010-2012) were input into the in-lake response model to represent the tributary loading for each sub-watershed (Appendix C2).

The Fish Lake sub-watershed (previously discussed) is a major drainage area that ultimately flows to Rice Lake (Figure C-2) and accounts for 9% of the Rice Lake watershed drainage area. A calibrated P8 model was developed for the entire Fish Lake watershed. It was assumed that the tributary flow volume draining into Fish Lake was similar to the outflow volume from Fish Lake to Rice Lake. The in-lake nutrient concentration for Fish Lake was used to represent the nutrient outlet concentration flowing to Rice Lake (Appendix C2).

The Elm Creek sub-watershed (Figure C-2) accounts for 72% of the entire Rice Lake drainage area. This sub-watershed flows to the west basin of Rice Lake (labeled as Elm Creek – monitored) upstream of the I-94 bridge (Figure C-2). Three Rivers Park District monitored continuous flow volume and nutrient concentrations at monitoring station EC-77 over a 6-year period from 2007-2012 (Figure C-2). The data from this site provided reliable flow and water quality monitoring data that was used to represent the tributary load from this portion of the watershed. There are two smaller sub-watersheds downstream from the EC-77 sampling site that account for approximately 8% of the Rice Lake watershed. These two sub-watersheds include the Weaver Lake sub-watershed and a sub-watershed immediately downstream from EC-77 to Rice Lake West Basin (labeled as Elm Creek to Rice Lake West Bay in Figure C-2). Freshwater Scientific monitored the water quality at a sampling site located at the furthest downstream section of these two sub-watersheds prior to draining into the southeast portion of Rice Lake West Basin (Figure C-2). The nutrient concentrations collected at the Freshwater Scientific sampling site in 2007 and 2008 were very similar to those concentrations monitored at the EC-77 sampling site. Based on similar concentrations from the two sites, it was assumed that nutrient concentrations at the EC-77 sampling site were similar to the Freshwater Scientific sampling site concentrations after 2008. Unfortunately, there was no reliable flow data collected at the Freshwater Scientific sampling site. A P8 model was developed to estimate the flow volume from the two sub-watersheds draining to the southeast portion of Rice Lake West Basin. The nutrient concentrations from the EC-77 sampling site and the P8 model flow volumes were used to represent the tributary (EC-P53) inputs for the in-lake response model (Appendix C2).

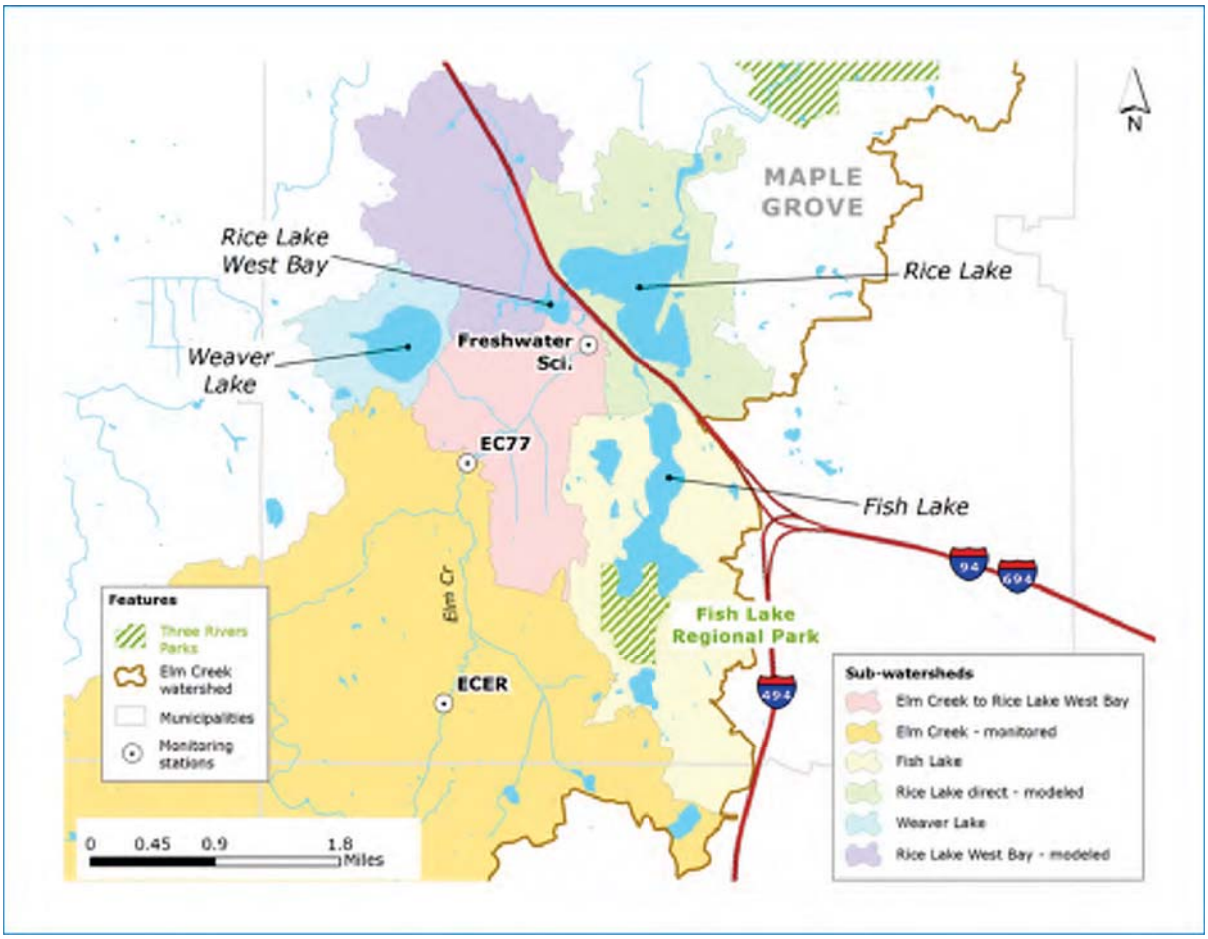

Figure C-2: Rice Lake sub-watersheds input into the in-lake response model.

The sub-watershed that drains the northwest portion of the Rice Lake West Basin accounts for approximately 8% of the Rice Lake watershed area (Figure C-2). This particular sub-watershed includes the direct drainage for the Rice Lake West Basin (labeled as Rice Lake West Bay – modeled). There were no monitoring sites established for this particular sub-watershed. Consequently, a P8 model was developed for the northwest and direct drainage areas to estimate flow volumes and nutrient concentrations. The flow volumes and nutrient concentrations from this sub-watershed represent the tributary loading inputs for the in-lake response model as Rice West Direct (EC-A79) and EC-P78 (Appendix C2).

The remaining sub-watershed includes the direct drainage into the Rice Lake Main Basin. This particular sub-watershed accounts for approximately 5% of the Rice Lake watershed area (Figure C-2). There were no monitoring sites established for this sub-watershed. A P8 model was also developed for this sub-watershed to estimate flow volumes and nutrient concentrations. The flow volumes and nutrient concentrations from this sub-watershed represent the tributary loading inputs for the in-lake response model as Rice Main Direct (EC-A89) and EC-P85 (Appendix C2).

3.1.3 Diamond Lake

The Diamond Lake watershed was primarily agricultural with portions of the watershed that also support industrial, commercial, and residential land uses. A SWAT model was developed for the entire watershed to simulate nutrient loading to Diamond Lake for years with average precipitation conditions (2010-2011). The SWAT model was developed for two sub-watersheds draining to Diamond Lake (Figure C-3). The SWAT model provided estimated flow volumes and nutrient concentrations for the sub-watershed that drains directly to Diamond Lake. The SWAT model was also used to estimate flow volumes and nutrient loads from the Grass Lake sub-watershed. Three Rivers Park District collected grab samples at bi-weekly to monthly intervals in 2013 at the outlet of Grass Lake to compare to SWAT modeling results. It was determined that the SWAT generated concentrations were considerably higher than the monitored nutrient concentrations. Consequently, average monitored nutrient concentrations collected in 2013 were used with the SWAT estimated flow volumes to generate loads from this sub-watershed. The average flow volumes and nutrient concentrations (2010-2011) represented the tributary loading inputs for the in-lake response model (Appendix C2).

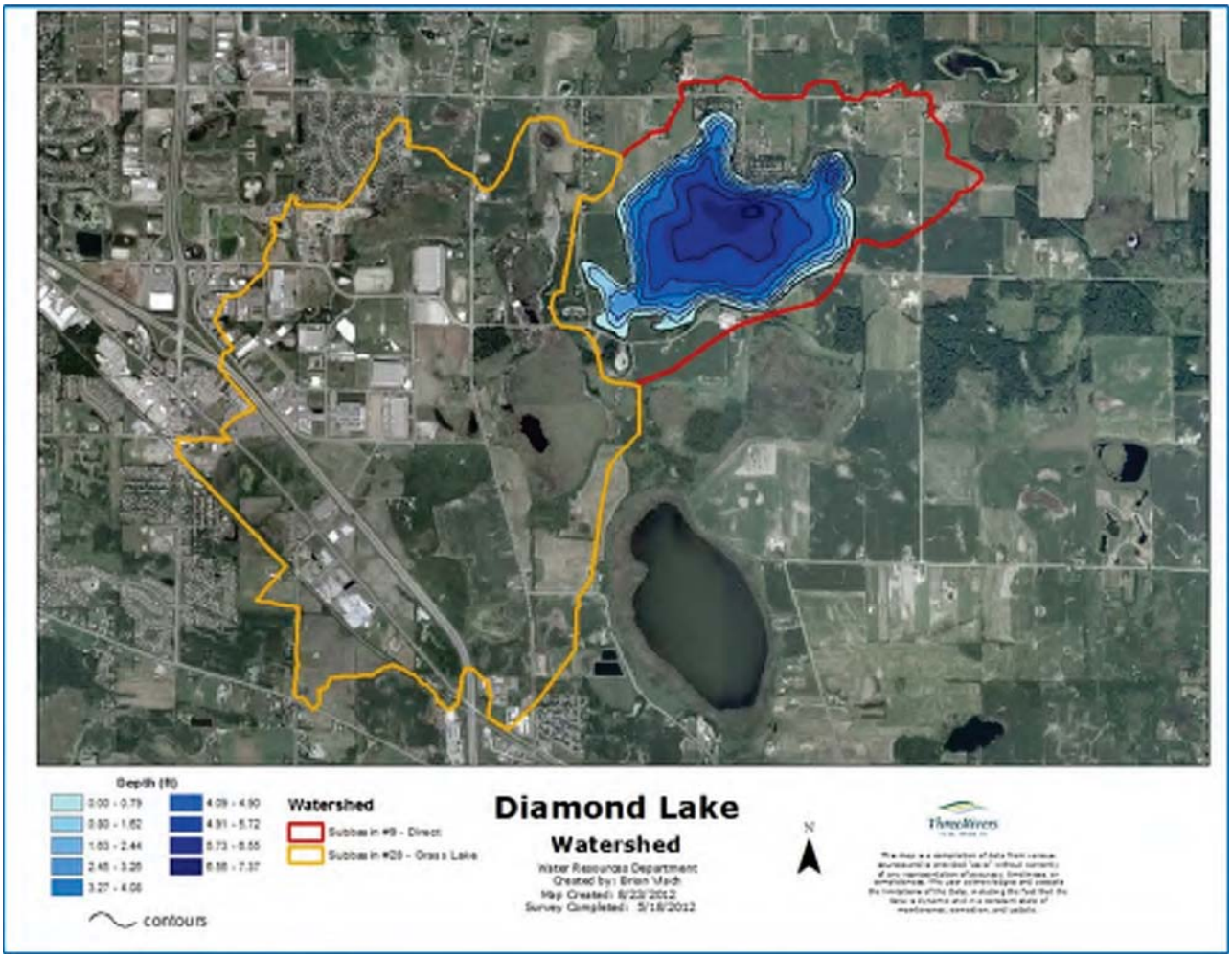

Figure C-3: Diamond Lake sub-watersheds input into the in-lake response model.

3.1.4 Cowley Lake

The Cowley Lake watershed consists of mostly agricultural land use located outside the hydrologic boundary of Elm Creek (Figure C-4). Since Cowley Lake is located outside of the Elm Creek hydrologic boundary, the unit area load method was used to represent the tributary loading within the Cowley Lake response model. Based on the SWAT modeling of similar land uses in the Diamond Creek watershed, an aggregation of the unit area loads per land use type was used to estimate watershed loading for the Cowley Lake response model (Appendix C2). Cowley Lake does not have an extensive in-lake water quality database. Consequently, the most reliable in-lake data available that was representative of average precipitation conditions was 2006.

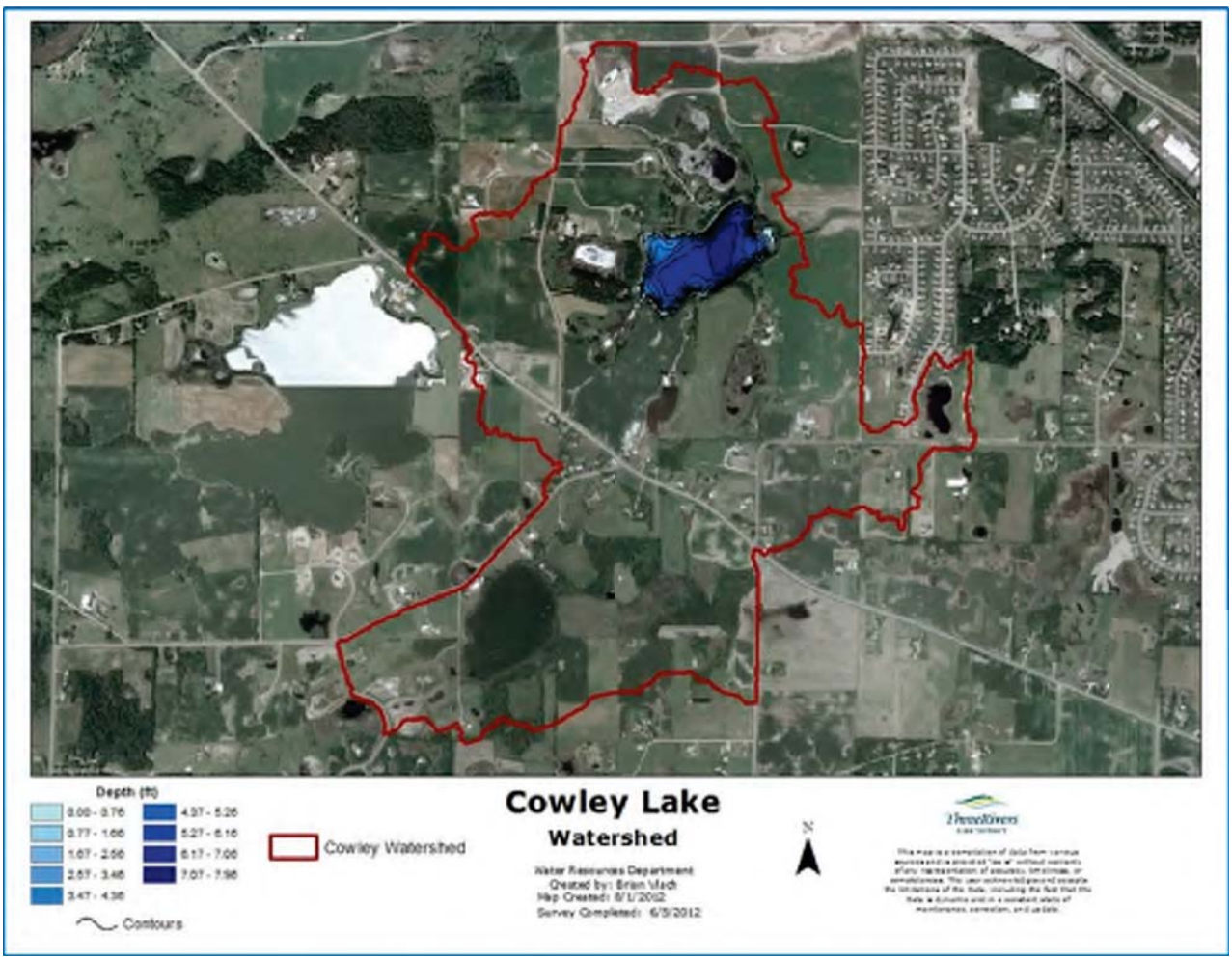

Figure C-4: Cowley Lake watershed.

3.1.5 Henry Lake

The Henry Lake watershed consists of primarily agricultural land use (Figure C-5). A SWAT model was developed for the entire watershed to simulate nutrient loading to Henry Lake for years with average precipitation conditions (2009 & 2011). The average flow volumes and nutrient concentrations from the SWAT model simulations (2009 & 2011) were input as tributary loading for the in-lake response model (Appendix C2).

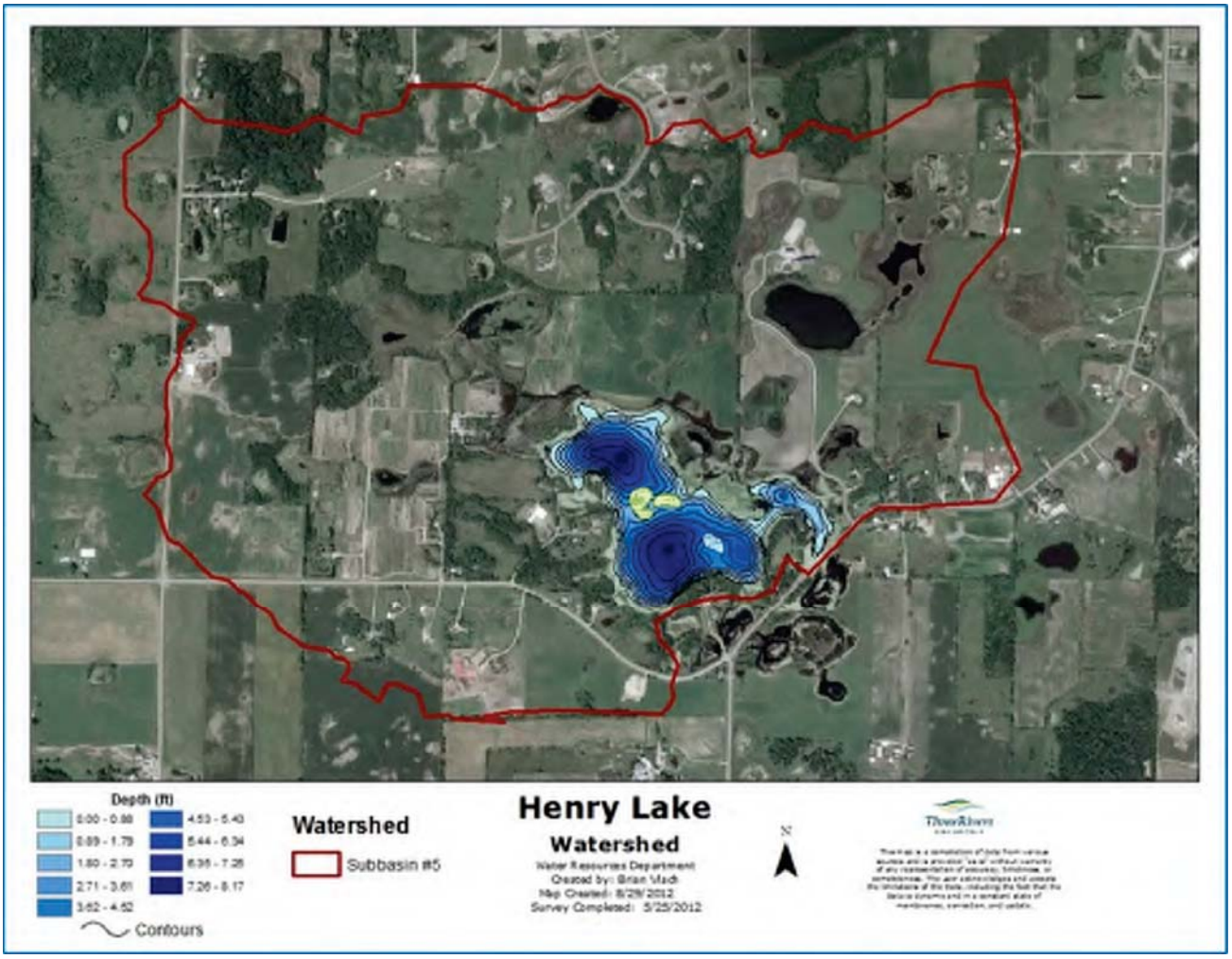

Figure C-5: Henry Lake watershed.

3.1.6 Sylvan Lake

The Sylvan Lake watershed consists of agricultural land use located outside of the Elm Creek hydrologic boundary (Figure C-6). Similar to the approach used for modeling Cowley Lake, the unit area load method was used to generate the tributary loading within the Sylvan Lake response model. Based on SWAT modeling of similar land uses in the Diamond Lake watershed, an aggregation of the unit area loads per land use type was input as the tributary loading for the Sylvan Lake response model (Appendix C2). Sylvan Lake does not have an extensive in-lake water quality database. Consequently, the most reliable in-lake data available that was representative of average precipitation conditions was 2012.

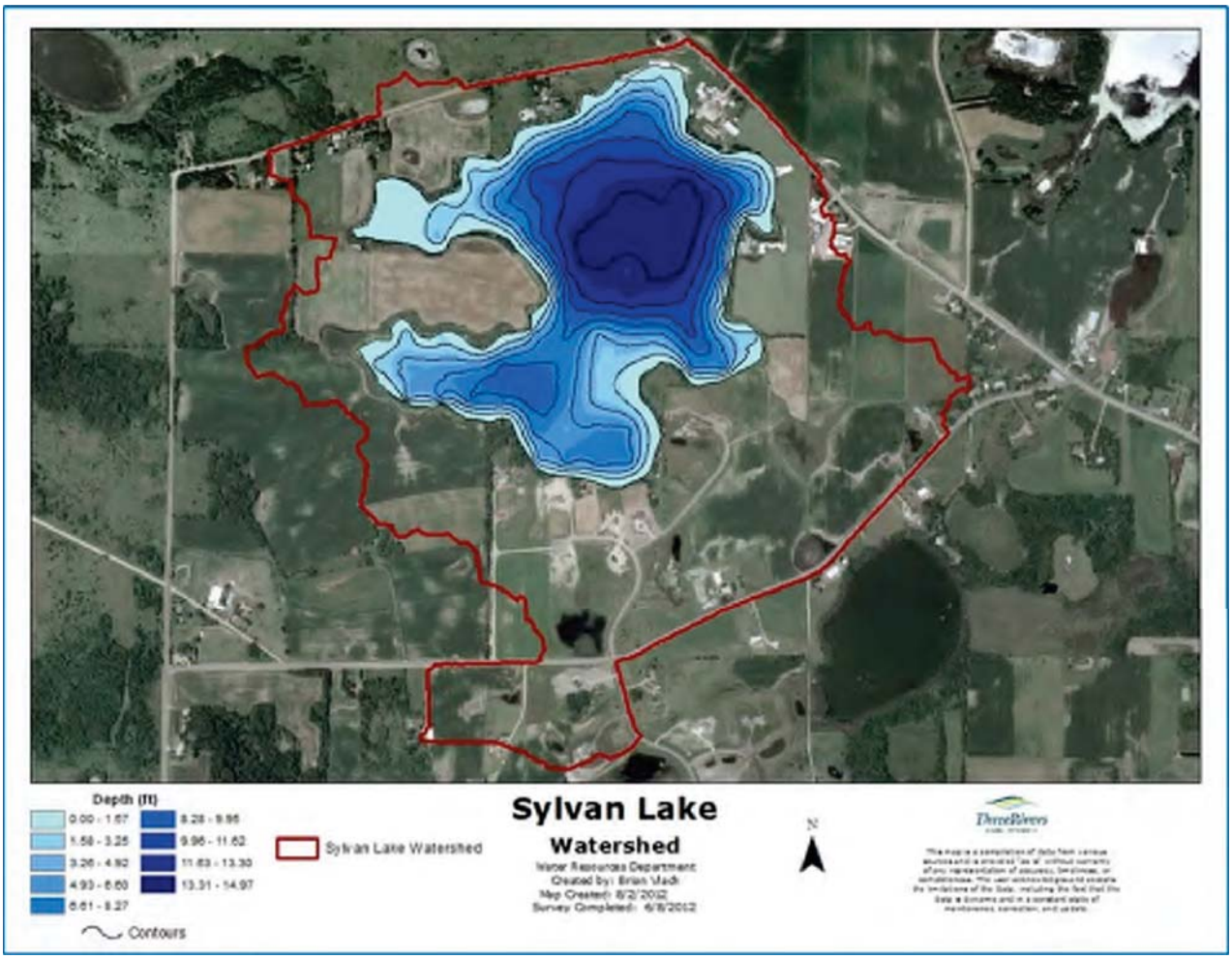

Figure C-6: Sylvan Lake watershed.

3.1.7 Goose Lake

The Goose Lake watershed consists of primarily park and residential land use (Figure C-7). The Goose Lake watershed was delineated into six smaller sub-watersheds. A P8 model was developed to represent the watershed loading for each of these sub-watersheds. There was no watershed monitoring data collected to calibrate the P8 model. The same calibration adjustment factors used for the Fish Lake P8 model were also used for the Goose Lake P8 model. The P8 model was used to determine the annual flow volume and nutrient concentrations for average precipitation conditions in 2011 and 2012. The average flow volume and nutrient concentration (2011 and 2012) from the P8 model simulations were input into the in-lake response model to represent the tributary loading for each sub-watershed (Appendix C2).

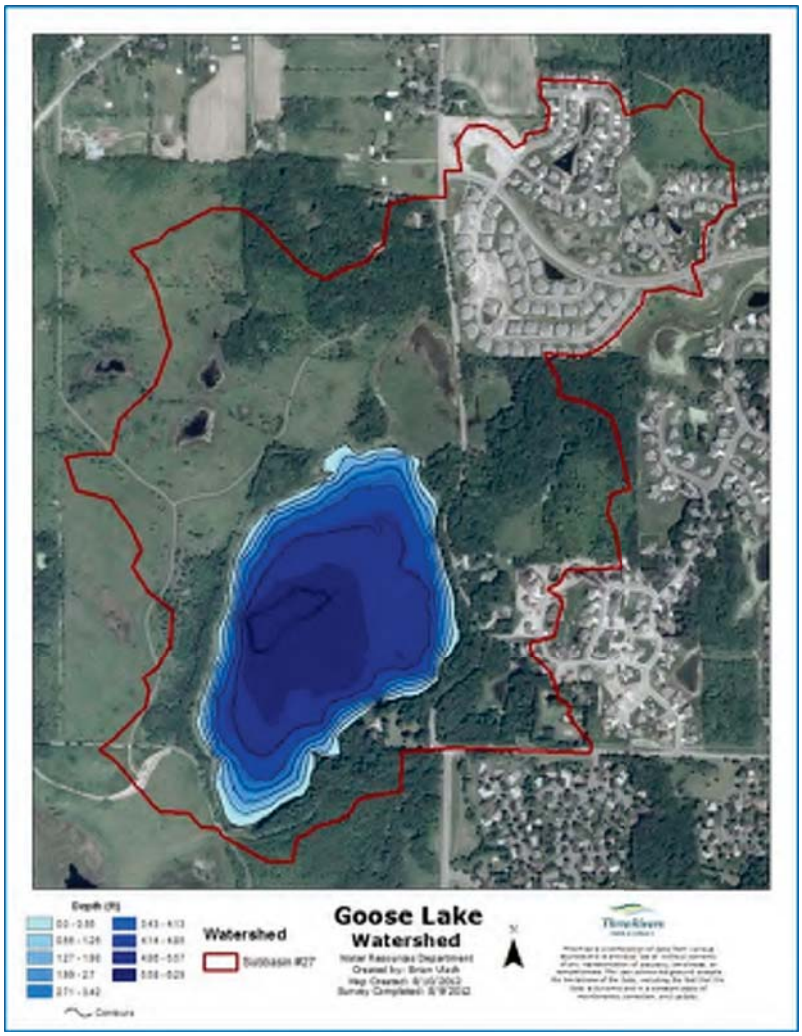

Figure C-7: Goose Lake watershed.

4.0 Internal Loading

There were two primary sources of internal loading that were considered for the in-lake response model. The phosphorus loading from sediment release during anoxia and senescence of curly-leaf pondweed were estimated for each impaired lake. These estimates of internal loading were aggregated and compared to the internal loading estimates used as an input into the Bathtub model. The internal loading estimate input into the Bathtub model was part of the phosphorus calibration of the in-lake response model (see calibration section for more details). The process of estimating the internal load of each source is described below.

Sediment Release of phosphorus due to hypolimnetic anoxia

Sediment release of phosphorus is initiated by hypoxic/anoxic conditions in the hypolimnion during stratification. Phosphorus released from the sediment diffuses throughout the water column as stratification changes throughout the growing season. Typically, wind mixing and temperature changes are mechanisms that exacerbate the internal diffusion of nutrients from the hypolimnion to epilimnion. Phosphorus from sediment release in the hypolimnion was estimated using an approach developed by Nürnberg et al. (1988 and 1994). The Nürnberg equation calculates internal phosphorus load by using sediment release rates (RR) multiplied by an anoxic factor (AF) that is based on the area and duration of hypolymnetic anoxia (Equations 1 & 3). The anoxic factor represents the number of days that a sediment area, equal to the whole-lake surface area, is overlain by anoxic water (<1 mg O_2/L). Nürnberg (1987) developed an equation to estimate the anoxic factor from a data set of lakes in central Ontario and eastern North America (Equation 2). The anoxic factor equation (Equation 2) was used for those lakes that did not have temperature and dissolve oxygen profile data.

Equation 1:

Internal Loading Rate (mg/m^2-yr) = AF * RR

AF = Anoxic Factor (days/year)

RR = Sediment Release Rate (mg/m^2-day)

Equation 2:

Anoxic Factor (days/yr) = $-36.2 + 50.1 \log(TP) + 0.762 * Z/A^{0.5}$

TP = Average summer in-lake TP Concentrations (µg/L)

Z = lake mean depth (m)

A = lake surface (km^2)

Equation 3:

Internal Load = Internal Loading Rate (EQ1) * Hypolimnetic Anoxia Area (m^2)

Typically, sediment release rates are derived from laboratory incubation experiments with in-lake sediment cores. Sediment cores were collected on three lakes within Elm Creek watershed (Fish, Rice, and Diamond Lake). Sediment release rates were measured by William James from the University of Wisconsin-Stout in Menomonie, Wisconsin. Those remaining lakes that did not have sediment cores

collected (Cowley, Henry, Sylvan, and Goose) required using sediment release rates previously measured from lakes with similar eutrophic water quality conditions (Bischoff and James 2012; data base of 102 lakes). Bischoff and James (2012) documented differences in sediment release rates for shallow lakes that were algal- and plant-dominated (Water Resources Conference 2012). Those lakes that did not have sediment core data were classified as algal or plant dominated shallow lakes based on aquatic vegetation surveys (Appendix E). Internal loading was estimated for these shallow lakes as a minimum (lower quartile – 25th percentile) and maximum (upper quartile – 75th percentile) range based on sediment release rates from Bischoff and James 2012 algal and plant dominated data (Table C-2).

Table C-2: Sediment release rates for plant and algal dominated lakes (Bischoff and James 2012).

	Sediment Release Rates (mg/m^2-day)		
	Anoxic		
Shallow Lake Condition	**Minimum**	**Maximum**	**Oxic**
Plant Dominated	0.5	3.5	0.1
Algal Dominated	5.8	9.8	0.3

Senescence of curly-leaf pondweed

Curly-leaf pondweed is a significant factor inhibiting recreational use as well as potentially degrading the in-lake water quality. Curly-leaf pondweed is an exotic species that typically competes with other native plant species because of its unique life cycle. The plant germinates from turions (seed structures) in early fall when most native plants have died back, and the plant continues to grow slowly during the winter months. Curly-leaf pondweed growth increases substantially after ice-out due to an increase in light availability. The plant begins to die-off (called senescence) after the completion of turion production by the end of June or early July. The senescence of curly-leaf pondweed provides an internal source of nutrients within several impaired lakes of the Elm Creek watershed. Nutrients released from the senescence process are in a soluble form readily available for algae uptake. Consequently, algae blooms frequently develop causing a decrease in water clarity. The senescence of curly-leaf pondweed exacerbates the eutrophication process by causing poor water quality conditions earlier in the season.

To estimate the amount of internal loading from curly-leaf pondweed senescence, Three Rivers Park District performed phosphorus analysis on curly-leaf pondweed biomass samples collected from a 1-m^2 quadrant survey that was performed on a lake (Medicine Lake) with nuisance growth conditions (Vlach and Barten 2004). The survey provided an average estimate of curly-leaf pondweed phosphorus per unit area sampled (grams dry-weight/m^2). This estimate was converted to the average pounds of phosphorus/acre (Table C-3) and multiplied by the acreage of curly-leaf pondweed for a particular lake.

Table C-3: Total Phosphorus Loading estimates from curly-leaf pondweed (Vlach and Barten 2004).

Curly-leaf Pondweed Senescence	**Average Biomass (g dry weight/m^2)**	**Average TP Concentration (mg/g dry weight)**	**Average Load (lbs TP/Acre)**
Minimum Load	38.6	4.91	1.65
Maximum Load	83.4	4.8	3.19

4.1 Description of Internal Load Estimation Approach by Lake

The following sections summarize the internal load estimation approach taken for each lake.

4.1.1 Fish Lake Internal Load

Three Rivers Park District collected sediment cores in two different locations on Fish Lake in 2012. William James from the University of Wisconsin STOUT laboratory analyzed anoxic sediment phosphorus release from the core samples (James 2013) (Table C-4). The oxic sediment release was considered to be minimal and was not analyzed from the sediment cores. The anoxic sediment release rates were similar between the two sampling sites. The Nürnberg equation (1988) was used to estimate the internal loading of Fish Lake using the average anoxic sediment release rates (7.6 mg/m^2/day). Based on the Nürnberg equation, the estimated internal loading from anoxic sediment release for Fish Lake was approximately 1406 pounds of phosphorus (Table C-4). Aquatic vegetation surveys indicated that there doesn't appear to be a significant influence of curly-leaf pondweed senescence on internal load (Appendix E). Therefore, curly-leaf pondweed was not considered a significant component to the total internal load. The internal load that was required to calibrate to the in-lake total phosphorus concentration for the BATHTUB model was approximately 1577 pounds (Appendix C3). This internal load required to calibrate the BATHTUB model was very similar to the estimated internal loading from the Nürnberg equation.

Table C-4: Fish Lake estimated annual internal load from anoxic sediment release rates.

	Total Phosphorus	
Location	Anoxic Sediment Release Rate (mg/m^2/day)	Estimated Internal Load (lbs/year)
Site 1	6.3	1165.8
Site 2	8.9	1646.9
Average	7.6	1406.3

4.1.2 Rice Lake Internal Load

Three Rivers Park District collected sediment cores at one location on Rice Lake Main Basin in 2012. William James from the University of Wisconsin STOUT laboratory analyzed anoxic and oxic sediment phosphorus release from the core samples (James 2013) (Table C-5). The Nürnberg equation (1988) was used to estimate the internal loading of Rice Lake using the anoxic and oxic sediment release rates. Based on the Nürnberg equation, the estimated internal loading from anoxic sediment release was approximately 1836.6 pounds of phosphorus, and estimated internal loading from oxic sediment release was approximately 247.0 pounds of phosphorus (Table C-5). Aquatic vegetation surveys indicated that curly-leaf pondweed senescence appears to be a significant influence on internal load (Appendix E). The senescence of curly-leaf pondweed may potentially contribute an additional 506.6 to 979.3 pounds of phosphorus to the internal load (Table C-6).

Table C-5: Rice Lake – Main Basin annual internal load estimate from anoxic and oxic sediment release.

Conditions	Total Phosphorus	
	Sediment Release Rate (mg/m2/day)	Estimated Internal Load (lbs/year)
Anoxia	9.45	1836.6
Oxic	1.17	247.0
Total		2083.6

Table C-6: Rice Lake – Main Basin annual internal load estimate attributed to curly-leaf pondweed senescence.

Condition	CLP Load (lbs/acre-year)	Surface Area (acres)	Load (lbs/year)
Minimum Load	1.65	330	544.5
Maximum Load	3.19	330	1052.7

The total internal phosphorus load from sediment release and curly-leaf pondweed was estimated to range between 2628.1 and 3136.3 pounds per year. The internal load that was required to calibrate to the in-lake total phosphorus concentration for the BATHTUB model was approximately 3270.3 pounds (Appendix C3). This internal load required to calibrate the BATHTUB model was very similar to the estimated internal loading from the Nürnberg equation and senescence of curly-leaf pondweed.

4.1.3 Diamond Lake Internal Load

Three Rivers Park District collected sediment cores at two locations on Diamond Lake in 2012. William James from the University of Wisconsin STOUT laboratory analyzed anoxic and oxic sediment phosphorus release from core samples (James 2013) (Table C-7). The anoxic and oxic sediment release rates were similar between the two sampling sites. The Nürnberg equation (1988) was used to estimate the internal loading of Diamond Lake using the average anoxic and oxic sediment release rates. Based on the Nürnberg equation, the estimated internal loading from anoxic sediment release was approximately 49.9 pounds of phosphorus, and estimated internal loading from oxic sediment release was approximately 48.4 pounds of phosphorus (Table C-7). Aquatic vegetation surveys indicated that curly-leaf pondweed senescence appears to be a significant influence on internal load. The senescence of curly-leaf pondweed may potentially contribute an additional 641.4 to 1240.0 pounds of phosphorus to the internal load (Table C-8).

Table C-7: Diamond Lake annual internal load estimate from anoxic and oxic sediment release.

Conditions	Total Phosphorus	
	Sediment Release Rate (mg/m2/day)	Estimated Internal Load (lbs/year)
Anoxia	3.2	49.9
Oxic	0.1	48.4
Total		98.3

Table C-8: Diamond Lake annual internal load estimate attributed to curly-leaf pondweed senescence.

Condition	CLP Load (lbs/acre-year)	Surface Area (Acres)	Load (lbs/year)
Minimum Load	1.65	388.7	641.4
Maximum Load	3.19	388.7	1240.0

The total internal phosphorus load from sediment release and curly-leaf pondweed was estimated to range from 739.7 and 1338.3 pounds per year. The internal load that was required to calibrate to the in-lake total phosphorus concentration for the BATHTUB model was approximately 796.5 pounds (Appendix C3). This internal load required to calibrate the BATHTUB model was very similar to the estimated internal loading from the Nürnberg equation and senescence of curly-leaf pondweed.

4.1.4 Cowley Lake Internal Loading

Internal loading was estimated for Cowley Lake as a minimum and maximum range based on documented sediment phosphorus release rates from Bischoff and James 2012. Cowley Lake is an algal-dominated shallow lake based on field observations during a point-intercept survey conducted by Three Rivers Park District in 2012 (Appendix E). Consequently, the Nürnberg equation was used to estimate internal loading from sediment release rates that were acquired from similar algal-dominated eutrophic lakes (Bischoff and James 2012). The Nürnberg estimate of internal phosphorus loading ranged between 177.6 and 300.0 pounds per year (Table C-9). Aquatic vegetation surveys also indicated that curly-leaf pondweed senescence appears to be a significant influence on internal loading for Cowley Lake (Appendix E). The senescence of curly-leaf pondweed may potentially contribute an additional 54.3 to 105.0 pounds of phosphorus to the internal load (Table C-9). The Nürnberg and curly-leaf pondweed contributions to the total internal phosphorus load ranged between 231.9 and 405.0 pounds per year. The internal load required to calibrate to the in-lake total phosphorus concentration for the BATHTUB model was approximately 418.7 pounds (Appendix C3). This internal load was similar to the estimated internal loading from the Nürnberg equation and senescence of curly-leaf pondweed.

Table C-9: Cowley Lake annual internal loading estimates.

Internal Loading Source	Total Phosphorus Load (lbs/year)	
	Minimum	Maximum
Sediment Release	177.6	300.0
Curly-leaf Pondweed	54.3	105.0
Total	231.9	405.0

4.1.5 Henry Lake Internal Loading

Internal loading was estimated for Henry Lake as a minimum and maximum range based on documented sediment phosphorus release rates from Bischoff and James 2012. Henry Lake is a plant-dominated shallow lake based on a point-intercept survey conducted by Three Rivers Park District in 2012 (Appendix E). Consequently, the Nürnberg equation was used to estimate internal loading from sediment release rates that were acquired from similar plant-dominated eutrophic lakes (Bischoff and James 2012). The Nürnberg estimate of internal phosphorus loading ranged between 13.3 and 74.7 pounds per year (Table C-10). Aquatic vegetation surveys also indicated that curly-leaf pondweed senescence appears to be a significant influence on internal loading for Henry Lake (Appendix E). The senescence of curly-leaf pondweed may potentially contribute an additional 38.8 to 149.9 pounds of phosphorus to the internal load (Table C-10). The Nürnberg and curly-leaf pondweed contributions to the total internal phosphorus load ranged between 52.1 and 224.6 pounds per year (Table C-9). The internal load required to calibrate to the in-lake total phosphorus concentration for the BATHTUB model was approximately 268.7 pounds (Appendix C3). This internal load was similar to the estimated internal loading from the Nürnberg equation and senescence of curly-leaf pondweed.

Table C-10: Henry Lake annual internal loading estimates.

Internal Loading Source	Total Phosphorus Load (lbs/year)	
	Minimum	Maximum
Sediment Release	13.3	74.7
Curly-leaf Pondweed	38.8	149.9
Total	52.1	224.6

4.1.6 Sylvan Lake Internal Loading

Internal loading was estimated for Sylvan Lake as a minimum and maximum range based on documented sediment phosphorus release rates from Bischoff and James 2012. Sylvan Lake is an algal dominated shallow lake based on a point-intercept survey conducted by Three Rivers Park District in 2012 (Appendix E). Consequently, the Nürnberg equation was used to estimate internal loading from sediment release rates that were acquired from similar algal-dominated eutrophic lakes (Bischoff and James 2012). The Nürnberg estimate of internal phosphorus loading ranged between 318.4 and 529.6 pounds per year (Table C-11). Aquatic vegetation surveys also indicated that curly-leaf pondweed senescence appears to be a significant influence on internal loading for Sylvan Lake (Appendix E). The senescence of curly-leaf pondweed may potentially contribute an additional 157.2 to 303.9 pounds of phosphorus to the internal load (Table C-11). The Nürnberg and curly-leaf pondweed contributions to the total internal phosphorus load ranged between 475.6 and 833.6 pounds per year. The internal load required to calibrate to the in-lake total phosphorus concentration for the BATHTUB model was approximately 877.2 pounds (Appendix C3). This internal load was similar to the estimated internal loading from the Nürnberg equation and senescence of curly-leaf pondweed.

Table C-11: Sylvan Lake annual internal loading estimates.

Internal Loading Source	Total Phosphorus Load (lbs/year)	
	Minimum	Maximum
Sediment Release	318.4	529.6
Curly-leaf Pondweed	157.2	303.9
Total	475.6	833.5

4.1.7 Goose Lake Internal Loading

Internal loading was estimated for Goose Lake as a minimum and maximum range based on documented sediment phosphorus release rates from Bischoff and James 2012. Goose Lake is an algal dominated shallow lake based on a point-intercept survey conducted by Three Rivers Park District in 2012 (Appendix E). Consequently, the Nürnberg equation was used to estimate internal loading from sediment release rates that were acquired from similar algal-dominated eutrophic lakes (Bischoff and James 2012). The Nürnberg estimate of internal phosphorus loading ranged between 131.6 and 270.2 pounds per year (Table C-12). Aquatic vegetation surveys indicated that there doesn't appear to be a significant influence of curly-leaf pondweed senescence on internal load. Therefore, curly-leaf pondweed was not considered a significant component to the total internal load. The internal load required to calibrate to the in-lake total phosphorus concentration for the BATHTUB model was approximately 71.2 pounds (Appendix C3). This internal load was below the estimated internal loading from the Nürnberg equation. Bischoff and James (2012) have documented that there are some algal-dominated lakes that have unusually low sediment phosphorus release rates. The mechanisms responsible for these unusual sediment release rates are currently unknown. Goose Lake may have unusually low sediment phosphorus release rates, which may account for the difference between the Nürnberg estimates and internal load used to calibrate the Bathtub model.

Table C-12: Goose Lake annual internal loading estimates.

Internal Loading Source	Total Phosphorus Load (lbs/year)	
	Minimum	Maximum
Sediment Release	131.6	270.2
Curly-leaf Pondweed	0	0
Total	131.6	270.2

5.0 Atmospheric Loading

The atmospheric depositional loading was estimated within the Bathtub model. The default Bathtub value for atmospheric deposition was 0.27 lbs/acre-year (30 mg/m^2-yr). The Bathtub default value was similar to other atmospheric total phosphorus loading rates reported in a technical memorandum to the Minnesota Pollution Control Agency (2007). The total surface area of the lake is multiplied by the atmospheric depositional load to determine the load delivered to the lake. The atmospheric depositional loading was included in the overall lake nutrient balance and is identified in the Bathtub model as precipitation loading. The atmospheric loading was documented in the Appendix C3.

6.0 Bathtub Model Calibration

The Bathtub model is calibrated to the observed in-lake water quality conditions. Bathtub is an empirical model that estimates lake and reservoir eutrophication using several different algorithms. The algorithms selected for the different in-lake parameters were based on the model that best predicted the observed in-lake conditions. Although the algorithms used for estimating in-lake water quality conditions varied for each lake, the calibration approach and methodology was consistent among all of the lakes. All of the Bathtub model simulations were performed for years that were representative of average annual precipitation conditions. The predicted and observed in-lake water quality conditions were documented within the Appendix C5.

The Bathtub model was initially calibrated to the in-lake total phosphorus concentration. There are essentially eight different total phosphorus algorithms available for selection within the model. The algorithm selected was based on the model that provided the best estimate of in-lake total phosphorus concentration that was similar to observed conditions. All of the models calculate in-lake phosphorus concentration based on the lake morphological characteristics and the different sources of phosphorus loading (watershed, internal, and atmospheric). An average rate of internal loading is implicit for each model since each algorithm is based on empirical data from lakes that have natural internal loading. However, the impaired lakes within the Elm Creek Watershed have excessive nutrients with rates of internal loading that are higher than the implicit background levels. Consequently, an additional internal loading component was necessary to calibrate to the in-lake phosphorus concentration. The internal loading rate was adjusted (in the segment portion of the Bathtub model) to the observed in-lake total phosphorus concentration. The additional internal load required to calibrate to the in-lake phosphorus concentration was compared to the estimated internal load from the Nürnberg equation and curly-leaf pondweed senescence. The internal load required to calibrate the Bathtub model for each lake seemed reasonable when comparing to the manual estimates of internal load (Appendix C3). The estimated internal load to calibrate the Bathtub model was used in the overall lake nutrient balance (Appendix C4).

The Bathtub model was calibrated to chlorophyll-*a* and secchi depth transparency after the overall nutrient balance was established through the calibration process of total phosphorus (Appendix C4). The chlorophyll-*a* and secchi depth transparency are considered water clarity response variables that are influenced by the overall phosphorus balance in each lake. The procedure for calibration of the water clarity response variables simply provided a more robust model that simulated the existing impaired water quality conditions, but was not used to simulate the water clarity changes in response to achieving the assimilative phosphorus capacity of each lake to meet the MPCA standards. There are six different chlorophyll-*a* algorithms available for selection within the model, and there are four different secchi depth transparency algorithms available for selection within the model. The Bathtub model was initially calibrated to chlorophyll-*a* because of the influence it has on water clarity. The chlorophyll-*a* and secchi depth algorithms were selected based on the model that best predicted the observed in-lake condition (Appendix C5). The chlorophyll-*a* and secchi depth model coefficients were adjusted incrementally to further calibrate to the observed in-lake water quality conditions.

7.0 Loading Capacity Determination

The Bathtub model load-response function was used to evaluate the in-lake water quality response to varying phosphorus loads from the watershed. The load-response analysis was conducted to determine the watershed load reductions necessary to meet the in-lake MPCA standard. The impaired lakes within the Elm Creek Watershed are located within the North Central Hardwoods Forest Ecoregion. The MPCA water quality standard for the eco-region is dependent upon whether the lake is classified as a shallow or deep lake. The load-response function was performed on each lake to meet the in-lake total phosphorus standard (Appendix C6). It was assumed that the water clarity response variable (chlorophyll-*a* and secchi depth transparency) standards would be achieved if the in-lake total phosphorus standard was met. The load-response function incrementally adjusts the inflow phosphorus concentrations for all of the tributaries and estimates the change in the in-lake water quality conditions.

The impaired lakes within the Elm Creek Watershed are extremely eutrophic due to the past excessive amounts of nutrient loading. The internal load seems to have a significant influence on water quality conditions and has accounted for a significant portion of the nutrient balance for all of the impaired lakes (Appendix C4). The majority of the load response simulations indicated that the long-term in-lake phosphorus standard was not attainable with the internal loading components in the model. The long-term in-lake water quality standards most likely would be attainable if the excess internal loading were controlled or managed. It was assumed that the internal loading would have to be controlled in order for the lakes to meet water quality standards. To determine the loading capacity necessary to achieve the long-term water quality standards, the internal loading was subsequently removed from the Bathtub model for majority of the lakes. There was only one lake (Fish Lake) that was able to achieve the phosphorus standard while performing the load response function with internal loading remaining in the model. This particular lake was currently close to already meeting the phosphorus standard.

The loading capacity is defined as the maximum load that a specific lake can receive and still meet water quality standards. The Bathtub model provides a load response curve that reflected the relationship between watershed loading and in-lake water quality. The model does not take into account the atmospheric load and any internal load remaining in the model (i.e. Fish Lake) at the time the load response curve was developed. Consequently, the atmospheric load and any internal load that remained in the model were added to the watershed load to determine the total loading capacity for each lake. The load response simulations to determine individual lake loading capacity was further identified within the Appendix C6. The total loading capacity for each lake was then used for the development of the TMDL equation.

8.0 Literature Cited

Barr Engineering Company. 2007. Detail Assessment of Phosphorus Sources to Minnesota Watersheds– Atmospheric Deposition: 2007 Update. Technical Memorandum prepared for Minnesota Pollution Control Agency.

Bischoff, J., and James, W.F. 2012. Anoxic and Oxic Release of Phosphorus from Sediments in Minnesota Lakes. Paper presented at the Minnesota Water Resources Conference, Saint Paul RiverCentre, St. Paul, Minnesota 2012.

James, W.F. 2013. Alum Dosage Considerations for Fish Lake, Hennepin County, Minnesota. Report submitted by University of Wisconsin – Stout Laboratory. Sustainability Science Institute. Prepared for Three Rivers Park District. February 2013.

James, W.F. 2013. Internal Phosphorus Loading and Sediment Phosphorus Fractionation Analysis for Rice Lake, Minnesota. Report submitted by University of Wisconsin-Stout Laboratory. Sustainability Science Institute. Prepared for Three Rivers Park District. February 2013.

James, W.F. 2013. Internal Phosphorus Loading and Sediment Phosphorus Fractionation Analysis for Diamond Lake, Minnesota. Report submitted by University of Wisconsin-Stout Laboratory. Sustainability Science Institute. Prepared for Three Rivers Park District. February 2013.

Nürnberg, G.K. 1987. A comparison of internal phosphorus loads in lakes with anoixic hypolimnia: laboratory incubations versus hypolimnetic phosphorus accumulation. Limnological Oceanography. 32: 1160-1164.

Nürnberg, G.K. 1988. Prediction of phosphorus release rates from total and reductant-soluble phosphorus in anoxic lake sediments. Canadian Journal of Fisheries Aquatic Sciences 45: 453-462.

Nürnberg, G.K. 1994. Phosphorus release from anoxic sediments: What we know and how we can deal with it. Lemnetica. 10(1): 1-4.

Vlach, B.R., and Barten, J.M. 2007. Medicine Lake Endothall Treatment to Control Curlyleaf Pondweed 2004 – 2007. Status Report prepared by Three Rivers Park District. March 2008.

Walker, William W., “Empirical Methods for Predicting Eutrophication in Impoundments – Report 3: Model Refinements”, prepared for Office, Chief of Engineers, U.S. Army, Washington, D.C., Technical Report E-81-9, U.S. Army Corps of Engineers, Waterways Experiment Station, Vicksburg, Mississippi, draft 1983, published March 1985.

Walker, William, W., Simplified Procedures for Eutrophication Assessment & Prediction: User Manual Instruction Report W-96-2 USAE Waterways Experiment Station, Vicksburg, Mississippi, 1996 (Updated September 1999)

Appendix C1
Lake Bathymetry and Bathtub Model Morphometry Inputs

Fish Lake

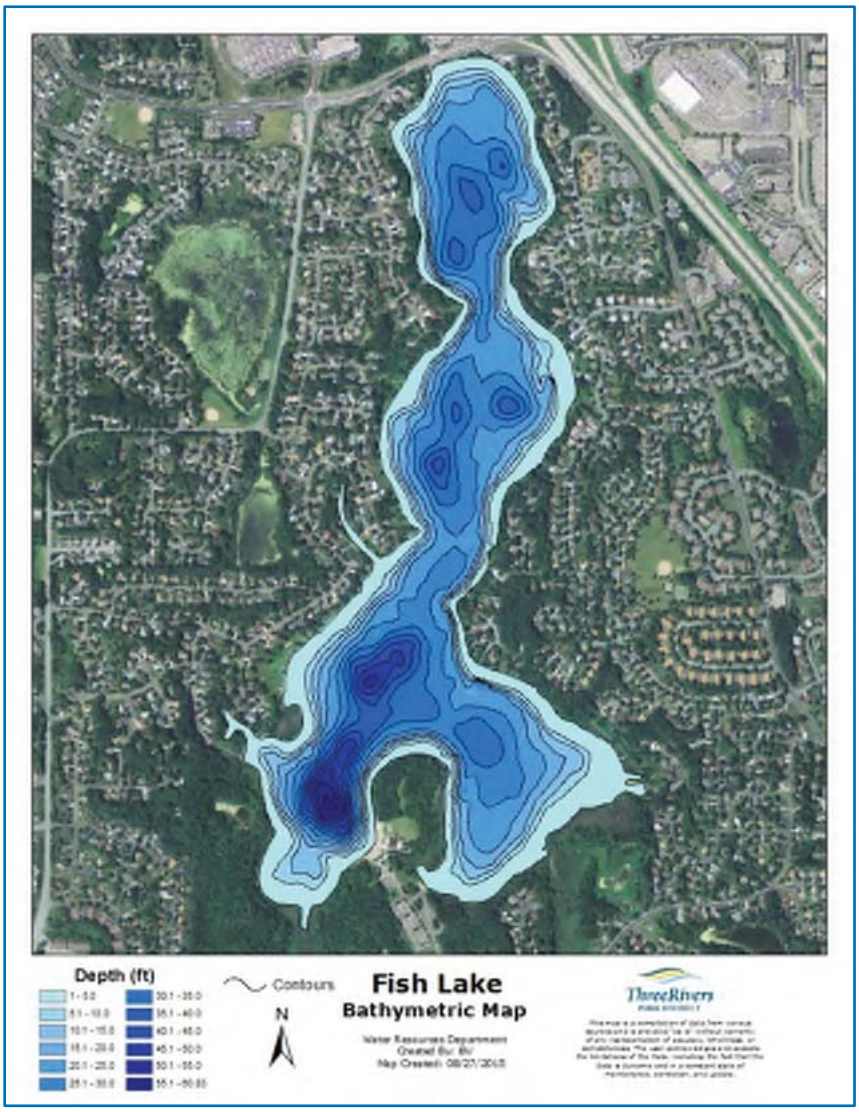

Fish Lake Characteristics	
DNR ID	27-118-00
Lake Area	0.96 km^2 (238 acres)
% Littoral (≤ 15 ft in depth)	39%
Mean Depth	5.72 m
Maximum Depth	18.5 m
Mixed Layer Depth	4.80 m
Hypolimnetic Depth	2.62 m
Length	2.35 km
Classification	Deep Lake

Rice Lake – Main Basin

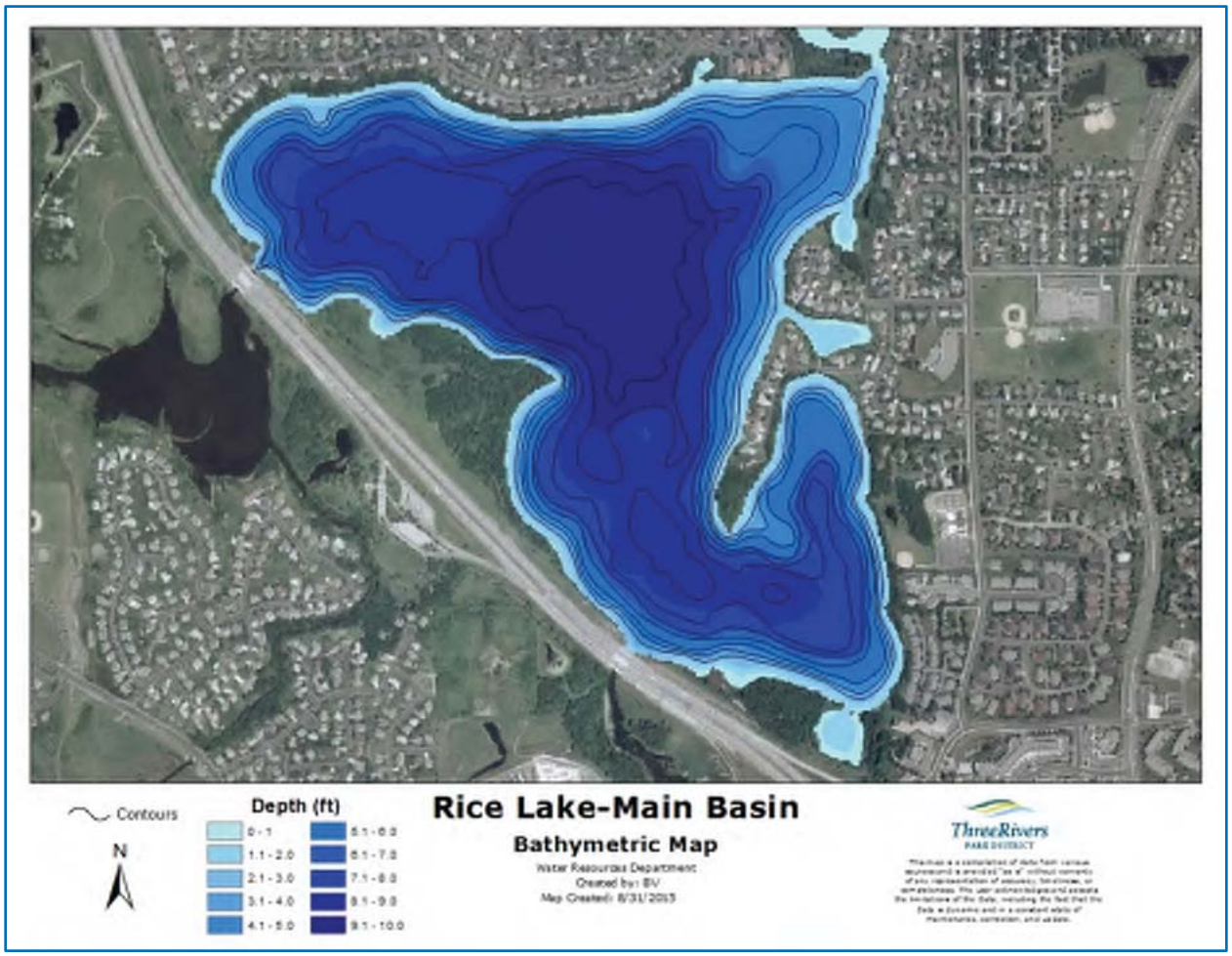

Rice Lake (Main Basin) Characteristics	
DNR ID	27-116-01
Lake Area	1.34 km^2 (330 acres)
% Littoral (≤ 15 ft in depth)	100%
Mean Depth	2.14 m
Maximum Depth	3.4 m
Mixed Layer Depth	2.14 m
Length	1.6 km
Classification	Shallow Lake
Condition/State	Algal Dominated

Diamond Lake

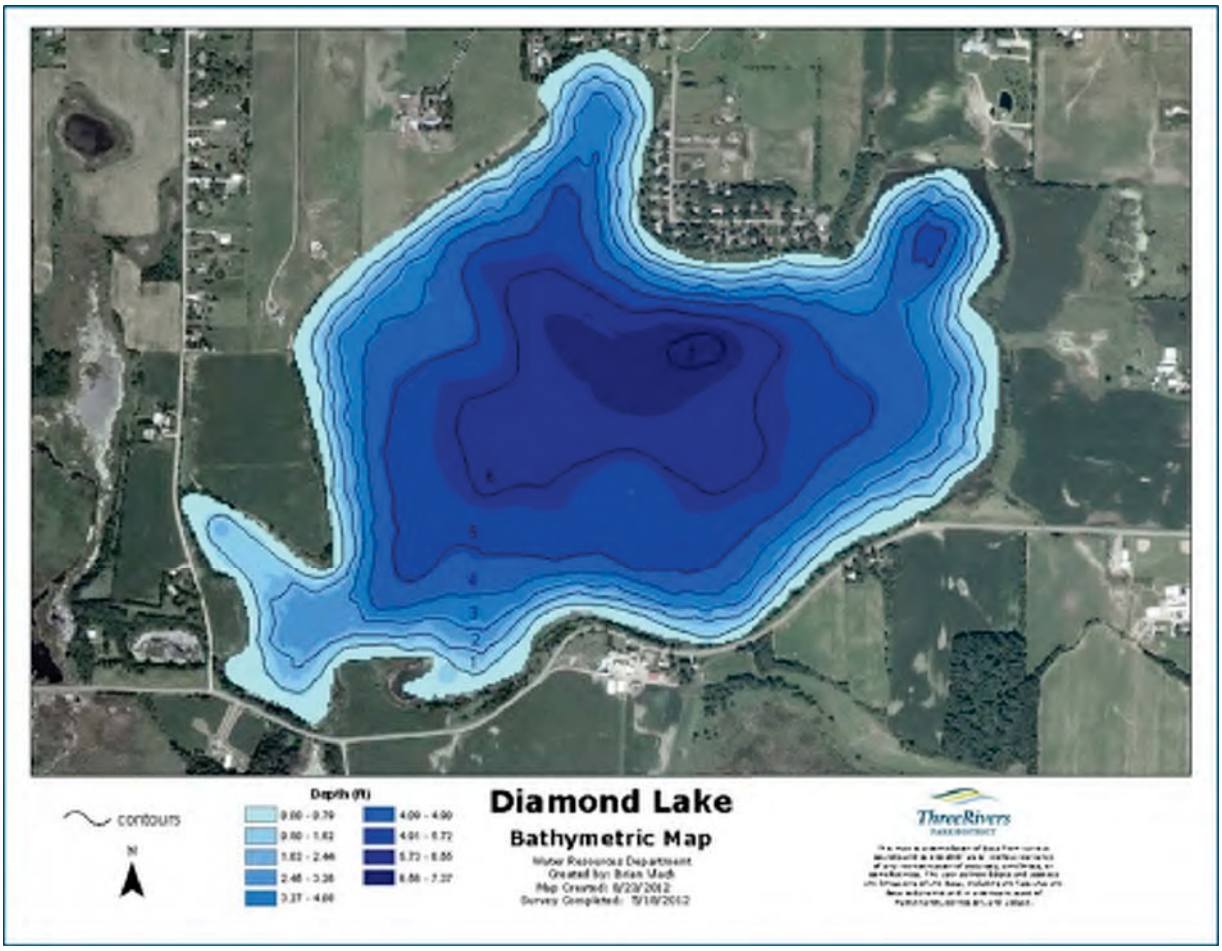

Diamond Lake	
DNR ID	27-0125-00
Lake Area	1.57 km^2 (388.7 Acres)
% Littoral (≤ 15 ft in depth)	100%
Mean Depth	1.21 m
Maximum Depth	2.25 m
Mixed Layer Depth	1.21 m
Length	1.63 km
Classification	Shallow Lake
Condition/State	Algal/Plant Dominated

Cowley Lake

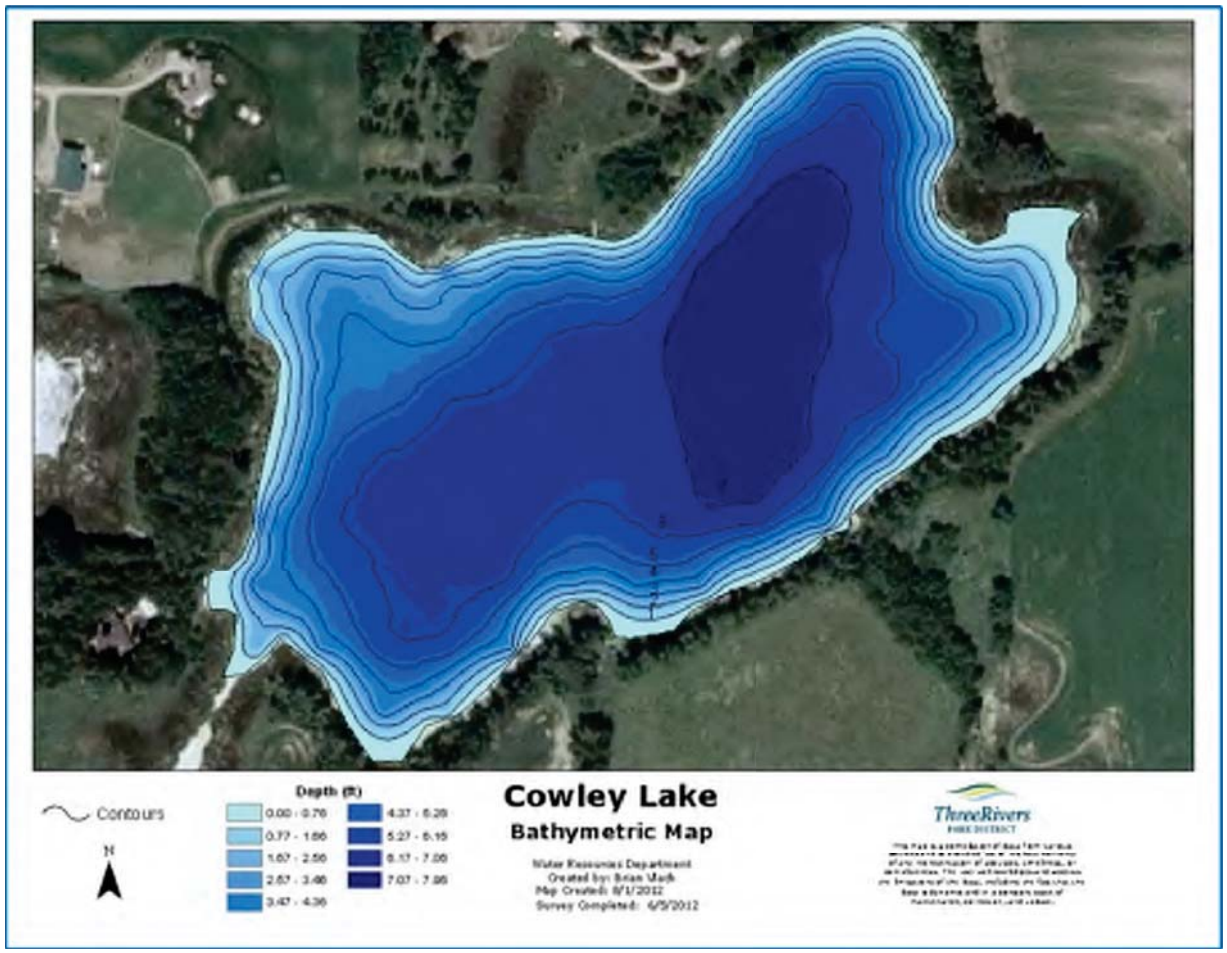

Cowley Lake	
DNR ID	27-0169-00
Lake Area	0.133 km^2 (32.9 Acres)
% Littoral (≤ 15 ft in depth)	100%
Mean Depth	1.46 m
Maximum Depth	2.43 m
Mixed Layer Depth	1.46 m
Length	0.51 m
Classification	Shallow Lake
Condition/State	Algal Dominated

Henry Lake

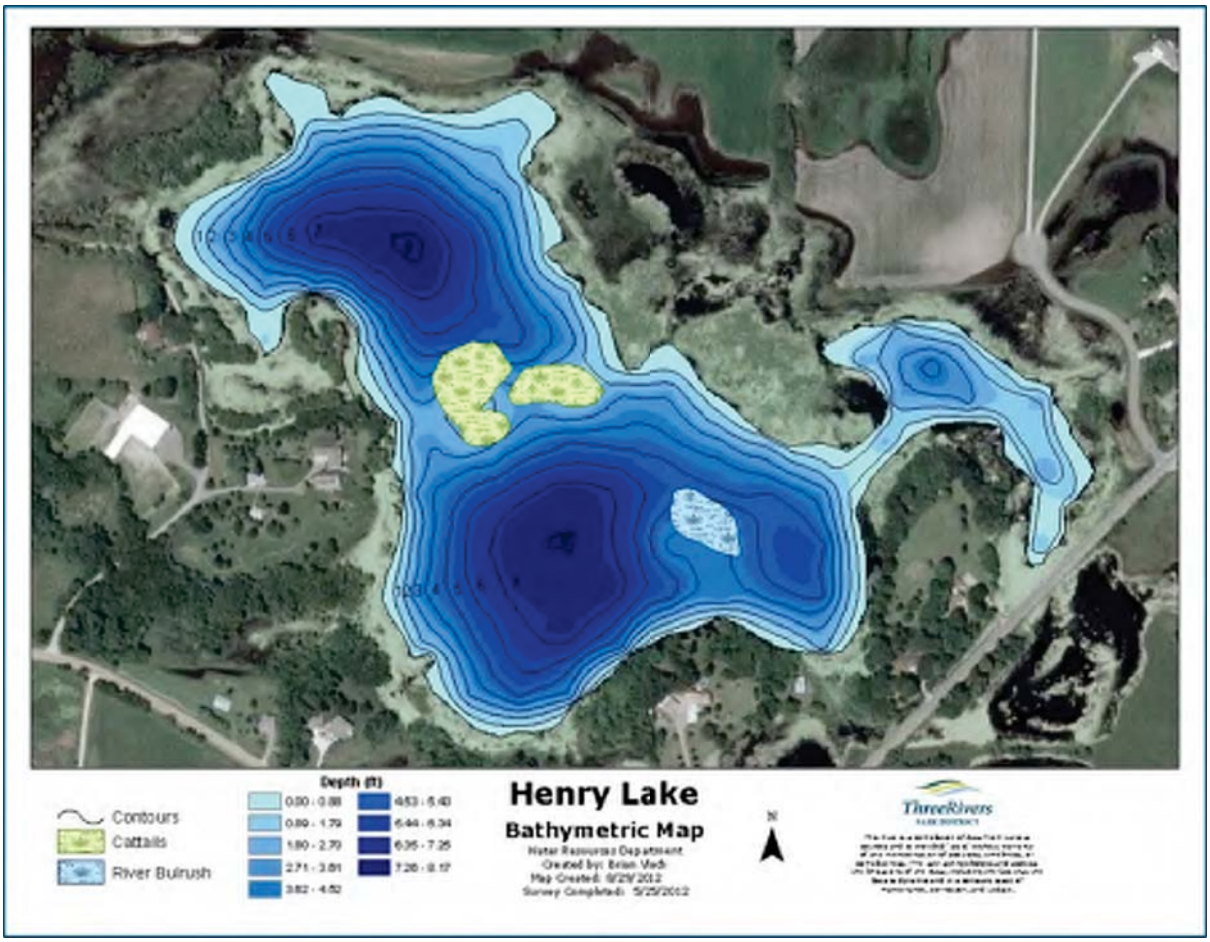

Henry Lake	
DNR ID	27-0175-00
Lake Area	0.190 km^2 (47.0 Acres)
% Littoral (≤ 15 ft in depth)	100%
Mean Depth	0.86 m
Maximum Depth	2.49 m
Mixed Layer Depth	0.86 m
Length	0.36 km
Classification	Shallow Lake
Condition/State	Plant Dominated

Sylvan Lake

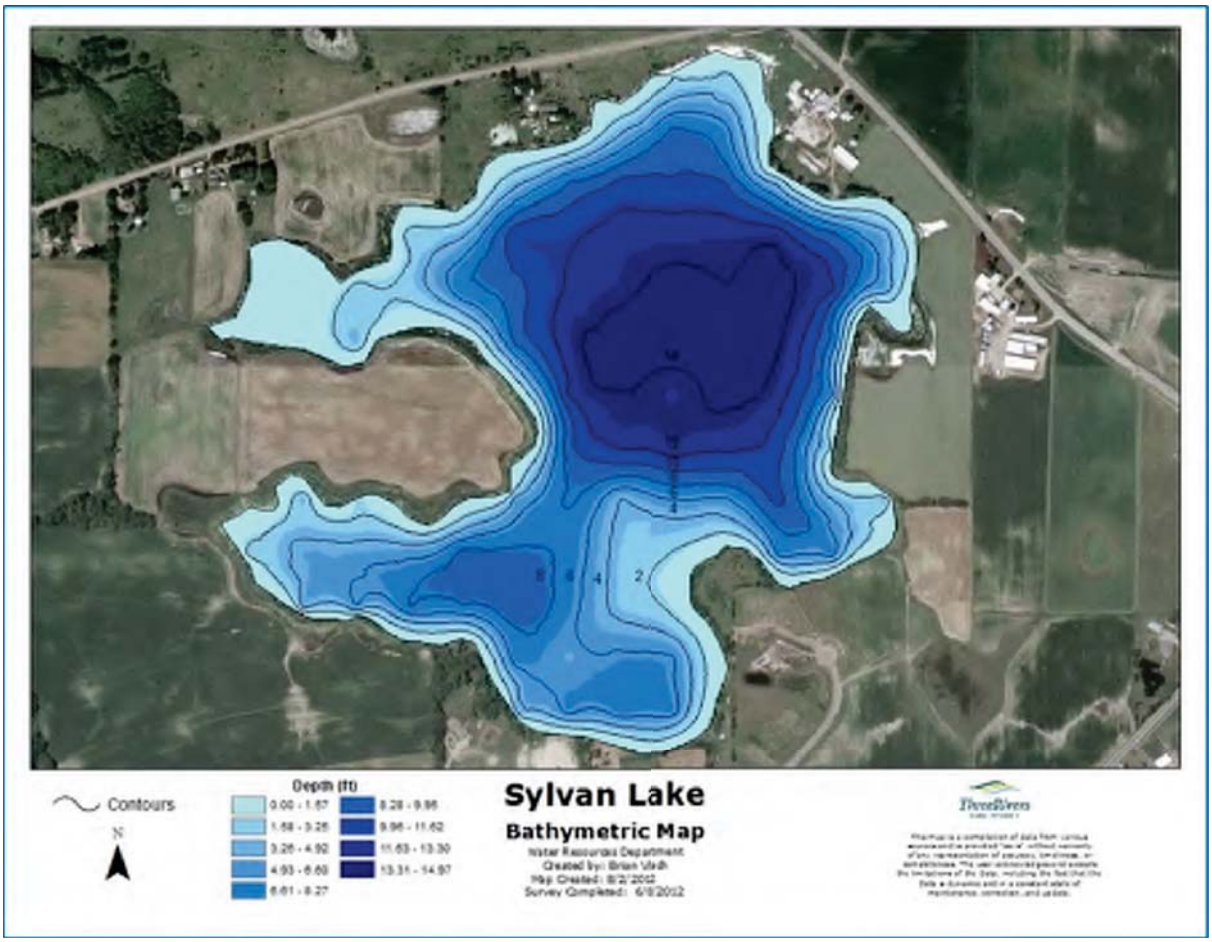

Sylvan Lake	
DNR ID	27-0171-00
Lake Area	0.60 km^2 (148.1 Acres)
% Littoral (≤ 15 ft in depth)	100%
Mean Depth	2.15 m
Maximum Depth	4.56 m
Mixed Layer Depth	2.15 m
Length	1.07 km
Classification	Shallow Lake
Condition/State	Algal Dominated

Goose Lake

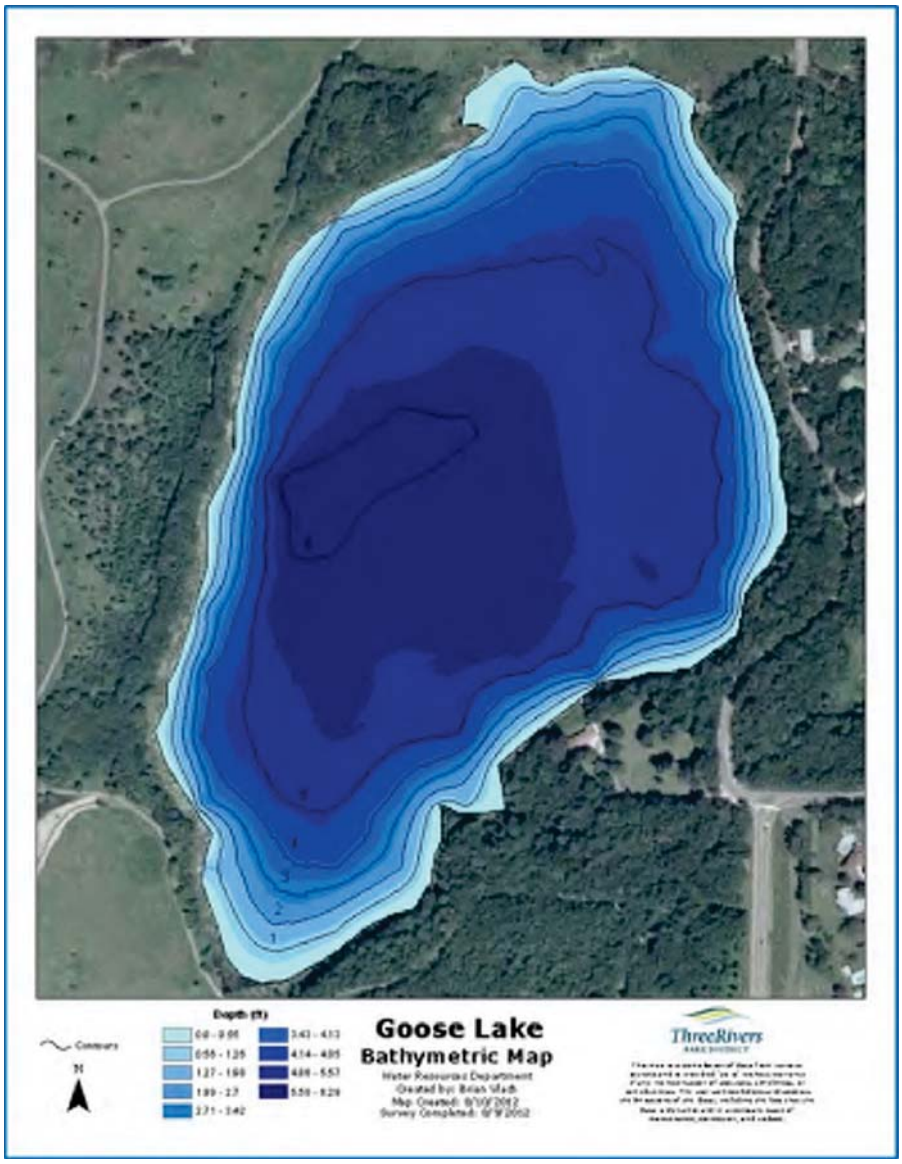

Goose Lake	
DNR ID	27-0122-00
Lake Area	0.26 km^2 (64.3 Acres)
% Littoral (≤ 15 ft in depth)	100%
Mean Depth	1.29 m
Maximum Depth	1.92 m
Mixed Layer Depth	1.29 m
Classification	Shallow Lake
Condition/State	Algal Dominated

Appendix C2
Bathtub Model Tributary Loading Inputs

Fish Lake Watershed Inputs			
Tributary	Area km^2	Flow Volume hm^3/yr	Total Phosphorus µg/L
FL1	0.287	0.057	226.5
FL2	1.005	0.194	240.8
FL4	0.697	0.151	197.1
FL5	0.091	0.020	262.4
FL6	0.362	0.091	166.1
FL7	1.872	0.361	210.3
Edward Lake (FL-A13)	0.074	0.018	273.6
Edward Lake	0.398	0.050	114.9
Direct (FL-A34)	1.566	0.298	266.5
Direct (FL-A15)	0.187	0.034	182.8

Rice Lake-Main Watershed Inputs			
Tributary	Area km^2	Flow Volume hm^3/yr	Total Phosphorus µg/L
Fish Lake	8.02	1.22	42.5
EC-77	47.47	11.68	275.0
EC-P53	5.68	0.87	275.0
EC-P78	4.47	1.16	198.0
Rice West Direct (EC-A79)	1.57	0.28	365.0
EC-P85	0.16	0.064	199.4
Rice Main Direct (EC-A89)	3.29	0.95	377.7

Diamond Lake Wateshed Inputs			
Tributary	Area km^2	Flow Volume hm^3/yr	Total Phosphorus µg/L
Diamond-Direct	2.03	0.212	437.3
Grass Lake	8.41	2.696	301.7

Cowley Lake Watershed Inputs			
	Area	Flow Volume	Total Phosphorus
Tributary	km^2	hm^3/yr	µg/L
Cowley-Direct	3.35	0.585	324.7

Henry Lake Wateshed Inputs			
	Area	Flow Volume	Total Phosphorus
Tributary	km^2	hm^3/yr	µg/L
Henry-Direct	3.28	0.486	645.0

Sylvan Lake Wateshed Inputs			
	Area	Flow Volume	Total Phosphorus
Tributary	km^2	hm^3/yr	µg/L
Sylvan-Direct	1.3	0.249	1198.0

Goose Lake Watershed Inputs			
	Area	Flow Volume	Total Phosphorus
Tributary	km^2	hm^3/yr	µg/L
8T-1.1	0.012	0.0036	300
8T-4.2	0.013	0.0016	273.5
8T-3P	0.093	0.0061	86.6
8T-1P	0.301	0.077	104.2
8T-4P	0.055	0.0098	100.8
Goose Direct	0.497	0.037	250.5

Appendix C3
Internal and Atmospheric Loading for Bathtub Models

The annual internal load input into the Bathtub model compared to the minimum and maximum estimated annual internal load from the Nürnberg equation and curly-leaf pondweed senescence.

Lake	Internal Load (lbs/year)		
	Estimated		Bathtub
	Minimum	Maximum	Model
Fish	1165.8	1646.9	1577.0
Rice-Main	2628.1	3136.3	3270.3
Diamond	739.7	1338.3	796.5
Cowley	231.9	405.0	418.7
Henry	52.1	224.6	268.7
Sylvan	475.6	833.6	504.4
Goose	131.6	270.2	71.2

The annual atmospheric load input into the Bathtub model.

Lake	Atmospheric Load (lbs/year)
Fish	63.5
Rice-Main	88.4
Diamond	103.8
Cowley	8.8
Henry	12.6
Sylvan	39.7
Goose	17.2

Appendix C4
Bathtub Model Nutrient Mass Balance

Fish Lake			
	Annual TP Load		
Load	kg/yr	lbs/yr	%
Watershed	282.0	621.7	27.5%
Internal	715.3	1577.0	69.7%
Atmospheric	28.8	63.5	2.8%
Total	1026.1	2262.2	100.0

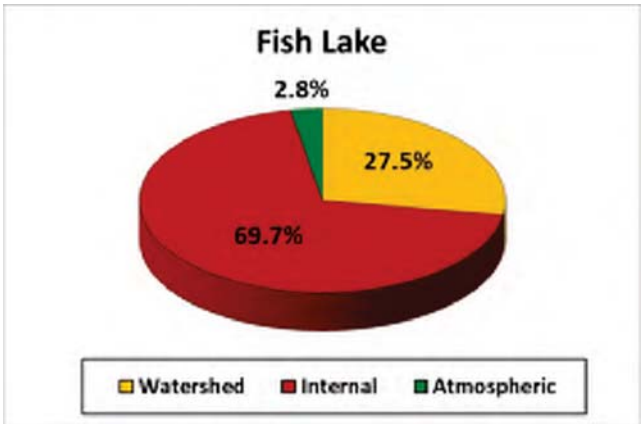

Rice Lake			
	Annual TP Load		
Load	kg/yr	lbs/yr	%
Watershed	4206.6	9274.0	73.4%
Internal	1483.4	3270.3	25.9%
Atmospheric	40.1	88.4	0.7%
Total	5730.1	12632.7	100.0

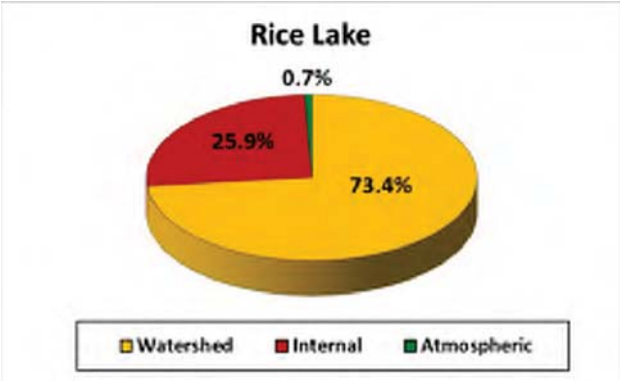

Diamond Lake			
	Annual TP Load		
Load	kg/yr	lbs/yr	%
Watershed	906.1	1997.6	68.9%
Internal	361.3	796.5	27.5%
Atmospheric	47.1	103.8	3.6%
Total	1314.5	2898.0	100.0

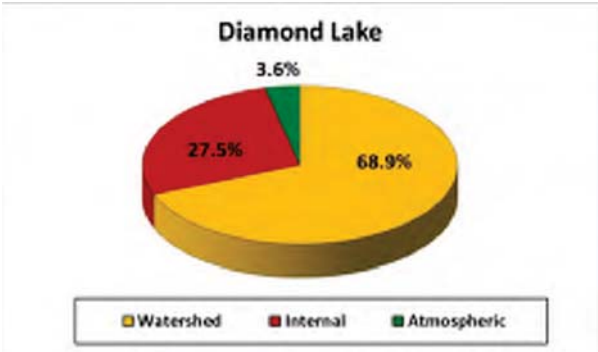

Cowley Lake			
	Annual TP Load		
Load	kg/yr	lbs/yr	%
Watershed	189.9	418.7	49.5%
Internal	189.9	418.7	49.5%
Atmospheric	4.0	8.8	1.0%
Total	383.8	846.1	100.0

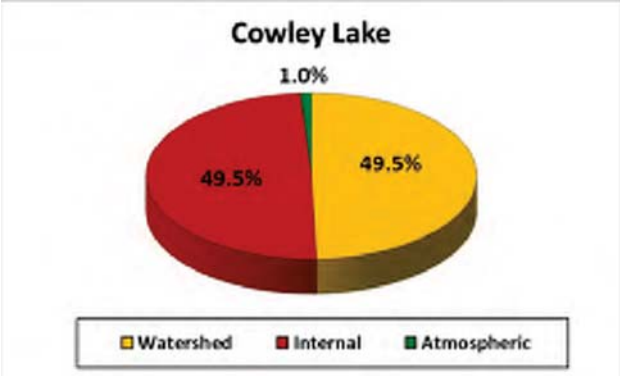

Henry Lake			
	Annual TP Load		
Load	kg/yr	lbs/yr	%
Watershed	313.5	691.1	71.1%
Internal	121.9	268.7	27.6%
Atmospheric	5.7	12.6	1.3%
Total	441.1	972.5	100.0

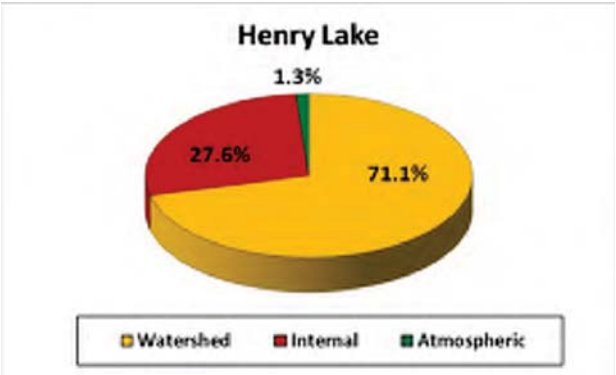

Sylvan Lake			
	Annual TP Load		
Load	kg/yr	lbs/yr	%
Watershed	298.8	658.7	54.8%
Internal	228.8	504.4	41.9%
Atmospheric	18.0	39.7	3.3%
Total	545.6	1202.8	100.0

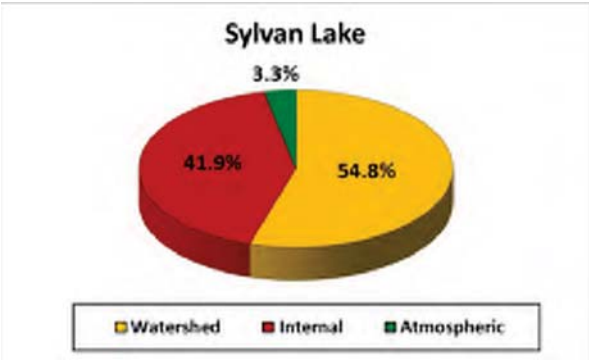

Goose Lake			
	Annual TP Load		
Load	kg/yr	lbs/yr	%
Watershed	20.3	44.8	33.6%
Internal	32.3	71.2	53.5%
Atmospheric	7.8	17.2	12.9%
Total	60.4	133.2	100.0

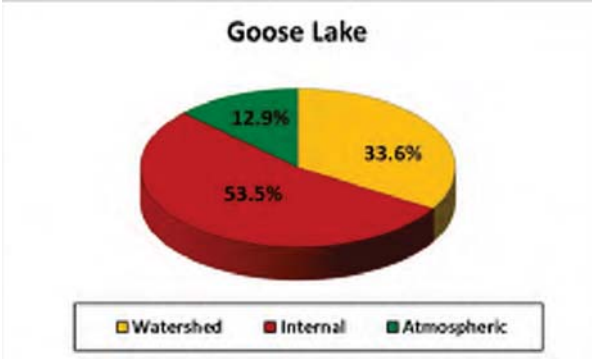

Appendix C5
Bathtub Model Calibration (Predicted versus Observed)

Fish Lake Bathtub Calibration Model Estimates			
Variable	**Predicted**	**Observed**	**Model**
Total Phosphorus (µg/L)	42.0	42.0	2nd Order, Fixed
Chlorophyll-a (µg/L)	21.0	21.0	P, Carlson TSI
Secchi (m)	1.4	1.4	Chlorophyll-a & Turbidity

Rice Lake Bathtub Calibration Model Estimates			
Variable	**Predicted**	**Observed**	**Model**
Total Phosphorus (µg/L)	326.0	326.0	Settling Velocity
Chlorophyll-a (µg/L)	100.4	100.4	P, Linear
Secchi (m)	0.8	0.8	Chlorophyll-a & Turbidity

Diamond Lake Bathtub Calibration Model Estimates			
Variable	**Predicted**	**Observed**	**Model**
Total Phosphorus (µg/L)	145.4	145.3	Canfield & Bachman, Lakes
Chlorophyll-a (µg/L)	42.9	43.0	P, Linear
Secchi (m)	1.3	1.3	Chlorophyll-a & Turbidity

Cowley Lake Bathtub Calibration Model Estimates			
Variable	**Predicted**	**Observed**	**Model**
Total Phosphorus (µg/L)	533.5	533.6	Settling Velocity
Chlorophyll-a (µg/L)	135.9	135.6	P, Linear
Secchi (m)	0.8	0.8	Chlorophyll-a vs Turbidity

Henry Lake Bathtub Calibration Model Estimates			
Variable	**Predicted**	**Observed**	**Model**
Total Phosphorus (µg/L)	149.8	149.9	2nd Order, Fixed
Chlorophyll-a (µg/L)	38.2	38.4	P, Linear
Secchi (m)	0.7	0.7	Chlorophyll-a & Turbidity

Sylvan Lake Bathtub Calibration Model Estimates			
Variable	**Predicted**	**Observed**	**Model**
Total Phosphorus (µg/L)	353.4	353.4	First Order
Chlorophyll-a (µg/L)	69.6	69.8	P, N, Light, T
Secchi (m)	0.3	0.3	Chlorophyll-a & Turbidity

Goose Lake Bathtub Calibration Model Estimates			
Variable	**Predicted**	**Observed**	**Model**
Total Phosphorus (µg/L)	179.7	180.6	2nd Order, Decay
Chlorophyll-a (µg/L)	114.6	114.5	P,N, Low-Turbidity
Secchi (m)	0.3	0.3	Chlorophyll-a & Turbidity

Appendix C6
Bathtub Model Load Response Curves

Fish Lake
File: \\admn-file-vm03\users$\101782\Documents\BATHTUB\Elm Creek\Fish Lake\Fish Lake 2010-2012 (6-3-2015).btb
Load / Response
Tributary: All
Segment: Area-Wtd Mean
Variable: TOTAL P MG/M3

Scale Factor	Flow hm3/yr	Load kg/yr	Conc TOTAL P MG/M3 mg/m^3	Mean	CV	Low	High	Watershed Load lbs/yr	Total Load lbs/yr
Base:	1.3	282.0	221.3	42.0	0.21	34.6	51.1	620.336621	2260.797
0.20	1.3	56.4	44.3	37.0	0.21	30.5	44.9	124.067331	1764.527
0.40	1.3	112.8	88.5	38.3	0.21	31.6	46.5	248.134662	1888.595
0.60	1.3	169.2	132.8	39.6	0.21	32.6	48.1	372.20206	2012.662
0.80	1.3	225.6	177.1	40.8	0.21	33.6	49.6	496.269324	2136.729
1.00	1.3	282.0	221.3	42.0	0.21	34.6	51.1	620.336621	2260.797
1.20	1.3	338.4	265.6	43.2	0.21	35.6	52.5	744.40412	2384.864
1.40	1.3	394.8	309.9	44.3	0.21	36.5	53.9	868.471283	2508.931
1.60	1.3	451.2	354.1	45.5	0.22	37.4	55.2	992.538647	2632.999
1.80	1.3	507.5	398.4	46.5	0.22	38.3	56.6	1116.60601	2757.066
2.00	1.3	563.9	442.7	47.6	0.22	39.2	57.9	1240.67324	2881.133

Watershed Load lbs/yr	TP µg/L	Total Load lbs/yr
100.0	36.8	1740.46
125.0	37.0	1765.46
150.0	37.3	1790.46
175.0	37.5	1815.46
200.0	37.8	1840.46
225.0	38.1	1865.46
250.0	38.3	1890.46
275.0	38.6	1915.46
300.0	38.9	1940.46
325.0	39.1	1965.46
350.0	39.4	1990.46
375.0	39.6	2015.46
400.0	39.9	2040.46
415.0	40.0	2055.46
425.0	40.1	2065.46
450.0	40.4	2090.46
475.0	40.6	2115.46
495.0	40.8	2135.46
500.0	40.9	2140.46
525.0	41.1	2165.46
550.0	41.4	2190.46
575.0	41.6	2215.46
600.0	41.9	2240.46
620.3	42.0	2260.81
650.0	42.3	2290.46
675.0	42.6	2315.46
700.0	42.8	2340.46
725.0	43.0	2365.46
750.0	43.3	2390.46
775.0	43.5	2415.46
800.0	43.8	2440.46
825.0	44.0	2465.46
850.0	44.2	2490.46
875.0	44.4	2515.46
900.0	44.7	2540.46
925.0	44.9	2565.46
950.0	45.1	2590.46
975.0	45.3	2615.46
1000.0	45.6	2640.46
1025.0	45.8	2665.46
1050.0	46.0	2690.46
1075.0	46.2	2715.46
1100.0	46.5	2740.46

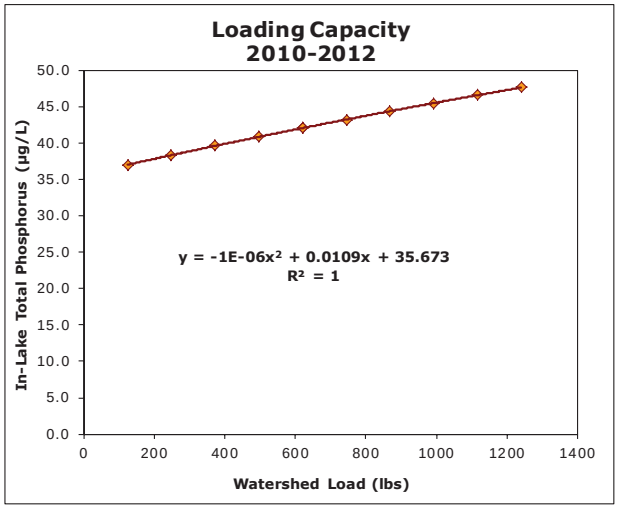

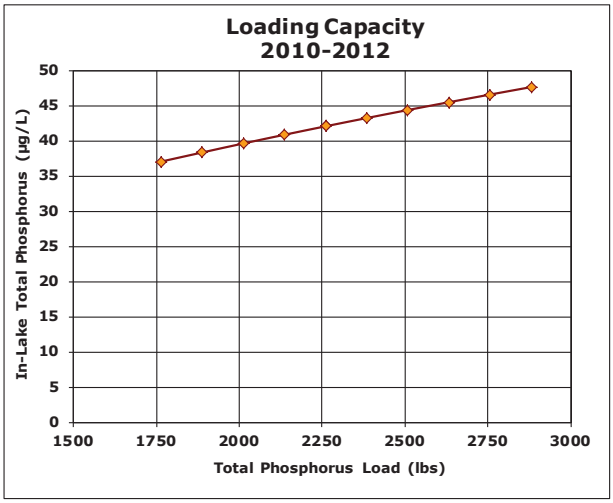

Rice Lake
File: \\admn-file-vm03\users$\101782\Documents\BATHTUB\Elm Creek\Rice Lake\Rice Lake 2010-2012 (8-17-2015).btb
Load / Response
Tributary: All
Segment: Area-Wtd Mean
Variable: TOTAL P MG/M3

Scale Factor	Flow hm3/yr	Load kg/yr	Conc TOTAL P MG/M3 mg/m^3	Mean	CV	Low	High	Watershed Load lbs/yr	Total Load lbs/yr
Base:	16.2	4206.6	259.3	241.6	0.16	208.8	279.7	9254.52	9342.92
0.20	16.2	841.3	51.9	50.2	0.15	43.5	57.9	1850.90	1939.30
0.40	16.2	1682.6	103.7	98.0	0.16	84.8	113.3	3701.81	3790.21
0.60	16.2	2524.0	155.6	145.9	0.16	126.1	168.7	5552.71	5641.11
0.80	16.2	3365.3	207.4	193.8	0.16	167.5	224.2	7403.62	7492.02
1.00	16.2	4206.6	259.3	241.6	0.16	208.8	279.7	9254.52	9342.92
1.20	16.2	5047.9	311.1	289.5	0.16	250.1	335.1	11105.42	11193.82
1.40	16.2	5889.2	363.0	337.4	0.16	291.4	390.6	12956.33	13044.73
1.60	16.2	6730.6	414.9	385.2	0.16	332.7	446.1	14807.23	14895.63
1.80	16.2	7571.9	466.7	433.1	0.16	374.0	501.5	16658.14	16746.54
2.00	16.2	8413.2	518.6	481.0	0.16	415.3	557.0	18509.04	18597.44

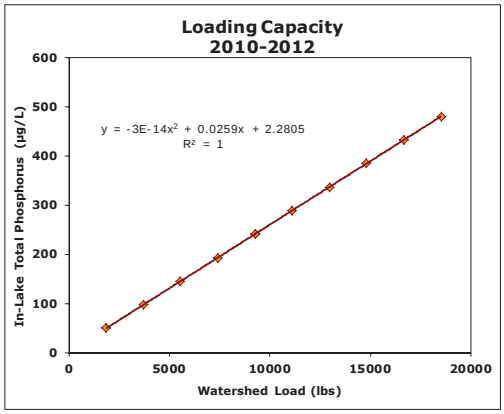

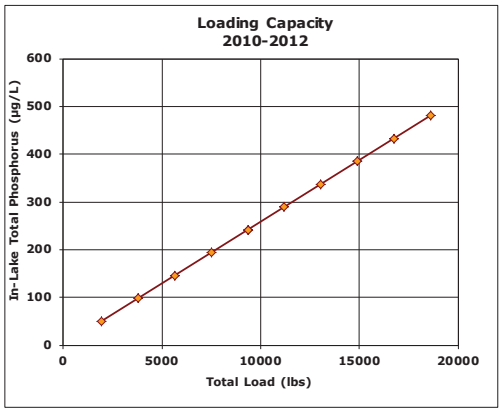

Watershed Load lbs/yr	TP µg/L	Total Load lbs/yr
2000	54.1	2088.4
2100	56.7	2188.4
2200	59.3	2288.4
2227	60.0	2315.4
2300	61.9	2388.4
2400	64.4	2488.4
2500	67.0	2588.4
2600	69.6	2688.4
2700	72.2	2788.4
2800	74.8	2888.4
2900	77.4	2988.4
3000	80.0	3088.4
3100	82.6	3188.4
3200	85.2	3288.4
3300	87.8	3388.4
3400	90.3	3488.4
3500	92.9	3588.4
3600	95.5	3688.4
3700	98.1	3788.4
3765	99.8	3853.4
3900	103.3	3988.4
4000	105.9	4088.4
4100	108.5	4188.4
4200	111.1	4288.4
4300	113.7	4388.4
4400	116.2	4488.4
4500	118.8	4588.4
4600	121.4	4688.4
4700	124.0	4788.4
4800	126.6	4888.4
4900	129.2	4988.4
5000	131.8	5088.4
5100	134.4	5188.4
5200	137.0	5288.4
5300	139.6	5388.4
5400	142.1	5488.4
5500	144.7	5588.4
5600	147.3	5688.4
5700	149.9	5788.4
5800	152.5	5888.4
5900	155.1	5988.4
6000	157.7	6088.4
6100	160.3	6188.4
6200	162.9	6288.4
6300	165.5	6388.4
6400	168.0	6488.4
6500	170.6	6588.4
6600	173.2	6688.4
6700	175.8	6788.4
6800	178.4	6888.4
6900	181.0	6988.4
7000	183.6	7088.4
7100	186.2	7188.4
7200	188.8	7288.4
7300	191.4	7388.4
7400	193.9	7488.4
7500	196.5	7588.4
7600	199.1	7688.4
7700	201.7	7788.4
7800	204.3	7888.4
7900	206.9	7988.4
8000	209.5	8088.4
8100	212.1	8188.4
8200	214.7	8288.4
8300	217.3	8388.4
8400	219.8	8488.4
8500	222.4	8588.4
8600	225.0	8688.4
8700	227.6	8788.4
8800	230.2	8888.4
8900	232.8	8988.4
9000	235.4	9088.4
9100	238.0	9188.4
9200	240.6	9288.4
9300	243.2	9388.4
9400	245.7	9488.4
9500	248.3	9588.4
9600	250.9	9688.4
9700	253.5	9788.4
9800	256.1	9888.4
9900	258.7	9988.4
10000	261.3	10088.4
10100	263.9	10188.4
10200	266.5	10288.4
10300	269.1	10388.4
10400	271.6	10488.4
10500	274.2	10588.4
10600	276.8	10688.4
10700	279.4	10788.4
10800	282.0	10888.4
10900	284.6	10988.4
11000	287.2	11088.4
11100	289.8	11188.4
11200	292.4	11288.4
11300	295.0	11388.4
11400	297.5	11488.4
11500	300.1	11588.4
11600	302.7	11688.4
11700	305.3	11788.4
11800	307.9	11888.4
11900	310.5	11988.4
12000	313.1	12088.4
12100	315.7	12188.4
12200	318.3	12288.4
12300	320.9	12388.4
12400	323.4	12488.4
12500	326.0	12588.4
12600	328.6	12688.4

Diamond Lake
File: \\admn-file-vm03\users$\101782\Documents\BATHTUB\Elm Creek\Diamond Lake\Diamond Lake 2010-2011 Grass Lake Outlet (8-18-2015).btb
Load / Response
Tributary: All
Segment: Area-Wtd Mean
Variable: TOTAL P MG/M3

Scale Factor	Flow hm3/yr	Load kg/yr	Conc TOTAL P MG/M3 mg/m^3	Mean	CV	Low	High	Watershed Load lbs/yr	Total Load lbs/yr
Base:	2.9	906.1	311.6	116.2	0.29	90.4	149.5	1993.40	2097.24
0.20	2.9	181.2	62.3	40.4	0.23	32.8	49.7	398.68	502.52
0.40	2.9	362.4	124.6	63.0	0.25	50.4	78.7	797.36	901.20
0.60	2.9	543.7	187.0	82.5	0.27	65.3	104.4	1196.04	1299.88
0.80	2.9	724.9	249.3	100.1	0.28	78.4	127.8	1594.72	1698.56
1.00	2.9	906.1	311.6	116.2	0.29	90.4	149.5	1993.40	2097.24
1.20	2.9	1087.3	373.9	131.3	0.29	101.5	169.8	2392.08	2495.92
1.40	2.9	1268.5	436.2	145.4	0.30	111.9	189.1	2790.76	2894.60
1.60	2.9	1449.7	498.5	158.9	0.31	121.7	207.5	3189.44	3293.28
1.80	2.9	1631.0	560.9	171.7	0.31	131.1	225.0	3588.12	3691.96
2.00	2.9	1812.2	623.2	184.0	0.31	140.0	241.9	3986.80	4090.64

Watershed Load lbs/yr	TP µg/L	Total Load lbs/yr
550.0	49.6	653.8
600.0	52.6	703.8
650.0	55.4	753.8
700.0	58.2	803.8
732.0	60.0	835.8
753.0	61.1	856.8
800.0	63.6	903.8
850.0	66.2	953.8
900.0	68.7	1003.8
950.0	71.2	1053.8
1000.0	73.7	1103.8
1050.0	76.1	1153.8
1100.0	78.5	1203.8
1150.0	80.8	1253.8
1200.0	83.1	1303.8
1250.0	85.4	1353.8
1300.0	87.7	1403.8
1350.0	89.9	1453.8
1400.0	92.1	1503.8
1450.0	94.2	1553.8
1500.0	96.4	1603.8
1550.0	98.5	1653.8
1575.9	99.6	1679.7
1600.0	100.6	1703.8
1650.0	102.6	1753.8
1700.0	104.7	1803.8
1750.0	106.7	1853.8
1800.0	108.7	1903.8
1850.0	110.7	1953.8
1900.0	112.7	2003.8
1950.0	114.6	2053.8
2000.0	116.6	2103.8
2050.0	118.5	2153.8
2100.0	120.4	2203.8
2150.0	122.3	2253.8
2200.0	124.1	2303.8
2250.0	126.0	2353.8
2300.0	127.8	2403.8
2350.0	129.7	2453.8
2400.0	131.5	2503.8
2450.0	133.3	2553.8
2500.0	135.1	2603.8
2550.0	136.9	2653.8
2600.0	138.6	2703.8
2650.0	140.4	2753.8
2700.0	142.1	2803.8
2750.0	143.9	2853.8
2800.0	145.6	2903.8
2850.0	147.3	2953.8
2900.0	149.0	3002.1

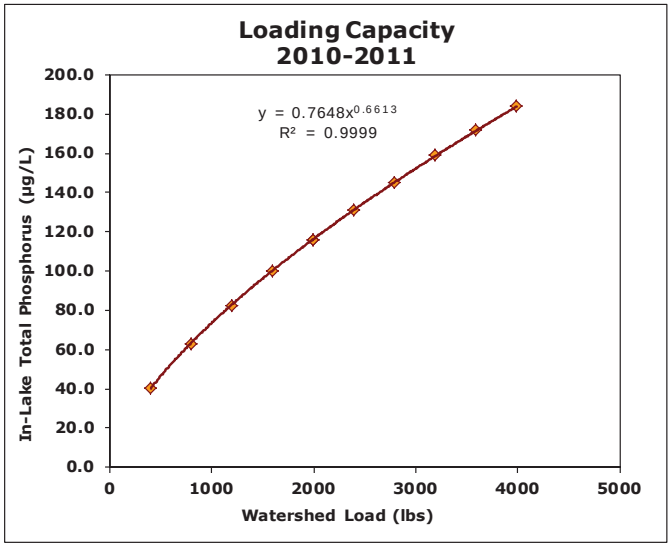

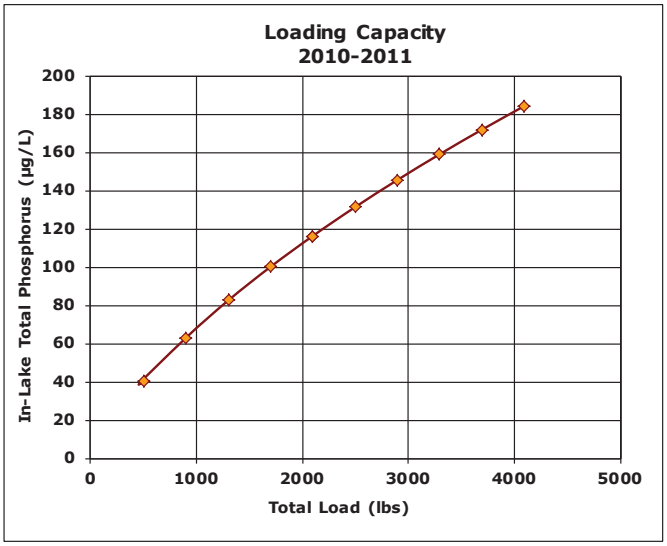

Cowley Lake
File: \\admn-file-vm03\users$\101782\Documents\BATHTUB\Elm Creek\Cowley Lake\Cowley 2006 (8-19-2015).btb
Load / Response
Tributary: All
Segment: Area-Wtd Mean
Variable: TOTAL P MG/M3

Scale Factor	Flow hm3/yr	Load kg/yr	Conc TOTAL P MG/M3 mg/m^3	Mean	CV	Low	High	Watershed Load lbs/yr	Total Load lbs/yr
Base:	0.6	189.9	324.7	269.6	0.08	248.8	292.0	417.89	426.71
0.20	0.6	38.0	64.9	58.3	0.10	53.3	63.9	83.58	92.40
0.40	0.6	76.0	129.9	111.1	0.09	102.3	120.8	167.16	175.98
0.60	0.6	114.0	194.8	163.9	0.08	151.2	177.8	250.73	259.55
0.80	0.6	152.0	259.8	216.8	0.08	200.0	234.9	334.31	343.13
1.00	0.6	189.9	324.7	269.6	0.08	248.8	292.0	417.89	426.71
1.20	0.6	227.9	389.6	322.4	0.08	297.6	349.2	501.47	510.29
1.40	0.6	265.9	454.6	375.2	0.08	346.4	406.3	585.04	593.86
1.60	0.6	303.9	519.5	428.0	0.08	395.2	463.5	668.62	677.44
1.80	0.6	341.9	584.5	480.8	0.08	443.9	520.6	752.20	761.02
2.00	0.6	379.9	649.4	533.6	0.08	492.7	577.8	835.78	844.60

Watershed Load lbs/yr	TP µg/L	Total Load lbs/yr
85.0	59.2	93.8
86.2	60.0	95.0
90.0	62.4	98.8
100.0	68.7	108.8
110.0	75.0	118.8
120.0	81.4	128.8
130.0	87.7	138.8
140.0	94.0	148.8
150.0	100.3	158.8
160.0	106.6	168.8
170.0	113.0	178.8
180.0	119.3	188.8
190.0	125.6	198.8
200.0	131.9	208.8
210.0	138.2	218.8
220.0	144.5	228.8
230.0	150.9	238.8
240.0	157.2	248.8
250.0	163.5	258.8
260.0	169.8	268.8
270.0	176.1	278.8
280.0	182.4	288.8
290.0	188.8	298.8
300.0	195.1	308.8
310.0	201.4	318.8
320.0	207.7	328.8
330.0	214.0	338.8
340.0	220.4	348.8
350.0	226.7	358.8
360.0	233.0	368.8
370.0	239.3	378.8
380.0	245.6	388.8
390.0	251.9	398.8
400.0	258.3	408.8
410.0	264.6	418.8
420.0	270.9	428.8
430.0	277.2	438.8
440.0	283.5	448.8
450.0	289.9	458.8
460.0	296.2	468.8
470.0	302.5	478.8
480.0	308.8	488.8

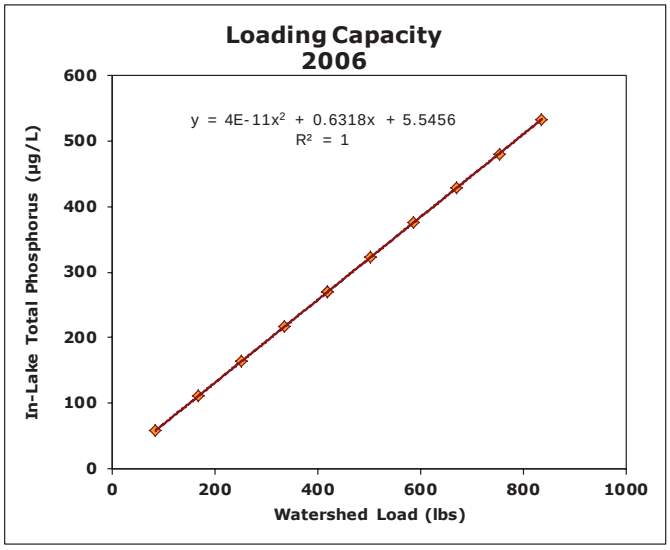

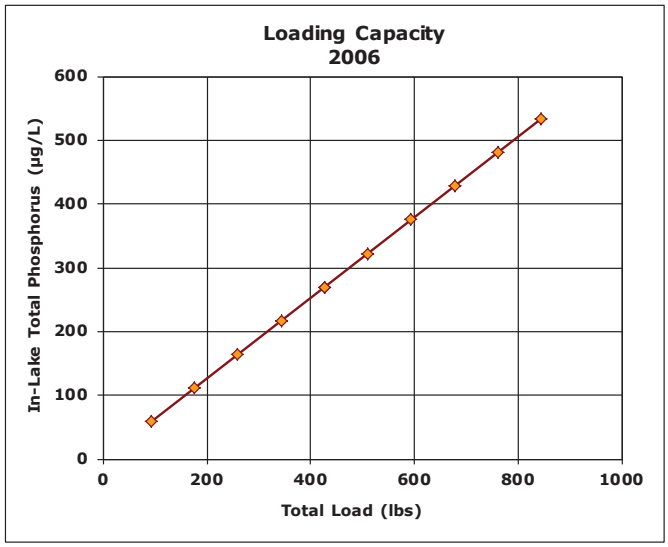

Henry Lake
File: \\admn-file-vm03\users$\101782\Documents\BATHTUB\Elm Creek\Henry Lake\Henry Lake 2009 & 2011 (8-19-2015).btb
Load / Response
Tributary: All
Segment: Area-Wtd Mean
Variable: TOTAL P MG/M3

Scale Factor	Flow hm3/yr	Load kg/yr	Conc TOTAL P MG/M3 mg/m^3	Mean	CV	Low	High	Watershed Load lbs/yr	Total Load lbs/yr
Base:	0.5	313.5	645.0	125.4	0.20	104.8	150.1	689.63	702.23
0.20	0.5	62.7	129.0	51.4	0.17	43.8	60.3	137.93	150.53
0.40	0.5	125.4	258.0	75.7	0.18	63.9	89.7	275.85	288.45
0.60	0.5	188.1	387.0	94.8	0.19	79.6	112.9	413.78	426.38
0.80	0.5	250.8	516.0	111.1	0.19	93.0	132.7	551.71	564.31
1.00	0.5	313.5	645.0	125.4	0.20	104.8	150.1	689.63	702.23
1.20	0.5	376.2	774.0	138.4	0.20	115.5	166.0	827.56	840.16
1.40	0.5	438.9	903.0	150.4	0.20	125.3	180.6	965.49	978.09
1.60	0.5	501.6	1032.0	161.6	0.20	134.5	194.2	1103.41	1116.01
1.80	0.5	564.2	1161.0	172.1	0.20	143.1	207.0	1241.34	1253.94
2.00	0.5	626.9	1290.0	182.1	0.20	151.3	219.2	1379.27	1391.87

Watershed Load lbs/yr	TP µg/L	Total Load lbs/yr
150.0	54.1	162.6
175.0	58.9	187.6
181.0	60.0	193.6
200.0	63.4	212.6
225.0	67.6	237.6
250.0	71.7	262.6
275.0	75.5	287.6
300.0	79.2	312.6
325.0	82.8	337.6
350.0	86.2	362.6
375.0	89.5	387.6
400.0	92.7	412.6
425.0	95.9	437.6
450.0	98.9	462.6
475.0	101.9	487.6
500.0	104.8	512.6
525.0	107.7	537.6
550.0	110.5	562.6
575.0	113.2	587.6
600.0	115.9	612.6
625.0	118.5	637.6
650.0	121.1	662.6
675.0	123.6	687.6
700.0	126.1	712.6
725.0	128.5	737.6
750.0	131.0	762.6
775.0	133.3	787.6
800.0	135.7	812.6
825.0	138.0	837.6
850.0	140.3	862.6
875.0	142.5	887.6
900.0	144.7	912.6
925.0	146.9	937.6
950.0	149.1	962.6
975.0	151.2	987.6
1000.0	153.4	1012.6
1025.0	155.4	1037.6
1050.0	157.5	1062.6
1075.0	159.6	1087.6
1100.0	161.6	1112.6
1125.0	163.6	1137.6
1150.0	165.6	1162.6

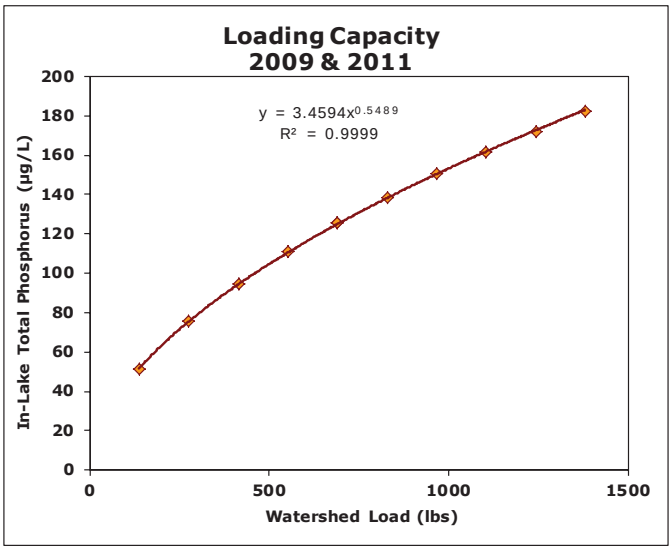

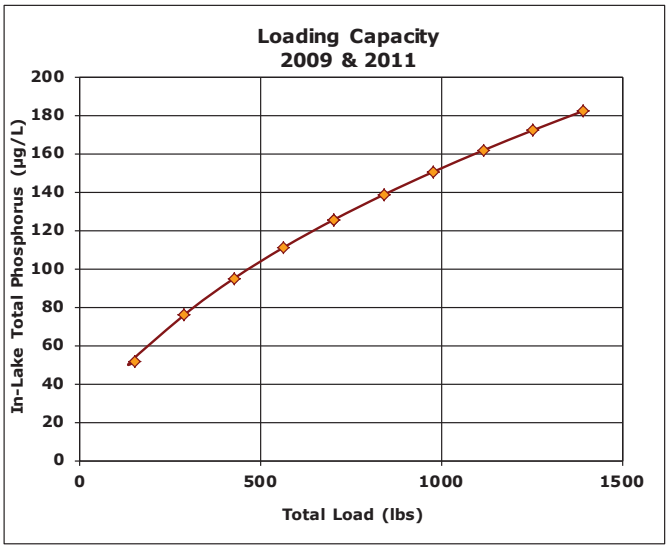

Sylvan Lake
File: \\admn-file-vm03\users$\101782\Documents\BATHTUB\Elm Creek\Sylvan\Sylvan Lake 9-10-2015.btb
Load / Response
Tributary: All
Segment: Area-Wtd Mean
Variable: TOTAL P MG/M3

Scale Factor	Flow hm3/yr	Load kg/yr	Conc mg/m³	TOTAL P MG/M3 Mean	CV	Low	High	Watershed Load lbs/yr	Total Load lbs/yr
Base:	0.2	129.8	520.5	95.7	0.37	69.8	131.3	285.60	325.28
0.20	0.2	26.0	104.1	28.5	0.42	20.0	40.4	57.12	96.80
0.40	0.2	51.9	208.2	45.3	0.39	32.6	62.8	114.24	153.92
0.60	0.2	77.9	312.3	62.1	0.38	45.1	85.6	171.36	211.04
0.80	0.2	103.9	416.4	78.9	0.37	57.4	108.4	228.48	268.16
1.00	0.2	129.8	520.5	95.7	0.37	69.8	131.3	285.60	325.28
1.20	0.2	155.8	624.6	112.5	0.37	82.2	154.2	342.72	382.40
1.40	0.2	181.7	728.8	129.4	0.37	94.5	177.1	399.84	439.52
1.60	0.2	207.7	832.9	146.2	0.37	106.8	200.0	456.96	496.64
1.80	0.2	233.7	937.0	163.0	0.37	119.1	223.0	514.08	553.76
2.00	0.2	259.6	1041.1	179.8	0.37	131.5	245.9	571.20	610.88

Watershed Load lbs/yr	TP µg/L	Total Load lbs/yr
150.0	55.8	189.7
160.0	58.7	199.7
164.3	60.0	204.0
170.0	61.7	209.7
180.0	64.6	219.7
200.0	70.5	239.7
220.0	76.4	259.7
240.0	82.3	279.7
260.0	88.2	299.7
280.0	94.1	319.7
300.0	100.0	339.7
320.0	105.8	359.7
340.0	111.7	379.7
360.0	117.6	399.7
380.0	123.5	419.7
400.0	129.4	439.7
420.0	135.3	459.7
440.0	141.2	479.7
460.0	147.1	499.7
480.0	153.0	519.7
500.0	158.8	539.7
520.0	164.7	559.7
540.0	170.6	579.7
560.0	176.5	599.7
580.0	182.4	619.7
600.0	188.3	639.7
620.0	194.2	659.7
640.0	200.1	679.7
660.0	205.9	699.7
680.0	211.8	719.7
700.0	217.7	739.7
720.0	223.6	759.7
740.0	229.5	779.7
760.0	235.4	799.7
780.0	241.3	819.7
800.0	247.2	839.7
820.0	253.0	859.7
840.0	258.9	879.7
860.0	264.8	899.7
880.0	270.7	919.7
900.0	276.6	939.7
920.0	282.5	959.7

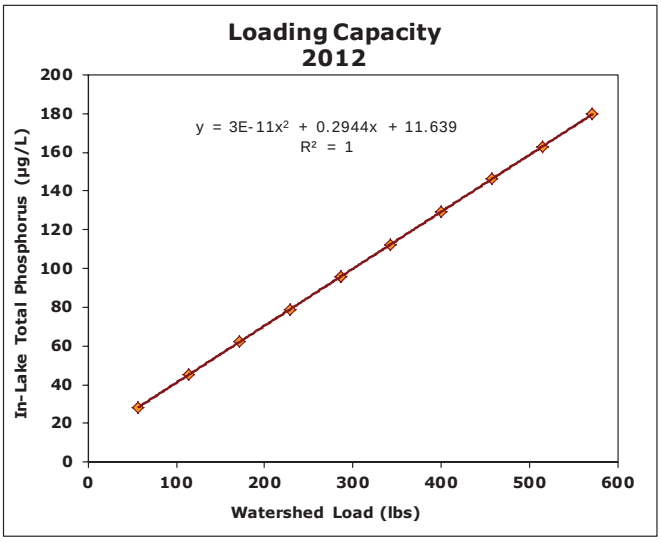

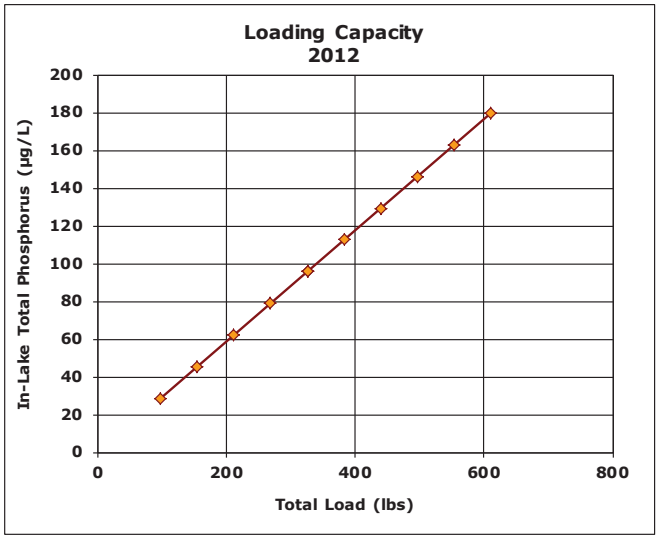

Goose Lake
File: C:\Documents and Settings\nri\My Documents\BATHTUB\Elm Creek\Goose Lake\Goose Lake with TN 9-8-2014.btb
Load / Response
Tributary: All
Segment: Area-Wtd Mean
Variable: TOTAL P MG/M3

Scale Factor	Flow hm3/yr	Load kg/yr	Conc mg/m³	TOTAL P MG/M3 Mean	CV	Low	High	Watershed Load lbs/yr	Total Load lbs/yr
Base:	0.1	20.3	150.4	108.9	0.37	79.8	148.8	44.72	61.92
0.20	0.1	4.1	30.1	58.6	0.45	40.3	85.1	8.94	26.14
0.40	0.1	8.1	60.2	72.9	0.41	51.7	102.8	17.89	35.09
0.60	0.1	12.2	90.3	85.9	0.39	61.9	119.2	26.83	44.03
0.80	0.1	16.3	120.4	97.8	0.37	71.2	134.5	35.77	52.97
1.00	0.1	20.3	150.4	108.9	0.37	79.8	148.8	44.72	61.92
1.20	0.1	24.4	180.5	119.4	0.36	87.8	162.3	53.66	70.86
1.40	0.1	28.5	210.6	129.2	0.36	95.3	175.2	62.60	79.80
1.60	0.1	32.5	240.7	138.6	0.35	102.5	187.4	71.55	88.75
1.80	0.1	36.6	270.8	147.6	0.35	109.4	199.1	80.49	97.69
2.00	0.1	40.7	300.9	156.2	0.35	115.9	210.4	89.43	106.63

Watershed Load lbs/yr	TP µg/L	Total Load lbs/yr
8.0	57.7	25.2
9.0	59.3	26.2
9.5	60.0	26.7
10.0	60.8	27.2
11.0	62.3	28.2
12.0	63.9	29.2
13.0	65.4	30.2
14.0	66.9	31.2
15.0	68.4	32.2
16.0	69.8	33.2
17.0	71.3	34.2
18.0	72.8	35.2
19.0	74.2	36.2
20.0	75.7	37.2
21.0	77.1	38.2
22.0	78.6	39.2
23.0	80.0	40.2
24.0	81.4	41.2
25.0	82.8	42.2
26.0	84.2	43.2
27.0	85.6	44.2
28.0	87.0	45.2
29.0	88.4	46.2
30.0	89.7	47.2
31.0	91.1	48.2
32.0	92.4	49.2
33.0	93.8	50.2
34.0	95.1	51.2
35.0	96.4	52.2
36.0	97.7	53.2
37.0	99.0	54.2
38.0	100.3	55.2
39.0	101.6	56.2
40.0	102.9	57.2
41.0	104.2	58.2
42.0	105.4	59.2
43.0	106.7	60.2
44.0	107.9	61.2
45.0	109.1	62.2
46.0	110.4	63.2
47.0	111.6	64.2
48.0	112.8	65.2

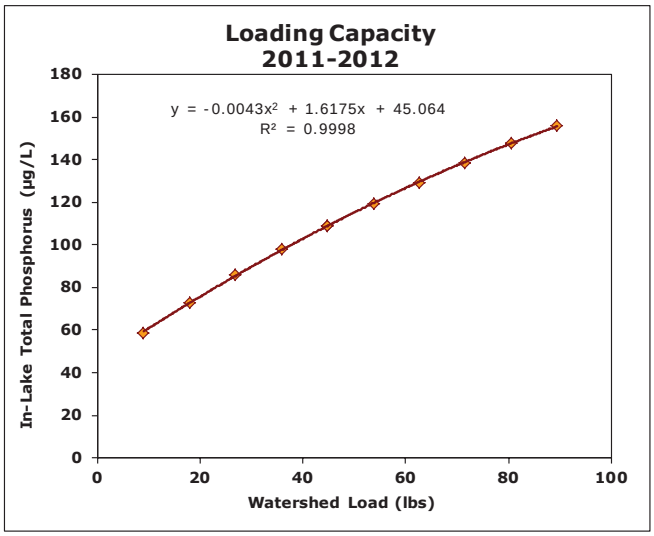

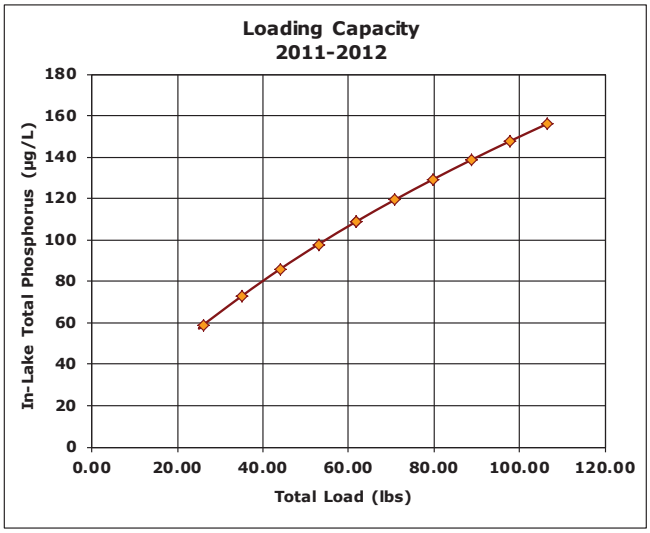

Appendix C7
Bathtub Model Inputs and Outputs

Fish Lake
File: **\\admn-file-vm03\users$\101782\Documents\BATHTUB\Elm Creek\Fish Lake\Fish Lake 2010-2012 (6-3-2015).btb**
Description:

one segment

suggested default values for model options & model coefficients

nitrogen budgets not modeled

phosphorus budgets based upon total P only
availability factors ignored

Global Variables	Mean	CV
Averaging Period (yrs)	1	0.0
Precipitation (m)	0.7112	0.2
Evaporation (m)	0.7	0.3
Storage Increase (m)	0	0.0

Atmos. Loads (kg/km^2-yr	Mean	CV
Conserv. Substance	0	0.00
Total P	30	0.50
Total N	1000	0.50
Ortho P	15	0.50
Inorganic N	500	0.50

Model Options	Code	Description
Conservative Substance	0	NOT COMPUTED
Phosphorus Balance	3	2ND ORDER, FIXED
Nitrogen Balance	0	NOT COMPUTED
Chlorophyll-a	6	P, CARLSON TSI
Secchi Depth	1	VS. CHLA & TURBIDITY
Dispersion	1	FISCHER-NUMERIC
Phosphorus Calibration	1	DECAY RATES
Nitrogen Calibration	1	DECAY RATES
Error Analysis	1	MODEL & DATA
Availability Factors	0	IGNORE
Mass-Balance Tables	1	USE ESTIMATED CONCS
Output Destination	2	EXCEL WORKSHEET

Segment Morphometry

		Outflow		Area	Depth	Length	Mixed Depth (m)		Hypol Depth		Non-Algal Turb (m^{-1})		Internal Loads (mg/m2-day) Conserv.		Total P		Total N	
Seg	Name	Segment	Group	km^2	m	km	Mean	CV	Mean	CV	Mean	CV	Mean	CV	Mean	CV	Mean	CV
1	Fish Lake	0	1	0.96	5.73	2.35	4.8	0.12	2.27	0	0.08	0.2	0	0	2.04	0	0	0

Segment Observed Water Quality

	Conserv		Total P (ppb)		Total N (ppb)		Chl-a (ppb)		Secchi (m)		Organic N (ppb)		TP - Ortho P (ppb)		HOD (ppb/day)		MOD (ppb/day)	
Seg	Mean	CV	Mean	CV	Mean	CV	Mean	CV	Mean	CV	Mean	CV	Mean	CV	Mean	CV	Mean	CV
1	0	0	42	0	0	0	21	0	1.42	0	0	0	0	0	105	0	0	0

Segment Calibration Factors

	Dispersion Rate		Total P (ppb)		Total N (ppb)		Chl-a (ppb)		Secchi (m)		Organic N (ppb)		TP - Ortho P (ppb)		HOD (ppb/day)		MOD (ppb/day)	
Seg	Mean	CV	Mean	CV	Mean	CV	Mean	CV	Mean	CV	Mean	CV	Mean	CV	Mean	CV	Mean	CV
1	1	0	1	0	1	0	1.07	0	0.85	0	1	0	1	0	1	0	1	0

Tributary Data

				Dr Area	Flow (hm^3/yr)		Conserv.		Total P (ppb)		Total N (ppb)		Ortho P (ppb)		Inorganic N (ppb)	
Trib	Trib Name	Segment	Type	km^2	Mean	CV	Mean	CV	Mean	CV	Mean	CV	Mean	CV	Mean	CV
1	FL5	1	1	0.091	0.02	0.1	0	0	262.4	0.2	0	0	0	0	0	0
2	FL4	1	1	0.697	0.151	0.1	0	0	197.1	0.2	0	0	0	0	0	0
3	FL7	1	1	1.872	0.361	0.1	0	0	210.3	0.2	0	0	0	0	0	0
4	FL6	1	1	0.362	0.091	0	0	0	166.1	0	0	0	0	0	0	0
5	Direct (FL-A34)	1	1	1.566	0.298	0	0	0	266.5	0	0	0	0	0	0	0
6	Direct (FL-A15)	1	1	0.187	0.034	0	0	0	182.8	0	0	0	0	0	0	0
7	Edward Lake (FL-A13)	1	1	0.074	0.018	0	0	0	273.6	0	0	0	0	0	0	0
8	FL1	1	1	0.287	0.057	0	0	0	226.5	0	0	0	0	0	0	0
9	FL2	1	1	1.005	0.194	0	0	0	240.8	0	0	0	0	0	0	0
10	Edward Lake	1	1	0.398	0.05	0	0	0	114.9	0	0	0	0	0	0	0

Model Coefficients	Mean	CV
Dispersion Rate	1.000	0.70
Total Phosphorus	1.000	0.45
Total Nitrogen	1.000	0.55
Chl-a Model	1.000	0.26
Secchi Model	1.000	0.10
Organic N Model	1.000	0.12
TP-OP Model	1.000	0.15
HODv Model	1.000	0.15
MODv Model	1.000	0.22
Secchi/Chla Slope (m^2/mg)	0.025	0.00
Minimum Qs (m/yr)	0.100	0.00
Chl-a Flushing Term	1.000	0.00
Chl-a Temporal CV	0.620	0
Avail. Factor - Total P	0.330	0
Avail. Factor - Ortho P	1.930	0
Avail. Factor - Total N	0.590	0
Avail. Factor - Inorganic N	0.790	0

Fish Lake

File: \\admn-file-vm03\users$\101782\Documents\BATHTUB\Elm Creek\Fish Lake\Fish Lake 2010-2012 (6-3-2015).btb

Segment Mass Balance Based Upon Predicted Concentrations

Component: TOTAL P **Segment: 1 Fish Lake**

Trib	Type	Location	Flow hm^3/yr	Flow %Total	Load kg/yr	Load %Total	Conc mg/m^3
1	1	FL5	0.0	1.0%	5.2	0.5%	262
2	1	FL4	0.2	7.7%	29.8	2.9%	197
3	1	FL7	0.4	18.4%	75.9	7.4%	210
4	1	FL6	0.1	4.7%	15.1	1.5%	166
5	1	Direct (FL-A34)	0.3	15.2%	79.4	7.7%	267
6	1	Direct (FL-A15)	0.0	1.7%	6.2	0.6%	183
7	1	Edward Lake (FL-A13)	0.0	0.9%	4.9	0.5%	274
8	1	FL1	0.1	2.9%	12.9	1.3%	227
9	1	FL2	0.2	9.9%	46.7	4.6%	241
10	1	Edward Lake	0.1	2.6%	5.7	0.6%	115
PRECIPITATION			0.7	34.9%	28.8	2.8%	42
INTERNAL LOAD			0.0	0.0%	715.3	69.7%	
TRIBUTARY INFLOW			1.3	65.1%	282.0	27.5%	221
***TOTAL INFLOW			2.0	100.0%	1026.1	100.0%	524
ADVECTIVE OUTFLOW			1.3	65.7%	54.0	5.3%	42
***TOTAL OUTFLOW			1.3	65.7%	54.0	5.3%	42
***EVAPORATION			0.7	34.3%	0.0	0.0%	
***RETENTION			0.0	0.0%	972.1	94.7%	

Hyd. Residence Time =	4.2816	yrs
Overflow Rate =	1.3	m/yr
Mean Depth =	5.7	m

Fish Lake

File: **\\admn-file-vm03\users$\101782\Documents\BATHTUB\Elm Creek\Fish Lake\Fish Lake 2010-2012 (6-3-2015).btb**

Predicted & Observed Values Ranked Against CE Model Development Dataset

Segment: **1 Fish Lake**

	Predicted Values--->			Observed Values--->		
Variable	**Mean**	**CV**	**Rank**	**Mean**	**CV**	**Rank**
TOTAL P MG/M3	42.0	0.21	44.2%	42.0		44.2%
CHL-A MG/M3	21.0	0.40	85.3%	21.0		85.2%
SECCHI M	1.4	0.37	63.4%	1.4		64.1%
ORGANIC N MG/M3	642.9	0.33	72.5%			
TP-ORTHO-P MG/M3	35.3	0.46	56.7%			
HOD-V MG/M3-DAY	485.0	0.25	99.3%	105.0		66.1%
MOD-V MG/M3-DAY	264.9	0.33	97.2%			
ANTILOG PC-1	391.7	0.72	64.0%	386.3		63.6%
ANTILOG PC-2	13.8	0.08	92.6%	13.9		92.8%
TURBIDITY 1/M	0.1	0.20	1.1%	0.1	0.20	1.1%
ZMIX * TURBIDITY	0.4	0.23	0.3%	0.4	0.23	0.3%
ZMIX / SECCHI	3.4	0.38	28.4%	3.4	0.12	27.7%
CHL-A * SECCHI	29.5	0.12	93.3%	29.8		93.5%
CHL-A / TOTAL P	0.5	0.28	93.0%	0.5		93.0%
FREQ(CHL-a>10) %	81.3	0.22	85.3%	81.2		85.2%
FREQ(CHL-a>20) %	41.0	0.62	85.3%	40.8		85.2%
FREQ(CHL-a>30) %	18.9	0.93	85.3%	18.8		85.2%
FREQ(CHL-a>40) %	8.9	1.18	85.3%	8.9		85.2%
FREQ(CHL-a>50) %	4.4	1.38	85.3%	4.4		85.2%
FREQ(CHL-a>60) %	2.3	1.55	85.3%	2.3		85.2%
CARLSON TSI-P	58.1	0.05	44.2%	58.0		44.2%
CARLSON TSI-CHLA	60.5	0.07	85.3%	60.5		85.2%
CARLSON TSI-SEC	55.1	0.10	36.6%	54.9		35.9%

Rice Lake
File: **\\admn-file-vm03\users$\101782\Documents\BATHTUB\Elm Creek\Rice Lake\Rice Lake 2010-2012 (8-17-2015).btb**
Description:

one segment

suggested default values for model options & model coefficients

nitrogen budgets not modeled

phosphorus budgets based upon total P only
availability factors ignored

Global Variables	Mean	CV
Averaging Period (yrs)	1	0.0
Precipitation (m)	0.7112	0.2
Evaporation (m)	0.7	0.3
Storage Increase (m)	0	0.0

Atmos. Loads (kg/km^2-yr	Mean	CV
Conserv. Substance	0	0.00
Total P	30	0.50
Total N	1000	0.50
Ortho P	15	0.50
Inorganic N	500	0.50

Model Options	Code	Description
Conservative Substance	0	NOT COMPUTED
Phosphorus Balance	7	SETTLING VELOCITY
Nitrogen Balance	0	NOT COMPUTED
Chlorophyll-a	4	P, LINEAR
Secchi Depth	1	VS. CHLA & TURBIDITY
Dispersion	1	FISCHER-NUMERIC
Phosphorus Calibration	1	DECAY RATES
Nitrogen Calibration	1	DECAY RATES
Error Analysis	1	MODEL & DATA
Availability Factors	0	IGNORE
Mass-Balance Tables	1	USE ESTIMATED CONCS
Output Destination	2	EXCEL WORKSHEET

Segment Morphometry

		Outflow		Area	Depth	Length	Mixed Depth (m)		Hypol Depth		Non-Algal Turb (m^{-1})		Internal Loads (mg/m2-day) Conserv.		Total P		Total N	
Seg	Name	Segment	Group	km^2	m	km	Mean	CV	Mean	CV	Mean	CV	Mean	CV	Mean	CV	Mean	CV
1	Rice Lake	0	1	1.336	2.14	1.6	2.14	0.12	0	0	0.08	0.2	0	0	3.04	0	0	0

Segment Observed Water Quality

	Conserv		Total P (ppb)		Total N (ppb)		Chl-a (ppb)		Secchi (m)		Organic N (ppb)		TP - Ortho P (ppb)		HOD (ppb/day)		MOD (ppb/day)	
Seg	Mean	CV	Mean	CV	Mean	CV	Mean	CV	Mean	CV	Mean	CV	Mean	CV	Mean	CV	Mean	CV
1	0	0	326	0	0	0	100.4	0	0.81	0	0	0	0	0	0	0	0	0

Segment Calibration Factors

	Dispersion Rate		Total P (ppb)		Total N (ppb)		Chl-a (ppb)		Secchi (m)		Organic N (ppb)		TP - Ortho P (ppb)		HOD (ppb/day)		MOD (ppb/day)	
Seg	Mean	CV	Mean	CV	Mean	CV	Mean	CV	Mean	CV	Mean	CV	Mean	CV	Mean	CV	Mean	CV
1	1	0	1	0	1	0	1.1	0	2	0	1	0	1	0	1	0	1	0

Tributary Data

				Dr Area	Flow (hm^3/yr)		Conserv.		Total P (ppb)		Total N (ppb)		Ortho P (ppb)		Inorganic N (ppb)	
Trib	Trib Name	Segment	Type	km^2	Mean	CV	Mean	CV	Mean	CV	Mean	CV	Mean	CV	Mean	CV
1	EC-77	1	1	47.47	11.68	0.1	0	0	275	0.2	0	0	0	0	0	0
2	EC-P53	1	1	5.68	0.87	0.1	0	0	275	0.2	0	0	0	0	0	0
3	EC-P78	1	1	4.47	1.16	0.1	0	0	198.03	0.2	0	0	0	0	0	0
4	Rice West Direct (EC-A79)	1	1	1.57	0.28	0	0	0	365.03	0	0	0	0	0	0	0
5	Rice Main Direct (EC-A89)	1	1	3.29	0.95	0	0	0	377.7	0	0	0	0	0	0	0
6	EC-P85	1	1	0.16	0.064	0	0	0	199.4	0	0	0	0	0	0	0
7	Fish Lake	1	1	8.02	1.22	0	0	0	42.5	0	0	0	0	0	0	0

Model Coefficients	Mean	CV
Dispersion Rate	1.000	0.70
Total Phosphorus	1.000	0.45
Total Nitrogen	1.000	0.55
Chl-a Model	1.000	0.26
Secchi Model	1.000	0.10
Organic N Model	1.000	0.12
TP-OP Model	1.000	0.15
HODv Model	1.000	0.15
MODv Model	1.000	0.22
Secchi/Chla Slope (m^2/mg)	0.025	0.00
Minimum Qs (m/yr)	0.100	0.00
Chl-a Flushing Term	1.000	0.00
Chl-a Temporal CV	0.620	0
Avail. Factor - Total P	0.330	0
Avail. Factor - Ortho P	1.930	0
Avail. Factor - Total N	0.590	0
Avail. Factor - Inorganic N	0.790	0

Rice Lake

File: \\admn-file-vm03\users$\101782\Documents\BATHTUB\Elm Creek\Rice Lake\Rice Lake 2010-2012 (8-17-2015).btb

Segment Mass Balance Based Upon Predicted Concentrations

Component: TOTAL P **Segment: 1 Rice Lake**

Trib	Type	Location	Flow hm^3/yr	Flow %Total	Load kg/yr	Load %Total	Conc mg/m^3
1	1	EC-77	11.7	68.0%	3212.0	56.1%	275
2	1	EC-P53	0.9	5.1%	239.3	4.2%	275
3	1	EC-P78	1.2	6.8%	229.7	4.0%	198
4	1	Rice West Direct (EC-A79	0.3	1.6%	102.2	1.8%	365
5	1	Rice Main Direct (EC-A89)	0.9	5.5%	358.8	6.3%	378
6	1	EC-P85	0.1	0.4%	12.8	0.2%	199
7	1	Fish Lake	1.2	7.1%	51.9	0.9%	43
PRECIPITATION			1.0	5.5%	40.1	0.7%	42
INTERNAL LOAD			0.0	0.0%	1483.4	25.9%	
TRIBUTARY INFLOW			16.2	94.5%	4206.6	73.4%	259
***TOTAL INFLOW			17.2	100.0%	5730.1	100.0%	334
ADVECTIVE OUTFLOW			16.2	94.6%	5294.5	92.4%	326
***TOTAL OUTFLOW			16.2	94.6%	5294.5	92.4%	326
***EVAPORATION			0.9	5.4%	0.0	0.0%	
***RETENTION			0.0	0.0%	435.6	7.6%	

Hyd. Residence Time =	0.1761	yrs
Overflow Rate =	12.2	m/yr
Mean Depth =	2.1	m

Rice Lake

File: **\\admn-file-vm03\users$\101782\Documents\BATHTUB\Elm Creek\Rice Lake\Rice Lake 2010-2012 (8-17-2015).btb**

Predicted & Observed Values Ranked Against CE Model Development Dataset

Segment: **1 Rice Lake**

	Predicted Values--->			Observed Values--->		
Variable	**Mean**	**CV**	**Rank**	**Mean**	**CV**	**Rank**
TOTAL P MG/M3	326.0	0.12	98.3%	326.0		98.3%
CHL-A MG/M3	100.4	0.29	99.9%	100.4		99.9%
SECCHI M	0.8	0.29	32.9%	0.8		35.3%
ORGANIC N MG/M3	2452.6	0.29	99.9%			
TP-ORTHO-P MG/M3	176.5	0.33	96.9%			
ANTILOG PC-1	3009.6	0.54	97.2%	2877.4		97.0%
ANTILOG PC-2	24.7	0.08	99.5%	25.7		99.6%
TURBIDITY 1/M	0.1	0.20	1.1%	0.1	0.20	1.1%
ZMIX * TURBIDITY	0.2	0.23	0.0%	0.2	0.23	0.0%
ZMIX / SECCHI	2.8	0.32	17.5%	2.6	0.12	15.5%
CHL-A * SECCHI	77.5	0.10	99.8%	81.3		99.8%
CHL-A / TOTAL P	0.3	0.26	76.1%	0.3		76.1%
FREQ(CHL-a>10) %	100.0	0.00	99.9%	100.0		99.9%
FREQ(CHL-a>20) %	98.9	0.01	99.9%	98.9		99.9%
FREQ(CHL-a>30) %	94.9	0.05	99.9%	94.9		99.9%
FREQ(CHL-a>40) %	88.0	0.10	99.9%	88.0		99.9%
FREQ(CHL-a>50) %	79.2	0.16	99.9%	79.2		99.9%
FREQ(CHL-a>60) %	69.9	0.22	99.9%	69.9		99.9%
CARLSON TSI-P	87.6	0.02	98.3%	87.6		98.3%
CARLSON TSI-CHLA	75.8	0.04	99.9%	75.8		99.9%
CARLSON TSI-SEC	63.7	0.07	67.1%	63.0		64.7%

Diamond Lake

File: **\\admn-file-vm03\users$\101782\Documents\BATHTUB\Elm Creek\Diamond Lake\Diamond Lake 2010-2011 Grass Lake Outlet (8-18-2015).btb**

Description:

Diamond Lake Model for 2010-2011

Global Variables	Mean	CV
Averaging Period (yrs)	1	0.0
Precipitation (m)	0.69	0.0
Evaporation (m)	0.7	0.0
Storage Increase (m)	0	0.0

Atmos. Loads (kg/km^2-yr	Mean	CV
Conserv. Substance	0	0.00
Total P	30	0.50
Total N	1000	0.50
Ortho P	15	0.50
Inorganic N	500	0.50

Model Options	Code	Description
Conservative Substance	0	NOT COMPUTED
Phosphorus Balance	8	CANF & BACH, LAKES
Nitrogen Balance	5	BACHMAN FLUSHING
Chlorophyll-a	4	P, LINEAR
Secchi Depth	1	VS. CHLA & TURBIDITY
Dispersion	1	FISCHER-NUMERIC
Phosphorus Calibration	1	DECAY RATES
Nitrogen Calibration	1	DECAY RATES
Error Analysis	1	MODEL & DATA
Availability Factors	0	IGNORE
Mass-Balance Tables	1	USE ESTIMATED CONCS
Output Destination	2	EXCEL WORKSHEET

Segment Morphometry

		Outflow		Area	Depth	Length	Mixed Depth (m)		Hypol Depth		Non-Algal Turb (m^{-1})		Internal Loads (mg/m2-day) Conserv.		Total P		Total N	
Seg	Name	Segment	Group	km^2	m	km	Mean	CV	Mean	CV	Mean	CV	Mean	CV	Mean	CV	Mean	CV
1	Diamond Lake	0	1	1.57	1.21	1.63	1.21	0	1	0	0.08	0	0	0	0.63	0	0	0

Segment Observed Water Quality

	Conserv		Total P (ppb)		Total N (ppb)		Chl-a (ppb)		Secchi (m)		Organic N (ppb)		TP - Ortho P (ppb)		HOD (ppb/day)		MOD (ppb/day)	
Seg	Mean	CV	Mean	CV	Mean	CV	Mean	CV	Mean	CV	Mean	CV	Mean	CV	Mean	CV	Mean	CV
1	0	0	145.3	0	2000	0	43	0	1.3	0	0	0	0	0	0	0	0	0

Segment Calibration Factors

	Dispersion Rate		Total P (ppb)		Total N (ppb)		Chl-a (ppb)		Secchi (m)		Organic N (ppb)		TP - Ortho P (ppb)		HOD (ppb/day)		MOD (ppb/day)	
Seg	Mean	CV	Mean	CV	Mean	CV	Mean	CV	Mean	CV	Mean	CV	Mean	CV	Mean	CV	Mean	CV
1	1	0	1	0	0.28	0	1.055	0	1.5	0	1	0	1	0	1	0	1	0

Tributary Data

				Dr Area	Flow (hm^3/yr)		Conserv.		Total P (ppb)		Total N (ppb)		Ortho P (ppb)		Inorganic N (ppb)	
Trib	Trib Name	Segment	Type	km^2	Mean	CV	Mean	CV	Mean	CV	Mean	CV	Mean	CV	Mean	CV
1	Diamond-Direct	1	1	2.03	0.212	0	0	0	437.3	0	2780	0	161.1	0	0	0
2	Upstream-Grass Lake	1	1	8.41	2.696	0	0	0	301.7	0	1690	0	111	0	0	0

Model Coefficients	Mean	CV
Dispersion Rate	1.000	0.70
Total Phosphorus	1.000	0.45
Total Nitrogen	1.000	0.55
Chl-a Model	1.000	0.26
Secchi Model	1.000	0.10
Organic N Model	1.000	0.12
TP-OP Model	1.000	0.15
HODv Model	1.000	0.15
MODv Model	1.000	0.22
Secchi/Chla Slope (m^2/mg)	0.025	0.00
Minimum Qs (m/yr)	0.100	0.00
Chl-a Flushing Term	1.000	0.00
Chl-a Temporal CV	0.620	0
Avail. Factor - Total P	0.330	0
Avail. Factor - Ortho P	1.930	0
Avail. Factor - Total N	0.590	0
Avail. Factor - Inorganic N	0.790	0

Diamond Lake

File: \\admn-file-vm03\users$\101782\Documents\BATHTUB\Elm Creek\Diamond Lake\Diamond Lake 2010-2011 Grass Lake Outlet (8-18-2015).btb

Segment Mass Balance Based Upon Predicted Concentrations

Component: TOTAL P **Segment: 1 Diamond Lake**

Trib	Type	Location	Flow hm^3/yr	Flow %Total	Load kg/yr	Load %Total	Conc mg/m^3
1	1	Diamond-Direct	0.2	5.3%	92.7	7.1%	437
2	1	Upstream-Grass Lake	2.7	67.5%	813.4	61.9%	302
PRECIPITATION			1.1	27.1%	47.1	3.6%	43
INTERNAL LOAD			0.0	0.0%	361.3	27.5%	
TRIBUTARY INFLOW			2.9	72.9%	906.1	68.9%	312
***TOTAL INFLOW			4.0	100.0%	1314.5	100.0%	329
ADVECTIVE OUTFLOW			2.9	72.5%	420.4	32.0%	145
***TOTAL OUTFLOW			2.9	72.5%	420.4	32.0%	145
***EVAPORATION			1.1	27.5%	0.0	0.0%	
***RETENTION			0.0	0.0%	894.1	68.0%	

Hyd. Residence Time = 0.6568 yrs
Overflow Rate = 1.8 m/yr
Mean Depth = 1.2 m

Component: TOTAL N **Segment: 1 Diamond Lake**

Trib	Type	Location	Flow hm^3/yr	Flow %Total	Load kg/yr	Load %Total	Conc mg/m^3
1	1	Diamond-Direct	0.2	5.3%	589.4	8.8%	2780
2	1	Upstream-Grass Lake	2.7	67.5%	4556.2	67.8%	1690
PRECIPITATION			1.1	27.1%	1570.0	23.4%	1449
TRIBUTARY INFLOW			2.9	72.9%	5145.6	76.6%	1769
***TOTAL INFLOW			4.0	100.0%	6715.6	100.0%	1683
ADVECTIVE OUTFLOW			2.9	72.5%	5786.3	86.2%	2001
***TOTAL OUTFLOW			2.9	72.5%	5786.3	86.2%	2001
***EVAPORATION			1.1	27.5%	0.0	0.0%	
***RETENTION			0.0	0.0%	929.3	13.8%	

Hyd. Residence Time = 0.6568 yrs
Overflow Rate = 1.8 m/yr
Mean Depth = 1.2 m

Diamond Lake

File: \\admn-file-vm03\users$\101782\Documents\BATHTUB\Elm Creek\Diamond Lake\Diamond Lake 2010-2011 Grass Lake Outlet (8-18-2015).btb

Predicted & Observed Values Ranked Against CE Model Development Dataset

Segment: 1 Diamond Lake

	Predicted Values--->			Observed Values--->		
Variable	**Mean**	**CV**	**Rank**	**Mean**	**CV**	**Rank**
TOTAL P MG/M3	145.4	0.30	89.1%	145.3		89.1%
TOTAL N MG/M3	2000.6	0.14	86.0%	2000.0		86.0%
C.NUTRIENT MG/M3	105.8	0.18	91.3%	105.7		91.3%
CHL-A MG/M3	42.9	0.40	97.6%	43.0		97.6%
SECCHI M	1.3	0.38	59.7%	1.3		59.6%
ORGANIC N MG/M3	1142.0	0.36	95.8%			
TP-ORTHO-P MG/M3	74.2	0.44	83.0%			
HOD-V MG/M3-DAY	1572.6	0.25	100.0%			
MOD-V MG/M3-DAY	629.1	0.33	99.9%			
ANTILOG PC-1	1344.0	0.59	90.3%	828.0		82.4%
ANTILOG PC-2	19.2	0.09	98.1%	21.0		98.8%
(N - 150) / P	12.7	0.34	33.6%	12.7		33.6%
INORGANIC N / P	12.1	0.76	18.3%			
TURBIDITY 1/M	0.1		1.1%	0.1		1.1%
ZMIX * TURBIDITY	0.1		0.0%	0.1		0.0%
ZMIX / SECCHI	0.9	0.38	0.2%	0.9		0.2%
CHL-A * SECCHI	55.8	0.10	99.2%	55.9		99.2%
CHL-A / TOTAL P	0.3	0.26	74.1%	0.3		74.1%
FREQ(CHL-a>10) %	97.9	0.03	97.6%	97.9		97.6%
FREQ(CHL-a>20) %	82.2	0.20	97.6%	82.2		97.6%
FREQ(CHL-a>30) %	60.6	0.41	97.6%	60.7		97.6%
FREQ(CHL-a>40) %	42.2	0.59	97.6%	42.3		97.6%
FREQ(CHL-a>50) %	28.9	0.76	97.6%	29.0		97.6%
FREQ(CHL-a>60) %	19.8	0.90	97.6%	19.8		97.6%
CARLSON TSI-P	75.9	0.06	89.1%	75.9		89.1%
CARLSON TSI-CHLA	67.5	0.06	97.6%	67.5		97.6%
CARLSON TSI-SEC	56.2	0.10	40.3%	56.2		40.4%

Cowley Lake
File: **\\admn-file-vm03\users$\101782\Documents\BATHTUB\Elm Creek\Cowley Lake\Cowley 2006 (8-19-2015).btb**
Description:

Observed WQ data is from 2006
Unit Area Loads from SWAT model are from 2006

Global Variables	Mean	CV
Averaging Period (yrs)	1	0.0
Precipitation (m)	0.7112	0.0
Evaporation (m)	0.7	0.0
Storage Increase (m)	0	0.0

Atmos. Loads (kg/km^2-yr	Mean	CV
Conserv. Substance	0	0.00
Total P	30	0.50
Total N	1000	0.50
Ortho P	15	0.50
Inorganic N	500	0.50

Model Options	Code	Description
Conservative Substance	0	NOT COMPUTED
Phosphorus Balance	7	SETTLING VELOCITY
Nitrogen Balance	0	NOT COMPUTED
Chlorophyll-a	4	P, LINEAR
Secchi Depth	1	VS. CHLA & TURBIDITY
Dispersion	1	FISCHER-NUMERIC
Phosphorus Calibration	1	DECAY RATES
Nitrogen Calibration	1	DECAY RATES
Error Analysis	1	MODEL & DATA
Availability Factors	0	IGNORE
Mass-Balance Tables	1	USE ESTIMATED CONCS
Output Destination	2	EXCEL WORKSHEET

Segment Morphometry

		Outflow		Area	Depth	Length	Mixed Depth (m)		Hypol Depth		Non-Algal Turb (m^{-1})		Internal Loads (mg/m2-day) Conserv.		Total P		Total N	
Seg	Name	Segment	Group	km^2	m	km	Mean	CV	Mean	CV	Mean	CV	Mean	CV	Mean	CV	Mean	CV
1	Cowley Lake	0	1	0.133	1.46	0.51	1.46	0	0	0	0.08	0	0	0	3.95	0	0	0

Segment Observed Water Quality

	Conserv		Total P (ppb)		Total N (ppb)		Chl-a (ppb)		Secchi (m)		Organic N (ppb)		TP - Ortho P (ppb)		HOD (ppb/day)		MOD (ppb/day)	
Seg	Mean	CV	Mean	CV	Mean	CV	Mean	CV	Mean	CV	Mean	CV	Mean	CV	Mean	CV	Mean	CV
1	0	0	533.6	0	3300	0	135.6	0	0.79	0	0	0	0	0	0	0	0	0

Segment Calibration Factors

	Dispersion Rate		Total P (ppb)		Total N (ppb)		Chl-a (ppb)		Secchi (m)		Organic N (ppb)		TP - Ortho P (ppb)		HOD (ppb/day)		MOD (ppb/day)	
Seg	Mean	CV	Mean	CV	Mean	CV	Mean	CV	Mean	CV	Mean	CV	Mean	CV	Mean	CV	Mean	CV
1	1	0	1	0	1	0	0.91	0	2.8	0	1	0	1	0	1	0	1	0

Tributary Data

Trib	Trib Name	Segment	Type	Dr Area km^2	Flow (hm^3/yr) Mean	CV	Conserv. Mean	CV	Total P (ppb) Mean	CV	Total N (ppb) Mean	CV	Ortho P (ppb) Mean	CV	Inorganic N (ppb) Mean	CV
1	Cowley-Direct	1	1	3.35	0.585	0	0	0	324.7	0	0.85	0	104.8	0	0	0

Model Coefficients	Mean	CV
Dispersion Rate	1.000	0.70
Total Phosphorus	1.000	0.45
Total Nitrogen	1.000	0.55
Chl-a Model	1.000	0.26
Secchi Model	1.000	0.10
Organic N Model	1.000	0.12
TP-OP Model	1.000	0.15
HODv Model	1.000	0.15
MODv Model	1.000	0.22
Secchi/Chla Slope (m^2/mg)	0.025	0.00
Minimum Qs (m/yr)	0.100	0.00
Chl-a Flushing Term	1.000	0.00
Chl-a Temporal CV	0.620	0
Avail. Factor - Total P	0.330	0
Avail. Factor - Ortho P	1.930	0
Avail. Factor - Total N	0.590	0
Avail. Factor - Inorganic N	0.790	0

Cowley Lake

File: \\admn-file-vm03\users$\101782\Documents\BATHTUB\Elm Creek\Cowley Lake\Cowley 2006 (8-19-2015).btb

Segment Mass Balance Based Upon Predicted Concentrations

Component: TOTAL P **Segment: 1 Cowley Lake**

Trib	Type	Location	Flow hm^3/yr	Flow %Total	Load kg/yr	Load %Total	Conc mg/m^3
1	1	Cowley-Direct	0.6	86.1%	189.9	49.2%	325
PRECIPITATION			0.1	13.9%	4.0	1.0%	42
INTERNAL LOAD			0.0	0.0%	191.9	49.7%	
TRIBUTARY INFLOW			0.6	86.1%	189.9	49.2%	325
***TOTAL INFLOW			0.7	100.0%	385.8	100.0%	568
ADVECTIVE OUTFLOW			0.6	86.3%	314.5	81.5%	536
***TOTAL OUTFLOW			0.6	86.3%	314.5	81.5%	536
***EVAPORATION			0.1	13.7%	0.0	0.0%	
***RETENTION			0.0	0.0%	71.3	18.5%	

Hyd. Residence Time =	0.3311	yrs
Overflow Rate =	4.4	m/yr
Mean Depth =	1.5	m

Cowley Lake

File: **\\admn-file-vm03\users$\101782\Documents\BATHTUB\Elm Creek\Cowley Lake\Cowley 2006 (8-19-2015).btb**

Predicted & Observed Values Ranked Against CE Model Development Dataset

Segment: **1 Cowley Lake**

	Predicted Values--->			Observed Values--->		
Variable	**Mean**	**CV**	**Rank**	**Mean**	**CV**	**Rank**
TOTAL P MG/M3	536.2	0.08	99.6%	533.6		99.6%
TOTAL N MG/M3	3300.0		96.9%	3300.0		96.9%
C.NUTRIENT MG/M3	235.8	0.02	99.1%	235.5		99.1%
CHL-A MG/M3	136.6	0.27	100.0%	135.6		100.0%
SECCHI M	0.8	0.28	34.7%	0.8		34.0%
ORGANIC N MG/M3	3278.3	0.29	100.0%			
TP-ORTHO-P MG/M3	241.0	0.31	98.6%			
ANTILOG PC-1	7482.9	0.38	99.5%	3917.4		98.3%
ANTILOG PC-2	30.9	0.09	99.9%	30.8		99.9%
(N - 150) / P	5.9	0.08	5.9%	5.9		6.0%
INORGANIC N / P	0.1	15.10	0.0%			
TURBIDITY 1/M	0.1		1.1%	0.1		1.1%
ZMIX * TURBIDITY	0.1		0.0%	0.1		0.0%
ZMIX / SECCHI	1.8	0.28	4.9%	1.8		5.2%
CHL-A * SECCHI	109.4	0.10	100.0%	107.1		100.0%
CHL-A / TOTAL P	0.3	0.26	66.0%	0.3		65.8%
FREQ(CHL-a>10) %	100.0	0.00	100.0%	100.0		100.0%
FREQ(CHL-a>20) %	99.7	0.00	100.0%	99.7		100.0%
FREQ(CHL-a>30) %	98.4	0.02	100.0%	98.3		100.0%
FREQ(CHL-a>40) %	95.3	0.04	100.0%	95.1		100.0%
FREQ(CHL-a>50) %	90.5	0.08	100.0%	90.3		100.0%
FREQ(CHL-a>60) %	84.6	0.12	100.0%	84.3		100.0%
CARLSON TSI-P	94.8	0.01	99.6%	94.7		99.6%
CARLSON TSI-CHLA	78.8	0.03	100.0%	78.8		100.0%
CARLSON TSI-SEC	63.2	0.06	65.3%	63.4		66.0%

Henry Lake

File: **\\admn-file-vm03\users$\101782\Documents\BATHTUB\Elm Creek\Henry Lake\Henry Lake 2009 & 2011 (8-19-2015).btb**

Description:

Model calibrated to the average water quality conditions for 2009 and 2011.
Loadings are the average flow and concentration for 2009 and 2011.

Global Variables	Mean	CV
Averaging Period (yrs)	1	0.0
Precipitation (m)	0.713	0.0
Evaporation (m)	0.7	0.0
Storage Increase (m)	0	0.0

Atmos. Loads (kg/km^2-yr	Mean	CV
Conserv. Substance	0	0.00
Total P	30	0.50
Total N	1000	0.50
Ortho P	15	0.50
Inorganic N	500	0.50

Model Options	Code	Description
Conservative Substance	0	NOT COMPUTED
Phosphorus Balance	3	2ND ORDER, FIXED
Nitrogen Balance	4	BACHMAN VOL. LOAD
Chlorophyll-a	4	P, LINEAR
Secchi Depth	1	VS. CHLA & TURBIDITY
Dispersion	1	FISCHER-NUMERIC
Phosphorus Calibration	1	DECAY RATES
Nitrogen Calibration	1	DECAY RATES
Error Analysis	1	MODEL & DATA
Availability Factors	0	IGNORE
Mass-Balance Tables	1	USE ESTIMATED CONCS
Output Destination	2	EXCEL WORKSHEET

Segment Morphometry

		Outflow		Area	Depth	Length	Mixed Depth (m)		Hypol Depth		Non-Algal Turb (m^{-1})		Internal Loads (mg/m2-day) Conserv.		Total P		Total N	
Seg	Name	Segment	Group	km^2	m	km	Mean	CV	Mean	CV	Mean	CV	Mean	CV	Mean	CV	Mean	CV
1	Henry Lake	0	1	0.19	0.863	0.363	0.86	0	0	0	0.47	0	0	0	1.757	0	0	0

Segment Observed Water Quality

	Conserv		Total P (ppb)		Total N (ppb)		Chl-a (ppb)		Secchi (m)		Organic N (ppb)		TP - Ortho P (ppb)		HOD (ppb/day)		MOD (ppb/day)	
Seg	Mean	CV	Mean	CV	Mean	CV	Mean	CV	Mean	CV	Mean	CV	Mean	CV	Mean	CV	Mean	CV
1	0	0	149.9	0	1800	0	38.4	0	0.7	0	0	0	0	0	0	0	0	0

Segment Calibration Factors

	Dispersion Rate		Total P (ppb)		Total N (ppb)		Chl-a (ppb)		Secchi (m)		Organic N (ppb)		TP - Ortho P (ppb)		HOD (ppb/day)		MOD (ppb/day)	
Seg	Mean	CV	Mean	CV	Mean	CV	Mean	CV	Mean	CV	Mean	CV	Mean	CV	Mean	CV	Mean	CV
1	1	0	1	0	0.727	0	0.91	0	1	0	1	0	1	0	1	0	1	0

Tributary Data

Trib	Trib Name	Segment	Type	Dr Area km^2	Flow (hm^3/yr) Mean	CV	Conserv. Mean	CV	Total P (ppb) Mean	CV	Total N (ppb) Mean	CV	Ortho P (ppb) Mean	CV	Inorganic N (ppb) Mean	CV
1	Henry-Direct	1	1	3.28	0.486	0	0	0	645	0	3000	0	208	0	0	0

Model Coefficients	Mean	CV
Dispersion Rate	1.000	0.70
Total Phosphorus	1.000	0.45
Total Nitrogen	1.000	0.55
Chl-a Model	1.000	0.26
Secchi Model	1.000	0.10
Organic N Model	1.000	0.12
TP-OP Model	1.000	0.15
HODv Model	1.000	0.15
MODv Model	1.000	0.22
Secchi/Chla Slope (m^2/mg)	0.025	0.00
Minimum Qs (m/yr)	0.100	0.00
Chl-a Flushing Term	1.000	0.00
Chl-a Temporal CV	0.620	0
Avail. Factor - Total P	0.330	0
Avail. Factor - Ortho P	1.930	0
Avail. Factor - Total N	0.590	0
Avail. Factor - Inorganic N	0.790	0

Henry Lake

File: \\admn-file-vm03\users$\101782\Documents\BATHTUB\Elm Creek\Henry Lake\Henry Lake 2009 & 2011 (8-19-2015).btb

Segment Mass Balance Based Upon Predicted Concentrations

Component: TOTAL P **Segment: 1 Henry Lake**

Trib	Type	Location	Flow hm^3/yr	Flow %Total	Load kg/yr	Load %Total	Conc mg/m^3
1	1	Henry-Direct	0.5	78.2%	313.5	71.1%	645
PRECIPITATION			0.1	21.8%	5.7	1.3%	42
INTERNAL LOAD			0.0	0.0%	121.9	27.6%	
TRIBUTARY INFLOW			0.5	78.2%	313.5	71.1%	645
***TOTAL INFLOW			0.6	100.0%	441.1	100.0%	710
ADVECTIVE OUTFLOW			0.5	78.6%	73.2	16.6%	150
***TOTAL OUTFLOW			0.5	78.6%	73.2	16.6%	150
***EVAPORATION			0.1	21.4%	0.0	0.0%	
***RETENTION			0.0	0.0%	367.9	83.4%	

Hyd. Residence Time =	0.3357	yrs
Overflow Rate =	2.6	m/yr
Mean Depth =	0.9	m

Component: TOTAL N **Segment: 1 Henry Lake**

Trib	Type	Location	Flow hm^3/yr	Flow %Total	Load kg/yr	Load %Total	Conc mg/m^3
1	1	Henry-Direct	0.5	78.2%	1458.0	88.5%	3000
PRECIPITATION			0.1	21.8%	190.0	11.5%	1403
TRIBUTARY INFLOW			0.5	78.2%	1458.0	88.5%	3000
***TOTAL INFLOW			0.6	100.0%	1648.0	100.0%	2652
ADVECTIVE OUTFLOW			0.5	78.6%	871.2	52.9%	1784
***TOTAL OUTFLOW			0.5	78.6%	871.2	52.9%	1784
***EVAPORATION			0.1	21.4%	0.0	0.0%	
***RETENTION			0.0	0.0%	776.8	47.1%	

Hyd. Residence Time =	0.3357	yrs
Overflow Rate =	2.6	m/yr
Mean Depth =	0.9	m

Henry Lake

File: \\admn-file-vm03\users$\101782\Documents\BATHTUB\Elm Creek\Henry Lake\Henry Lake 2009 & 2011 (8-19-2015).btb

Predicted & Observed Values Ranked Against CE Model Development Dataset

Segment: 1 Henry Lake

	Predicted Values--->			Observed Values--->		
Variable	**Mean**	**CV**	**Rank**	**Mean**	**CV**	**Rank**
TOTAL P MG/M3	149.8	0.20	89.7%	149.9		89.8%
TOTAL N MG/M3	1783.6	0.26	81.6%	1800.0		82.0%
C.NUTRIENT MG/M3	100.7	0.18	90.3%	101.3		90.4%
CHL-A MG/M3	38.2	0.33	96.6%	38.4		96.6%
SECCHI M	0.7	0.24	28.6%	0.7		28.4%
ORGANIC N MG/M3	1062.6	0.29	94.3%			
TP-ORTHO-P MG/M3	75.0	0.33	83.3%			
ANTILOG PC-1	1597.4	0.43	92.4%	1324.2		90.1%
ANTILOG PC-2	11.6	0.13	87.0%	12.0		88.2%
(N - 150) / P	10.9	0.35	25.7%	11.0		26.2%
INORGANIC N / P	9.6	0.83	12.9%			
TURBIDITY 1/M	0.5		38.4%	0.5		38.4%
ZMIX * TURBIDITY	0.4		0.4%	0.4		0.4%
ZMIX / SECCHI	1.2	0.24	1.0%	1.2		1.0%
CHL-A * SECCHI	26.8	0.15	91.4%	26.9		91.4%
CHL-A / TOTAL P	0.3	0.26	66.0%	0.3		66.3%
FREQ(CHL-a>10) %	96.8	0.04	96.6%	96.9		96.6%
FREQ(CHL-a>20) %	76.8	0.21	96.6%	77.1		96.6%
FREQ(CHL-a>30) %	53.1	0.39	96.6%	53.5		96.6%
FREQ(CHL-a>40) %	35.0	0.56	96.6%	35.3		96.6%
FREQ(CHL-a>50) %	22.8	0.70	96.6%	23.1		96.6%
FREQ(CHL-a>60) %	14.9	0.83	96.6%	15.2		96.6%
CARLSON TSI-P	76.4	0.04	89.7%	76.4		89.8%
CARLSON TSI-CHLA	66.3	0.05	96.6%	66.4		96.6%
CARLSON TSI-SEC	65.1	0.05	71.4%	65.1		71.6%

Sylvan Lake
File: **\\admn-file-vm03\users$\101782\Documents\BATHTUB\Elm Creek\Sylvan\Sylvan Lake 9-10-2015.btb**
Description:
Model is calibrated to 2012 conditions.

Global Variables	Mean	CV
Averaging Period (yrs)	1	0.0
Precipitation (m)	0.7112	0.0
Evaporation (m)	0.7	0.0
Storage Increase (m)	0	0.0

Atmos. Loads (kg/km^2-yr	Mean	CV
Conserv. Substance	0	0.00
Total P	30	0.50
Total N	1000	0.50
Ortho P	15	0.50
Inorganic N	500	0.50

Model Options	Code	Description
Conservative Substance	0	NOT COMPUTED
Phosphorus Balance	6	FIRST ORDER
Nitrogen Balance	5	BACHMAN FLUSHING
Chlorophyll-a	1	P, N, LIGHT, T
Secchi Depth	1	VS. CHLA & TURBIDITY
Dispersion	1	FISCHER-NUMERIC
Phosphorus Calibration	1	DECAY RATES
Nitrogen Calibration	1	DECAY RATES
Error Analysis	1	MODEL & DATA
Availability Factors	0	IGNORE
Mass-Balance Tables	1	USE ESTIMATED CONCS
Output Destination	2	EXCEL WORKSHEET

Segment Morphometry

		Outflow		Area	Depth	Length	Mixed Depth (m)		Hypol Depth		Non-Algal Turb (m^{-1})		Internal Loads (mg/m2-day) Conserv.		Total P		Total N	
Seg	Name	Segment	Group	km^2	m	km	Mean	CV	Mean	CV	Mean	CV	Mean	CV	Mean	CV	Mean	CV
1	Sylvan Lake	0	1	0.599	2.15	1.07	2.15	0	0	0	1.38	0	0	0	1.8185	0	0	0

Segment Observed Water Quality

	Conserv		Total P (ppb)		Total N (ppb)		Chl-a (ppb)		Secchi (m)		Organic N (ppb)		TP - Ortho P (ppb)		HOD (ppb/day)		MOD (ppb/day)	
Seg	Mean	CV	Mean	CV	Mean	CV	Mean	CV	Mean	CV	Mean	CV	Mean	CV	Mean	CV	Mean	CV
1	0	0	353.4	0	3356	0	69.8	0	0.32	0	0	0	0	0	0	0	0	0

Segment Calibration Factors

	Dispersion Rate		Total P (ppb)		Total N (ppb)		Chl-a (ppb)		Secchi (m)		Organic N (ppb)		TP - Ortho P (ppb)		HOD (ppb/day)		MOD (ppb/day)	
Seg	Mean	CV	Mean	CV	Mean	CV	Mean	CV	Mean	CV	Mean	CV	Mean	CV	Mean	CV	Mean	CV
1	1	0	1	0	1.14	0	1.088	0	1	0	1	0	1	0	1	0	1	0

Tributary Data

Trib	Trib Name	Segment	Type	Dr Area km^2	Flow (hm^3/yr) Mean	CV	Conserv. Mean	CV	Total P (ppb) Mean	CV	Total N (ppb) Mean	CV	Ortho P (ppb) Mean	CV	Inorganic N (ppb) Mean	CV
1	Sylvan-Direct	1	1	1.3	0.249391	0	0	0	520.54	0	6660	0	180.11	0	0	0

Model Coefficients	Mean	CV
Dispersion Rate	1.000	0.70
Total Phosphorus	1.000	0.45
Total Nitrogen	1.000	0.55
Chl-a Model	1.000	0.26
Secchi Model	1.000	0.10
Organic N Model	1.000	0.12
TP-OP Model	1.000	0.15
HODv Model	1.000	0.15
MODv Model	1.000	0.22
Secchi/Chla Slope (m^2/mg)	0.025	0.00
Minimum Qs (m/yr)	0.100	0.00
Chl-a Flushing Term	1.000	0.00
Chl-a Temporal CV	0.620	0
Avail. Factor - Total P	0.330	0
Avail. Factor - Ortho P	1.930	0
Avail. Factor - Total N	0.590	0
Avail. Factor - Inorganic N	0.790	0

Sylvan Lake
File: \\admn-file-vm03\users$\101782\Documents\BATHTUB\Elm Creek\Sylvan\Sylvan Lake 9-10-2015.btb

Segment Mass Balance Based Upon Predicted Concentrations

Component: TOTAL P **Segment: 1 Sylvan Lake**

Trib	Type	Location	Flow hm^3/yr	Flow %Total	Load kg/yr	Load %Total	Conc mg/m^3
1	1	Sylvan-Direct	0.2	36.9%	129.8	23.8%	521
PRECIPITATION			0.4	63.1%	18.0	3.3%	42
INTERNAL LOAD			0.0	0.0%	397.9	72.9%	
TRIBUTARY INFLOW			0.2	36.9%	129.8	23.8%	521
***TOTAL INFLOW			0.7	100.0%	545.6	100.0%	808
ADVECTIVE OUTFLOW			0.3	37.9%	90.5	16.6%	353
***TOTAL OUTFLOW			0.3	37.9%	90.5	16.6%	353
***EVAPORATION			0.4	62.1%	0.0	0.0%	
***RETENTION			0.0	0.0%	455.1	83.4%	

Hyd. Residence Time = 5.0287 yrs
Overflow Rate = 0.4 m/yr
Mean Depth = 2.2 m

Component: TOTAL N **Segment: 1 Sylvan Lake**

Trib	Type	Location	Flow hm^3/yr	Flow %Total	Load kg/yr	Load %Total	Conc mg/m^3
1	1	Sylvan-Direct	0.2	36.9%	1660.9	73.5%	6660
PRECIPITATION			0.4	63.1%	599.0	26.5%	1406
TRIBUTARY INFLOW			0.2	36.9%	1660.9	73.5%	6660
***TOTAL INFLOW			0.7	100.0%	2259.9	100.0%	3346
ADVECTIVE OUTFLOW			0.3	37.9%	857.9	38.0%	3350
***TOTAL OUTFLOW			0.3	37.9%	857.9	38.0%	3350
***EVAPORATION			0.4	62.1%	0.0	0.0%	
***RETENTION			0.0	0.0%	1402.0	62.0%	

Hyd. Residence Time = 5.0287 yrs
Overflow Rate = 0.4 m/yr
Mean Depth = 2.2 m

Sylvan Lake

File: \\admn-file-vm03\users$\101782\Documents\BATHTUB\Elm Creek\Sylvan\Sylvan Lake 9-10-2015.btb

Predicted & Observed Values Ranked Against CE Model Development Dataset

Segment: 1 Sylvan Lake

	Predicted Values--->			Observed Values--->		
Variable	**Mean**	**CV**	**Rank**	**Mean**	**CV**	**Rank**
TOTAL P MG/M3	353.4	0.37	98.7%	353.4		98.7%
TOTAL N MG/M3	3350.0	0.36	97.0%	3356.0		97.1%
C.NUTRIENT MG/M3	212.9	0.28	98.7%	213.1		98.7%
CHL-A MG/M3	69.6	0.28	99.5%	69.8		99.5%
SECCHI M	0.3	0.19	5.5%	0.3		5.5%
ORGANIC N MG/M3	1848.9	0.27	99.6%			
TP-ORTHO-P MG/M3	152.6	0.28	95.7%			
ANTILOG PC-1	6100.9	0.42	99.3%	4842.7		98.9%
ANTILOG PC-2	9.7	0.14	78.4%	9.7		78.6%
(N - 150) / P	9.1	0.53	17.7%	9.1		17.8%
INORGANIC N / P	7.5	1.05	8.3%			
TURBIDITY 1/M	1.4		82.4%	1.4		82.4%
ZMIX * TURBIDITY	3.0		46.9%	3.0		46.9%
ZMIX / SECCHI	6.7	0.19	72.1%	6.7		72.2%
CHL-A * SECCHI	22.3	0.16	86.6%	22.3		86.6%
CHL-A / TOTAL P	0.2	0.42	50.3%	0.2		50.5%
FREQ(CHL-a>10) %	99.8	0.00	99.5%	99.8		99.5%
FREQ(CHL-a>20) %	95.6	0.04	99.5%	95.6		99.5%
FREQ(CHL-a>30) %	85.3	0.12	99.5%	85.4		99.5%
FREQ(CHL-a>40) %	72.1	0.21	99.5%	72.2		99.5%
FREQ(CHL-a>50) %	58.9	0.30	99.5%	59.0		99.5%
FREQ(CHL-a>60) %	47.2	0.38	99.5%	47.4		99.5%
CARLSON TSI-P	88.8	0.06	98.7%	88.8		98.7%
CARLSON TSI-CHLA	72.2	0.04	99.5%	72.2		99.5%
CARLSON TSI-SEC	76.4	0.04	94.5%	76.4		94.5%

Goose Lake

File: **\\admn-file-vm03\users$\101782\Documents\BATHTUB\Elm Creek\Goose Lake\Goose Lake with TN 9-8-2014.btb**

Description:

Goose Lake Bathtub model
P8 Model Tributary Load
Average from 2010-2012

Global Variables	Mean	CV
Averaging Period (yrs)	1	0.0
Precipitation (m)	0.7112	0.2
Evaporation (m)	0.7	0.3
Storage Increase (m)	0	0.0

Atmos. Loads (kg/km^2-yr	Mean	CV
Conserv. Substance	0	0.00
Total P	30	0.50
Total N	1000	0.50
Ortho P	15	0.50
Inorganic N	500	0.50

Model Options	Code	Description
Conservative Substance	0	NOT COMPUTED
Phosphorus Balance	2	2ND ORDER, DECAY
Nitrogen Balance	6	FIRST ORDER
Chlorophyll-a	3	P, N, LOW-TURBIDITY
Secchi Depth	1	VS. CHLA & TURBIDITY
Dispersion	1	FISCHER-NUMERIC
Phosphorus Calibration	1	DECAY RATES
Nitrogen Calibration	1	DECAY RATES
Error Analysis	1	MODEL & DATA
Availability Factors	0	IGNORE
Mass-Balance Tables	1	USE ESTIMATED CONCS
Output Destination	2	EXCEL WORKSHEET

Segment Morphometry

		Outflow		Area	Depth	Length	Mixed Depth (m)		Hypol Depth		Non-Algal Turb (m^{-1})		Internal Loads (mg/m2-day) Conserv.		Total P		Total N	
Seg	Name	Segment	Group	km^2	m	km	Mean	CV	Mean	CV	Mean	CV	Mean	CV	Mean	CV	Mean	CV
1	Goose Lake	0	1	0.26	1.29	0.84	1.29	0.12	0	0	0.08	0.2	0	0	0.34	0	1.365	0

Segment Observed Water Quality

	Conserv		Total P (ppb)		Total N (ppb)		Chl-a (ppb)		Secchi (m)		Organic N (ppb)		TP - Ortho P (ppb)		HOD (ppb/day)		MOD (ppb/day)	
Seg	Mean	CV	Mean	CV	Mean	CV	Mean	CV	Mean	CV	Mean	CV	Mean	CV	Mean	CV	Mean	CV
1	0	0	180.6	0	3600	0	114.5	0	0.3	0	0	0	0	0	0	0	0	0

Segment Calibration Factors

	Dispersion Rate		Total P (ppb)		Total N (ppb)		Chl-a (ppb)		Secchi (m)		Organic N (ppb)		TP - Ortho P (ppb)		HOD (ppb/day)		MOD (ppb/day)	
Seg	Mean	CV	Mean	CV	Mean	CV	Mean	CV	Mean	CV	Mean	CV	Mean	CV	Mean	CV	Mean	CV
1	1	0	1	0	1	0	1.07	0	1	0	1	0	1	0	1	0	1	0

Tributary Data

Trib	Trib Name	Segment	Type	Dr Area km^2	Flow (hm^3/yr) Mean	CV	Conserv. Mean	CV	Total P (ppb) Mean	CV	Total N (ppb) Mean	CV	Ortho P (ppb) Mean	CV	Inorganic N (ppb) Mean	CV
1	8T-1.1 Pipe	1	1	0.0119	0.0036	0.1	0	0	300	0.2	1390	0	99	0	0	0
2	8T-4.2 Pipe	1	1	0.0126	0.0016	0.1	0	0	273.5	0.2	1280	0	99	0	0	0
3	8T-3P	1	1	0.109	0.0061	0.1	0	0	86.6	0.2	520	0	84.2	0	0	0
4	8T-1P	1	1	0.301	0.077	0	0	0	104.2	0	620	0	99	0	0	0
5	8T-4P	1	1	0.055	0.0098	0	0	0	100.8	0	606	0	99	0	0	0
6	Goose Direct	1	1	0.465	0.037	0	0	0	250.5	0	1170	0	99	0	0	0

Model Coefficients	Mean	CV
Dispersion Rate	1.000	0.70
Total Phosphorus	1.000	0.45
Total Nitrogen	1.000	0.55
Chl-a Model	1.000	0.26
Secchi Model	1.000	0.10
Organic N Model	1.000	0.12
TP-OP Model	1.000	0.15
HODv Model	1.000	0.15
MODv Model	1.000	0.22
Secchi/Chla Slope (m^2/mg)	0.025	0.00
Minimum Qs (m/yr)	0.100	0.00
Chl-a Flushing Term	1.000	0.00
Chl-a Temporal CV	0.620	0
Avail. Factor - Total P	0.330	0
Avail. Factor - Ortho P	1.930	0
Avail. Factor - Total N	0.590	0
Avail. Factor - Inorganic N	0.790	0

Goose Lake

File: \\admn-file-vm03\users$\101782\Documents\BATHTUB\Elm Creek\Goose Lake\Goose Lake with TN 9-8-2014.btb

Segment Mass Balance Based Upon Predicted Concentrations

Component: TOTAL P **Segment: 1 Goose Lake**

Trib	Type	Location	Flow hm^3/yr	Flow %Total	Load kg/yr	Load %Total	Conc mg/m^3
1	1	8T-1.1 Pipe	0.0	1.1%	1.1	1.8%	300
2	1	8T-4.2 Pipe	0.0	0.5%	0.4	0.7%	274
3	1	8T-3P	0.0	1.9%	0.5	0.9%	87
4	1	8T-1P	0.1	24.1%	8.0	13.3%	104
5	1	8T-4P	0.0	3.1%	1.0	1.6%	101
6	1	Goose Direct	0.0	11.6%	9.3	15.3%	251
PRECIPITATION			0.2	57.8%	7.8	12.9%	42
INTERNAL LOAD			0.0	0.0%	32.3	53.4%	
TRIBUTARY INFLOW			0.1	42.2%	20.3	33.6%	150
***TOTAL INFLOW			0.3	100.0%	60.4	100.0%	189
ADVECTIVE OUTFLOW			0.1	43.1%	24.8	41.1%	180
***TOTAL OUTFLOW			0.1	43.1%	24.8	41.1%	180
***EVAPORATION			0.2	56.9%	0.0	0.0%	
***RETENTION			0.0	0.0%	35.6	58.9%	

Hyd. Residence Time =	2.4302	yrs
Overflow Rate =	0.5	m/yr
Mean Depth =	1.3	m

Component: TOTAL N **Segment: 1 Goose Lake**

Trib	Type	Location	Flow hm^3/yr	Flow %Total	Load kg/yr	Load %Total	Conc mg/m^3
1	1	8T-1.1 Pipe	0.0	1.1%	5.0	1.0%	1390
2	1	8T-4.2 Pipe	0.0	0.5%	2.0	0.4%	1280
3	1	8T-3P	0.0	1.9%	3.2	0.6%	520
4	1	8T-1P	0.1	24.1%	47.7	9.6%	620
5	1	8T-4P	0.0	3.1%	5.9	1.2%	606
6	1	Goose Direct	0.0	11.6%	43.3	8.7%	1170
PRECIPITATION			0.2	57.8%	260.0	52.3%	1406
INTERNAL LOAD			0.0	0.0%	129.6	26.1%	
TRIBUTARY INFLOW			0.1	42.2%	107.2	21.6%	793
***TOTAL INFLOW			0.3	100.0%	496.8	100.0%	1553
ADVECTIVE OUTFLOW			0.1	43.1%	496.8	100.0%	3600
***TOTAL OUTFLOW			0.1	43.1%	496.8	100.0%	3600
***EVAPORATION			0.2	56.9%	0.0	0.0%	
***RETENTION			0.0	0.0%	0.0	0.0%	

Hyd. Residence Time =	2.4302	yrs
Overflow Rate =	0.5	m/yr
Mean Depth =	1.3	m

Goose Lake

File: **\\admn-file-vm03\users$\101782\Documents\BATHTUB\Elm Creek\Goose Lake\Goose Lake with TN 9-8-2014.btb**

Predicted & Observed Values Ranked Against CE Model Development Dataset

Segment: **1 Goose Lake**

	Predicted Values--->			Observed Values--->		
Variable	**Mean**	**CV**	**Rank**	**Mean**	**CV**	**Rank**
TOTAL P MG/M3	179.7	0.34	92.9%	180.6		93.0%
TOTAL N MG/M3	3599.8	0.55	97.7%	3600.0		97.7%
C.NUTRIENT MG/M3	152.4	0.38	96.5%	152.9		96.6%
CHL-A MG/M3	114.6	0.55	99.9%	114.5		99.9%
SECCHI M	0.3	0.53	6.4%	0.3		4.6%
ORGANIC N MG/M3	2775.2	0.53	100.0%			
TP-ORTHO-P MG/M3	201.7	0.57	97.8%			
ANTILOG PC-1	7443.9	0.95	99.5%	8226.2		99.6%
ANTILOG PC-2	16.3	0.08	96.1%	12.9		90.8%
(N - 150) / P	19.2	0.38	57.1%	19.1		56.8%
INORGANIC N / P	824.6	1.51	100.0%			
TURBIDITY 1/M	0.1	0.20	1.1%	0.1	0.20	1.1%
ZMIX * TURBIDITY	0.1	0.23	0.0%	0.1	0.23	0.0%
ZMIX / SECCHI	3.8	0.55	34.8%	4.3	0.12	42.9%
CHL-A * SECCHI	38.9	0.10	97.1%	34.4		95.7%
CHL-A / TOTAL P	0.6	0.31	96.8%	0.6		96.8%
FREQ(CHL-a>10) %	100.0	0.00	99.9%	100.0		99.9%
FREQ(CHL-a>20) %	99.4	0.01	99.9%	99.4		99.9%
FREQ(CHL-a>30) %	96.8	0.06	99.9%	96.8		99.9%
FREQ(CHL-a>40) %	91.7	0.14	99.9%	91.7		99.9%
FREQ(CHL-a>50) %	84.8	0.24	99.9%	84.8		99.9%
FREQ(CHL-a>60) %	76.8	0.34	99.9%	76.8		99.9%
CARLSON TSI-P	79.0	0.06	92.9%	79.1		93.0%
CARLSON TSI-CHLA	77.1	0.07	99.9%	77.1		99.9%
CARLSON TSI-SEC	75.6	0.10	93.6%	77.3		95.4%

LimnoTech
Water Environment | Scientists Engineers

501 Avis Drive
Ann Arbor, MI 48108
734.332.1200
www.limno.com

Memorandum

From: Pranesh Selvendiran, Chelsie Boles, Todd Redder and Hans Holmberg

Date: October 17, 2014

CC: Brian Vlach (TRPD)
Amy Timm (TRPD)

To: Rich Brasch (TRPD)

Project: Elm Creek Watershed SWAT Modeling

Subject: Development, calibration and confirmation of the Elm Creek Watershed SWAT model

Statement of Purpose

This memorandum has been prepared for the Three Rivers Park District (TRPD) to document Tasks 1 – 2 as outlined in the Elm Creek Watershed Scope of Work. The purpose of Task 1 is to acquire data and complete development of a Soil and Water Assessment Tool (SWAT) model for the Elm Creek Watershed. The purpose of Task 2 is to perform calibration and confirmation of the Elm Creek Watershed SWAT model (ECWSWAT). The calibration components include hydrology, sediments and nutrients, including total nitrogen and total phosphorus. The purpose of this memorandum is to describe data sources and model set-up, and to document the results of the ECWSWAT model calibration and confirmation.

Project Background

The Minnesota Pollution Control Agency (MPCA) is intending to develop a watershed-wide, multi-parameter Total Maximum Daily Load (TMDL) Protection Plan and Implementation Plan that will collectively address all water quality impairments throughout the Elm Creek watershed. To support the TMDL development, a suite of modeling tools has been identified for the assessment of landscape and instream/in-lake processes. The SWAT model was chosen as one of the modeling tools to simulate watershed hydrology and water quality to in the Elm Creek watershed. TRPD's intended use of the SWAT model was to primarily quantify landscape contributions of water, sediment and nutrients in the Elm Creek Watershed. Landscape loads from SWAT model will be utilized as an input to other modeling tools (e.g., AQUATOX and BATHTUB) to support the simulation of in-stream/in-lake processes in the Elm Creek Watershed. LimnoTech was contracted by TRPD for the development and calibration of a SWAT model for the Elm Creek Watershed.

The scope of work was organized into two major tasks:

- Task 1: Data acquisition and model set-up; and
- Task 2: Model calibration and confirmation for hydrology, sediment and nutrients, including total nitrogen and total phosphorus

The results of Tasks 1 and 2 are documented in this memorandum.

Watershed Characteristics

The Elm Creek Watershed (Figure 1), which is located in the Metropolitan region of Minnesota, is part of the Mississippi River-Twin Cities watershed (8-digit HUC: 07010206). The Elm Creek Watershed lies wholly within the north central part of Hennepin County. The Crow and Mississippi Rivers demarcate the northern boundary. Within the legal boundaries of the Elm Creek Watershed, some portions of the areas in the north drain to the Crow and Mississippi Rivers (ECWMC, 2003).

The Elm Creek hydrologic watershed has a surface area of approximately 66,400 acres, and it drains land from the following municipalities: Champlin, Corcoran, Dayton, Maple Grove, Medina, Plymouth and Rogers. Land use throughout the watershed is highly variable and ranges from rural (predominantly row crop agricultural) to high density urban and commercial development. The watershed includes three major stream systems (Elm, Rush, and Diamond Creeks) that total over 41 stream miles. Major lake systems within the watershed include French, Diamond, Rice, Fish, Weaver, Henry, Goose, Mud Lakes and the Mill Pond.

The climate of the Elm Creek Watershed is characterized by wide variations in temperature, ample rainfall, and moderate snowfall. The average annual precipitation is approximately 27 inches. The average annual temperature is 44 degrees Fahrenheit, with the extremes ranging from 112 to –37 degrees Fahrenheit. Topography varies from nearly level to gently and moderately sloping. The highest elevations in the area rise to elevations of approximately 1,030-1,050 feet near Rogers, in southern Corcoran, and in Medina. The lowest elevations of approximately 840-850 feet are located near the northern border of the watershed near the Crow and Mississippi Rivers. Land use within the Elm Creek Watershed has been influenced by agricultural activities and rural residential and higher density development pressure. The Elm Creek Watershed has many natural areas, water resources, and local parks that provide recreational value and habitat for fish and wildlife.

Hydrology in the watershed is influenced by wetland complexes, several large depressions, and the stream network. Water is generally directed from the south and west to the northeast via four main stream networks: Rush Creek, South Fork Rush Creek, Diamond Creek, and Elm Creek. These stream networks converge in the Elm Creek Regional Park and enter Hayden Lake. Water is eventually discharged to the Mississippi River just downstream of the Mill Pond in Champlin.

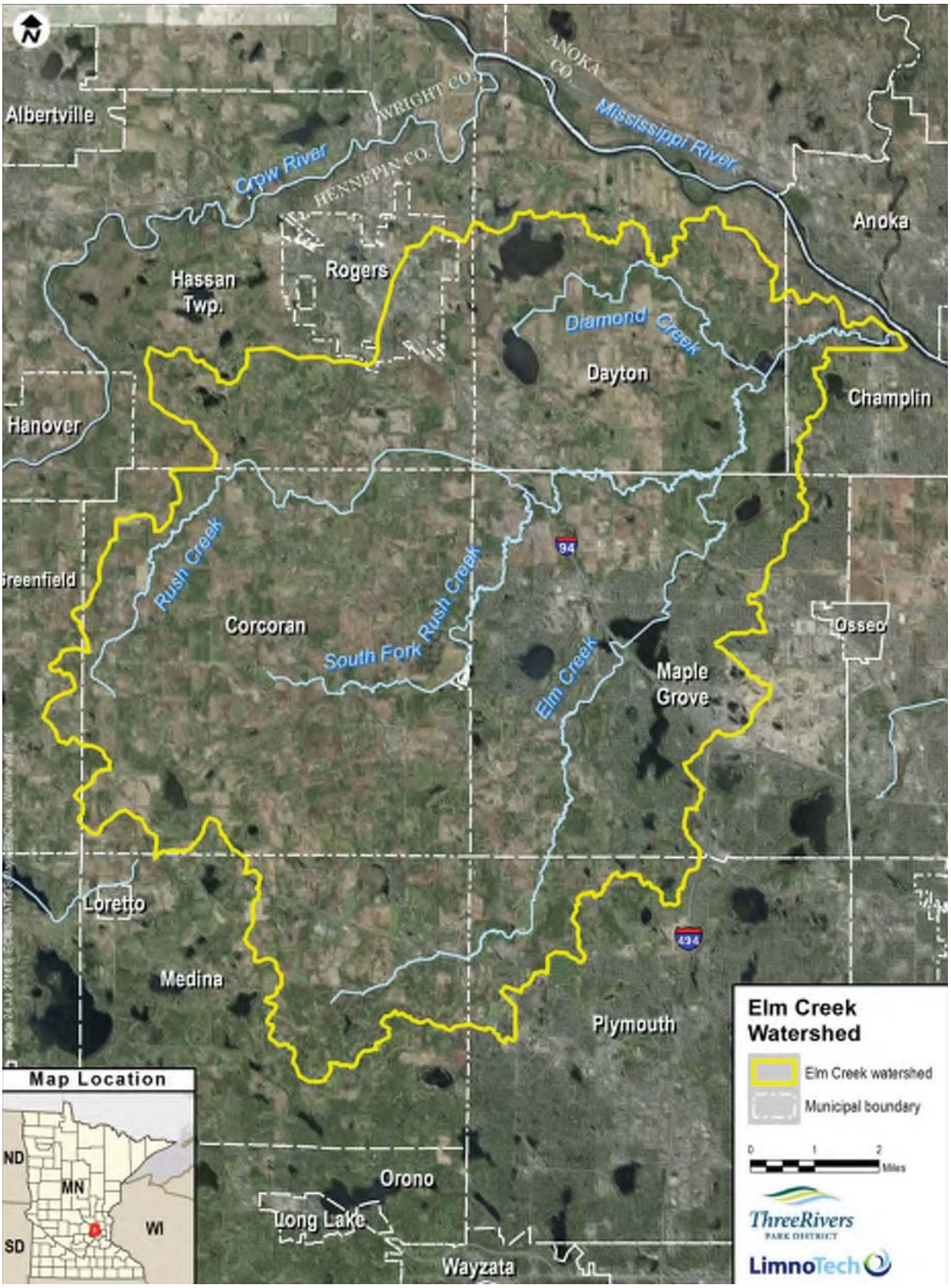

Figure 1. Map of the Elm Creek Watershed

Overview of the Soil and Water Assessment Tool (SWAT)

SWAT is a watershed scale continuous simulation model that operates on a daily time step. SWAT simulates environmental processes in watersheds and receiving waters. The general features of SWAT include simulation of watershed hydrology, sediment loading, nutrient loading, and reach routing. Important features include the simulation of return flow (baseflow or volume of streamflow from groundwater), ponds/reservoirs/wetlands, point sources, channel erosion, crop growth and irrigation, tile drains, rural and agricultural management practices, and the calculation of sediment and nutrient loadings from urban areas. Agency support for SWAT is provided by the United States Department of Agriculture.

SWAT can be applied to watersheds that range from very small watersheds with areas of a few square miles to large, complex watersheds with areas greater than several thousand square miles. The conceptual construct of SWAT is based on a watershed that is divided into multiple subwatersheds or subbasins, which are then further subdivided into hydrologic response units (HRUs) that are homogeneous in land use, soil characteristics, and land management practices. Specifically, individual fields with the same type of land use, soil, and suite of land management practices scattered throughout a subbasin are lumped together and combined to form a single HRU (Neitsch et al. 2011). Each HRU represents a portion of a subbasin area that is not spatially explicit within the subbasin; however, an individual subbasin is spatially explicit and possesses a specific geographic location within the overall watershed representation in SWAT. A subbasin will contain at least one (1) HRU, a tributary channel (i.e., a “virtual” tributary channel associated with an HRU where lagging takes place prior to delivery to the main reach) and a main channel or reach. Surface runoff and, sediment and nutrients loads are generated at the HRU level, aggregated to the subbasin levels, and routed through the river network to the watershed outlet.

Simulation of watershed hydrology is separated into the land and the routing phase of the hydrological cycle. Sediment yields are estimated with the Modified Universal Soil Loss Equation (MUSLE) (Williams 1975). SWAT simulates both N and P cycles, which are associated with simulated management practices. Both nutrients are divided in the soil into two parts, each associated with organic and inorganic N and P transport and transformations. Agricultural management practices such as planting, harvesting, tillage implement, irrigation, grazing and nutrient applications can be simulated for each cropping system with specific dates and by explicitly defining the appropriate management parameters for each HRU (e.g. tillage depth, N and P fractions in fertilizer, quantity of fertilizer, manure types, etc.). A detailed description of SWAT capabilities are provided in Nietsch et al. (2011).

Elm Creek Watershed SWAT Model Development

In the SWAT model, the watershed is divided into 77 subbasins (Figure 2), with an average area per subbasin of 852 acres. The subbasins are further divided into HRUs to represent unique land use/cover conditions and soil and slope characteristics within the subbasins. The model contains a total of 948 HRUs, and the average area per HRU is 69.2 acres. The total watershed drainage area represented by the model is 67,437 acres.

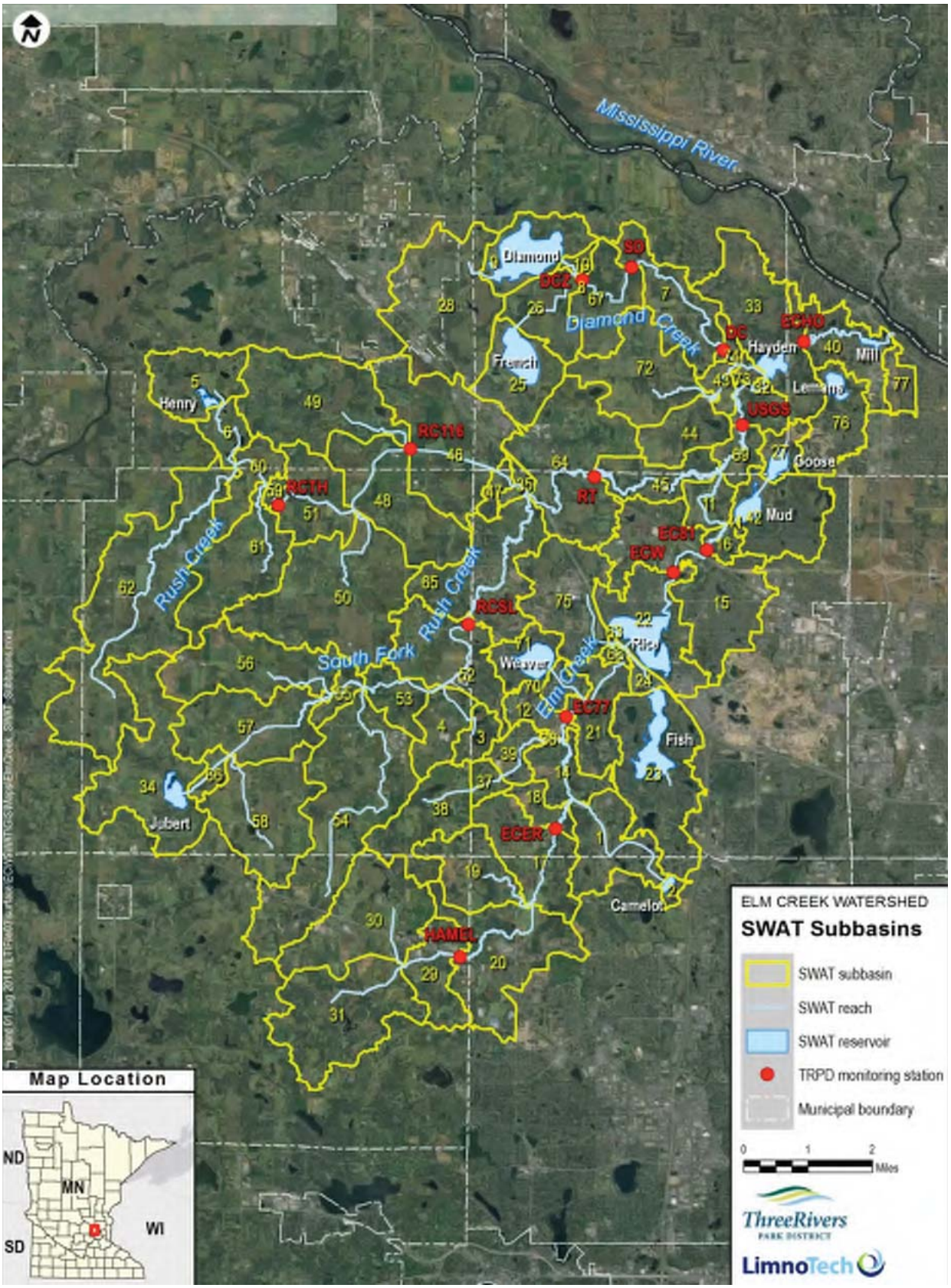

Figure 2. Map of the Elm Creek Watershed SWAT subbasins and stream network

The drainage system within the Elm Creek watershed includes lakes, upland depressions and flow-through riparian depressions (i.e., ponds and wetlands). These hydrologic features were represented to the extent possible by utilizing the following built-in capabilities with SWAT: reservoirs, wetlands and "WATR" (water) HRUs.

Water bodies that are located on the stream network and are large enough to affect the flow at the daily timescale are modeled using the "reservoir" option in SWAT. A total of 13 water bodies within the Elm Creek watershed are explicitly represented as reservoirs (Figure 2; Table 1). Reservoirs receive water contributed to the channel network from all upstream subbasins. The water balance for reservoirs includes inflow, outflow, rainfall on the surface, evaporation, and seepage from the bottom of the reservoir into underlying soils.

Table 1. Reservoirs represented in the ECWSWAT model

Subbasin	Reservoir	Area (acres)	Source
2	Camelot Lake	22	MDNR*
5	Henry Lake	32	MDNR*
9	Diamond Lake	397.0	TRPD
22	Rice Lake	339	TRPD
23	Fish Lake	232	TRPD
25	French Lake	215	TRPD
27	Goose Lake	78	TRPD
33	Hayden Lake	90	MDNR*
34	Jubert Lake	64	MDNR*
40	Mill Pond	29	TRPD
42	Mud Lake	148.3	TRPD
71	Weaver Lake	153	TRPD
76	Lehman Lake	43	TRPD

*Minnesota Department of Natural Resources (MDNR) Lake Finder database. http://www.dnr.state.mn.us/lakefind/index.html

The "wetland" option in SWAT is used to represent: 1) detention ponds in urban areas documented by municipal surface water management plans (SWMPs), and 2) in-channel shallow wetlands. Water flowing into these waterbodies only originates from subbasins in which they are located, based on the representation available in SWAT. Only one wetland segment can be represented per subbasin in SWAT. Therefore, multiple detention ponds or in-channel wetlands are represented as a single "wetland" within a subbasin.

To configure the wetlands, subbasins were first categorized into "urban", "rural" or "urban/rural" (TRPD, personnel comm.). In each urban subbasin, the total SWMP detention pond acreage is represented as wetland area. Information regarding SWMP detention ponds was obtained by TRPD from the respective municipal administration. In each rural subbasin, the total in-channel wetland acreage is represented as wetlands. In-channel wetland areas were identified using the National Wetland Inventory (NWI) spatial layer (Source: TRPD). In urban/rural subbasins both SWMP detention ponds and NWI in-channel wetland areas were represented as wetlands. The information used to configure wetlands in the ECWSWAT model is provided in Appendix A.

Major input requirements for wetlands include subbasin drainage area, surface area and volume. SWAT-simulated hydrologic processes associated with the "wetlands" include inflow, outflow, storage,

evapotranspiration (ET), and percolation loss. Sediment and nutrient transformations simulated in wetlands and reservoirs are limited to removal by settling; other transformation processes are ignored.

In addition to reservoirs, SWMP ponds, and wetlands, other off-channel depressions are present within the watershed. These offline depressions are represented as local "WATR" (water) HRUs that will not generate any hydrologic feedback to the reach (i.e., do not contribute flow to reach).

Land uses represented in the model include agriculture (row crops), forest, pasture and urban (Table 2). Agriculture (27%), urban (24%) and pasture (20%) are the most prominent land uses in the watershed. The row crops represented include corn and soybean.

Table 2. Land uses represented in the ECWSWAT model

Land Use	Area	%
Agriculture (row crops)	18,090	27%
Forest	2,990	5%
Pasture (alfalfa)	13,393	20%
Rangeland	773	1%
Urban Low Density	12,095	18%
Urban Medium Density	3,505	5%
Urban High Density	431	1%
Urban Transportation	68	0.1%
Reservoir	1,813	3%
Wetland (SWMP ponds/in-channel wetlands)	7,110	11%
WATR (off-channel depression)	6,066	9%
Total	***66,334***	***100%***

The framework of the agriculture management schedules defined in the model includes crop rotations, tillage operations and fertilizer applications. Information on cropping and tillage patterns in the Elm Creek watershed was provided by Jim Kujawa, Hennepin County Department of Environmental Services (personal comm.). The row crops are represented by a corn-soybean (C-S) rotation system. The rotation scheme is randomized across the cropland HRUs such that in a given year the acreage of row-crop cultivation is split equally between corn and soybean.

Planting of corn and soybean typically occurs in May, with harvesting occurring in October. Tillage is implemented during pre-planting and post-harvest periods for both corn and soybean rotations. Fertilizer is applied in the form of both commercial and manure fertilizer during corn cultivation. The major form of commercial fertilizer in the Elm Creek watershed region is urea (Bierman et al., 2011). As reported in Bierman et al. (2009) an average N application of 129 lb N/acre (which translates to urea application at 280.4 lb/acre) was specified in the model. A livestock inventory of total manure generated in the watershed during 2006, 2008 and 2011 was provided by TRPD. Using livestock inventory manure data for 2006, 2008 and 2011, average annual manure generated in the watershed was calculated. Manure application was considered at the subbasin level. Information regarding spatial distribution of livestock manure production was utilized to determine total annual manure generated by animal type within each subbasin. Livestock manure generated in a subbasin is applied to the available corn, soybean and alfalfa areas within that subbasin. SWAT model requires specification of manure application rates on a dry weight basis. Manure application rates were calculated for each subbasin based on the assumptions that:

1) 80% of the annual manure generated is recovered for application; 2) all cropland and alfalfa areas receive manure treatment; and 3) manure is disposed onto the land regardless of crop nutrient requirements. Manure application is specified in the model once during fall. The management practices associated with a typical C-S rotation represented in the model are shown in Table 3.

Urban areas were represented by growing Kentucky Bluegrass[1]. Low and medium density residential HRUs were fertilized with 25-0-3 at *The Andersons Turf Products* recommended "low" rate of 4 lbs/1,000 square feet (194 kg/ha). A harvest-only operation was scheduled in the middle of the growing season to simulate lawn cutting. At the end of the growing season, all low and medium density residential HRU biomass was converted to residue. The few high density urban and urban-transportation HRUs were simulated with auto-applications of nitrogen fertilizer and end-of-season kill operations to convert their biomass to residue.

Table 3. Management schedule representing a typical C-S crop rotation

Year / Crop Type	Date	Operation Type	Description
1	29-Apr	Tillage	Field Cultivator Ge15ft
CORN	30-Apr	Tillage	Field Cultivator Ge15ft
	3-May	Planting	Corn
	24-May	Fertilizer	Urea
	17-Oct	Harvest & Kill	Corn
	22-Oct	Tillage	Chisel Plow Gt21ft
	27-Oct	Tillage	Manure
2	15-May	Tillage	Field Cultivator Ge15ft
SOYBEAN	20-May	Planting	Soybean
	15-Oct	Harvest & Kill	Soybean
	4-Nov	Tillage	Chisel Plow Gt21ft
	9-Nov	Fertilizer	Manure

Hydrologic soil groups (HSGs) represented in the Elm Creek watershed model consist of 4% HSG type A (well drained), 59% HSG type B (moderately well drained), 28% HSG type C (moderately poor to poorly drained) and 9% HSG type D (poorly to very poorly drained). Croplands are present in HRUs with HSG type B and C soils. Subsurface tile drainage was assumed to be present in cropland HRUs with HSG type C soils. Approximately 36% of the cropland areas (or 11% of the total watershed area) are assumed to be tile drained.

SWAT allows the user to input loadings of water, sediment and nutrients from point sources to the main channel network. These loadings are routed through the channel network along with the loadings generated by the land areas. One point source, Maple Hill Estates, is located within subbasin 4 of the Elm Creek watershed. Monthly loadings of water, sediment and nutrients were developed for the Maple Hill Estates based on data provided by TRPD from MPCA. These loadings were directly added to the stream reach of subbasin 4.

[1] Kentucky Bluesgrass is a common lawn grass in Minnesota. Source: http://www.extension.umn.edu/garden/yard-garden/lawns/seeding-and-sodding-home-lawns/

Model Calibration and Confirmation Approach

This section describes the model calibration and confirmation approach, including an overview of the data available for model calibration/confirmation and a description of the visual and statistical metrics and targets used to evaluate model performance.

Calibration and Confirmation Data

The following section describes the key observed streamflow data utilized to support the calibration and confirmation of the ECWSWAT model. The locations of streamflow monitoring stations in the Elm Creek watershed are shown in Figure 2. A total of eight monitoring stations were selected for the purpose of hydrology model calibration and confirmation based on consultation with TRPD. A summary of streamflow data availability for the selected stations is shown in Table 4. Streamflow records for these stations were provided by TRPD.

Table 4. Summary of streamflow and water quality data availability

Station ID	Description	Period of Record	Frequency	Calibration/ Confirmation
HAMEL	Elm Cr. at EC Golf Course	2000 - 2012	Daily	Calibration
EC77	Elm Cr. at 77th Ave.	2007 - 2012	Daily	Confirmation
RCSL	S. Fork Rush Cr. at Shannon Lane	2009 - 2012	Daily	Calibration
RCTH	Rush Cr. at Trail Haven Rd.	2009 - 2012	Daily	Calibration
RT	Rush Cr. at Territorial Rd.	2007 - 2012	Daily	Confirmation
DC	Diamond Cr. near mouth	2007 - 2012	Daily	Calibration
USGS	Elm Cr. - USGS gauge	2001 - 2012	Daily	Confirmation

Model Calibration and Confirmation Approach

The calibration process followed a logical order according to model parameters (or coefficients) that depend on each other and taking into account which model parameters are most sensitive and uncertain. The hydrology calibration was conducted first, and model performance was evaluated at a range of timescales (e.g., annual, monthly, and daily). Next, total suspended solids (TSS), total nitrogen (TN), and total phosphorus (TP) were calibrated in terms of annual landscape unit area loading rates.

During calibration, model predictions were compared with site-specific streamflow measurements or literature unit area loadings (UALs) in the case of sediment and nutrients. The goodness of fit was evaluated using both statistical and visual techniques. Next, a subset of model parameters was adjusted within an acceptable range using best professional judgment. After the parameter adjustments were made, the model was re-run, and results were reviewed to determine if the model fit to data had improved. The process continued until it was determined that the best possible calibration had been reached, given available data and model limitations.

For hydrology, model calibration and confirmation was performed for the 2000 – 2012 period based on observed streamflow data from seven monitoring stations. Data from four monitoring sites, including HAMEL, RCSL, RCTH and DC, were used for calibration. Following calibration, model confirmation was performed by running the model without changing any parameters and comparing the results to available data from a second set of monitoring stations. Data from three monitoring sites, including EC77, RT, and the USGS Elm Creek station were utilized for model confirmation.

For sediment and nutrients the calibration targets are the annual average unit area loading rates (in lbs/ac/yr) established in the literature for various land use types. Model calibration was achieved by attaining reasonable agreement of the simulated UALs with the ranges available from literature.

Visual Evaluation and Statistical Metrics

For the hydrology calibration, model performance was evaluated using both visual and statistical comparisons of simulated and observed data. Graphics developed to visually assess model performance included annual bar charts, annual/monthly/daily time series plots, and daily scatter plots. The statistical metrics included the coefficient of determination (r^2), the Nash-Sutcliffe model efficiency coefficient (NSE) and percent bias (PBIAS).

The coefficient of determination (r^2) was used to evaluate the goodness of fit of the model to the observed data. An r^2 value of one (1) indicates a perfect correlation and a value of zero (0) indicates no correlation between model predictions (S) and observations (O):

$$r^2 = \left(\frac{\sum_{i=1}^{n}(O_i - \bar{O})(S_i - \bar{S})}{\sqrt{\sum_{i=1}^{n}(O_i - \bar{O})^2}\sqrt{\sum_{i=1}^{n}(S_i - \bar{S})^2}} \right)^2$$

NSE indicates how well observed versus simulated data fits a 1:1 line. A NSE value of one (1) indicates a perfect prediction. Values between 0.0 and 1.0 are generally viewed as acceptable levels of performance, whereas values <0.0 indicate that the mean observed value is a better predictor than the simulated values, which indicates unacceptable performance (Moriasi et al. 2007). The NSE is calculated using the following equation:

$$NSE = 1 - \frac{\sum_{i=1}^{n}(O_i - S_i)^2}{\sum_{i=1}^{n}(O_i - \bar{O})^2}$$

where O is observed and S is a paired simulated value.

Percent bias (PBIAS) measures the average tendency of the simulated results to be larger or smaller than the observed data (Gupta et al. 1999, Moriasi et al. 2007). The optimal value of PBIAS is zero (0) with low values indicating an unbiased model simulation. Positive values indicate that the model has an underestimation bias, and negative values indicate that the model has an overestimation bias (Gupta et al. 1999, Moriasi et al. 2007).

$$PBIAS = \left[\frac{\sum_{i=1}^{n}(O_i - S_i) * (100)}{\sum_{i=1}^{n}(O_i)} \right]$$

where *O* is observed and *S* is simulated.

Statistical metrics were not established for pollutant loads (TSS, phosphorus and nitrogen). Instead, visual comparisons of model-simulated landscape UAL rates and literature values were performed to evaluate model performance.

Model Performance Targets

The model performance targets established for the ECWSWAT model hydrology calibration are summarized in Table 5. The prescribed model calibration tolerances or targets adhere to the generally accepted target recommendations (Donigian 2000 and 2002, Moriasi et al. 2007, Parajuli et al. 2009, Duda et al. 2012). The model performance target ranges apply to annual or monthly mean values. Typically, the statistical performance for daily predictions is expected to fall below the statistical

performance ratings specified for monthly and annual time scales. If the daily statistics do not meet model performance targets specified for the monthly and annual time scales, it does not mean that the model does not have an acceptable level of performance and cannot be used at daily time scales. Instead, the wider range in the daily statistics reflects the increased difficulties in simulating the short-term timing of streamflow and water quality constituents, given the uncertainties in the model inputs in regard to the coverage, resolution, and accuracy of available data (e.g., precipitation). Therefore, the daily statistics are provided for informational purposes and are not formally evaluated against the model performance metrics and targets relevant to the monthly and annual time scales.

Table 5. Targets established for the ECWSWAT model calibration on an annual and monthly basis.

Parameters	Statistical Metric		
	r2	NSE	PBIAS (%)
Hydrology	0.50 to <0.90 *'Very Good'* 0.25 to 0.49 *'Satisfactory'* <0.25 *'Unsatisfactory'*	0.50 to <0.90 *'Very Good'* 0.25 to 0.49 *'Satisfactory'* <0.25 *'Unsatisfactory'*	PBIAS < ±15 *'Very Good'* ±15 ≤ PBIAS < ±25 *'Satisfactory'* PBIAS ≥ ±25 *'Unsatisfactory'*

Calibration and Confirmation Results

Hydrology

The first step in the hydrology calibration was the evaluation of the water budget to achieve a reasonable balance between evapotranspiration, surface runoff, lateral flow, tile flow, groundwater flow and seepage to deep aquifers. Achieving a proper balance between these hydrologic processes has important implications for sediment and nutrient transport. For Minnesota watersheds, evapotranspiration represents approximately 70% of the annual precipitation with the majority of the remaining fraction accounting for streamflow (Fairbairn 2011, Folle 2010). The water budget simulated by the model for the Elm Creek watershed is depicted in Figure 3.

The annual average precipitation for the watershed is 30.5 inches, based on climate dataset used in the ECWSWAT model. Evapotranspiration represents the largest component of the water balance, accounting for 64% of the precipitation input to the land surface. Water yield, the fraction of the water budget that constitutes streamflow, accounts for 22% of the precipitation input. About 14% of the precipitation input is attributed to seepage to deep aquifers.

The SWAT model simulates wetland influence on the hydrologic pathways. A portion of the surface, lateral, and tile flow originating within a subbasin are routed through the wetlands based on the wetland drainage area fraction (i.e., fraction of subbasin area draining through the wetland). These flow components, after being routed through the wetland, collectively become wetland outflow. Groundwater flow generated in a subbasin directly enters the stream network without any interaction with the wetland represented in that subbasin. The water yield components for the Elm Creek watershed are thus represented by a surface runoff flow, a subsurface flow (which includes tile flow, lateral flow and groundwater flow), and total wetland outflow. Approximately 89% of the watershed area drains through the wetlands represented in the ECWSWAT model. Therefore, wetland outflow represents a significant component of the overall water yield. Based on model simulation results, direct surface runoff contributes 6.4% of the total annual water yield. Lateral flow (i.e., flow through the unsaturated zone not passing through a wetland) contributes 0.6% of the water yield, and direct tile flow contributes 0.3% of the annual

water yield. Wetland outflow (all of which entered the wetlands via surface, lateral, and/or tile flow) makes up 54% of the annual average water yield.

Roughly 39% of the annual streamflow in the Elm Creek watershed is sustained by groundwater flow (i.e., return flow from shallow aquifer). According to Delin and Falteisek (2007), the annual rate of recharge to unconfined aquifers for watersheds in southeastern Minnesota typically ranges from 6 – 8 inches. This estimate is consistent with the 6.9 inches of shallow groundwater flow and seepage to deep aquifers estimated for the Elm Creek watershed by the calibrated SWAT model.

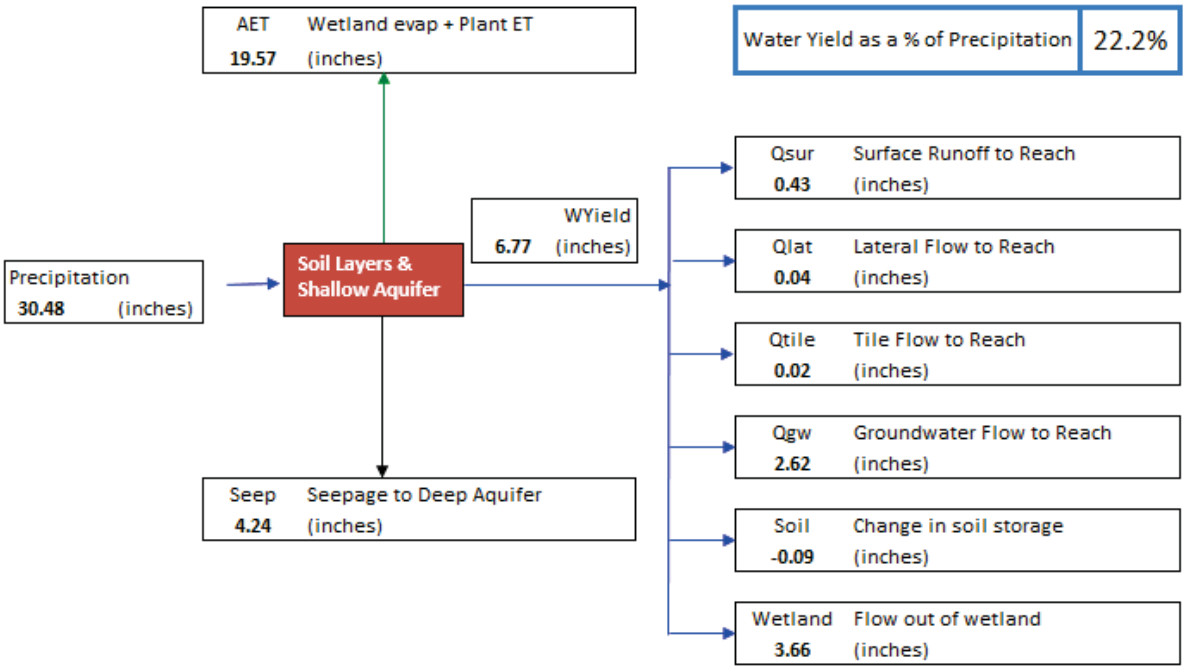

Figure 3. Elm Creek watershed SWAT model simulated annual average water balance (2000-2012)[2]

The next step in the hydrology calibration included an assessment of model performance relative to annual, monthly and daily streamflow observations. Model outputs were compared to streamflow records for several gaging stations throughout the watershed. Four stations served as calibration sites, including HAMEL, RCSL, RCTH and DC. Three additional sites, including EC77, RT and USGS were used to confirm model performance. The most complete data record was available for the USGS station (Elm Creek near Champlin, MN). At other sites there were noticeable data gaps in the observed streamflow throughout the 2000-2012 simulation periods, particularly during winter months. Therefore, streamflow data from the USGS gage at Elm Creek were primarily used to assess model performance with respect to winter/spring hydrology. For the purpose of monthly comparisons, monthly average streamflow was estimated using only months that had 70% or greater daily data coverage. For the purpose of annual comparisons, data gaps were first filled by using a "drainage area ratio" approach to scale daily observed flow at the USGS gage to other stations and then annual average streamflow was estimated.

Model performance was evaluated using visual comparisons of observed and simulated streamflow at annual, monthly, and daily time scales (Figures 4 – 12). The simulation represented a range of hydrologic conditions: a wet year (2002); dry years (2000, 2003, and 2005-2009) and average years (2001, 2004,

[2] 89% of the Elm Creek watershed is simulated as draining through wetlands. In Figure 3, Q_{sur}, Q_{lat}, Q_{tile}, and Q_{gw} are hydrologic contributions from subbasins that enter directly into the stream network without being intercepted by wetlands.

and 2010-2012)[3]. Overall, the model was able to reasonably reproduce the range of hydrologic conditions observed in the watershed including annual, monthly, and daily average streamflows. Calibration stations HAMEL (upstream station) and DC (downstream station) are reviewed below as well as confirmation station USGS (Figures 4 – 12). Graphical results for other calibration and confirmation stations can be found in Appendix C.

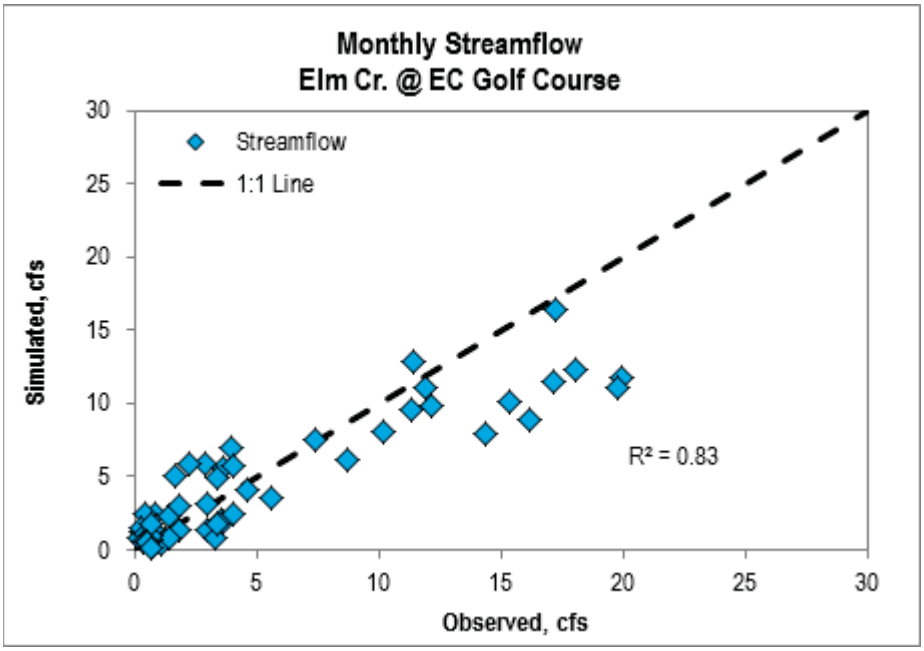

Figure 4. A 1:1 plot of the monthly simulated and observed streamflow at calibration site HAMEL (Elm Creek at the Elm Creek Golf Course) for years 2000-2012.

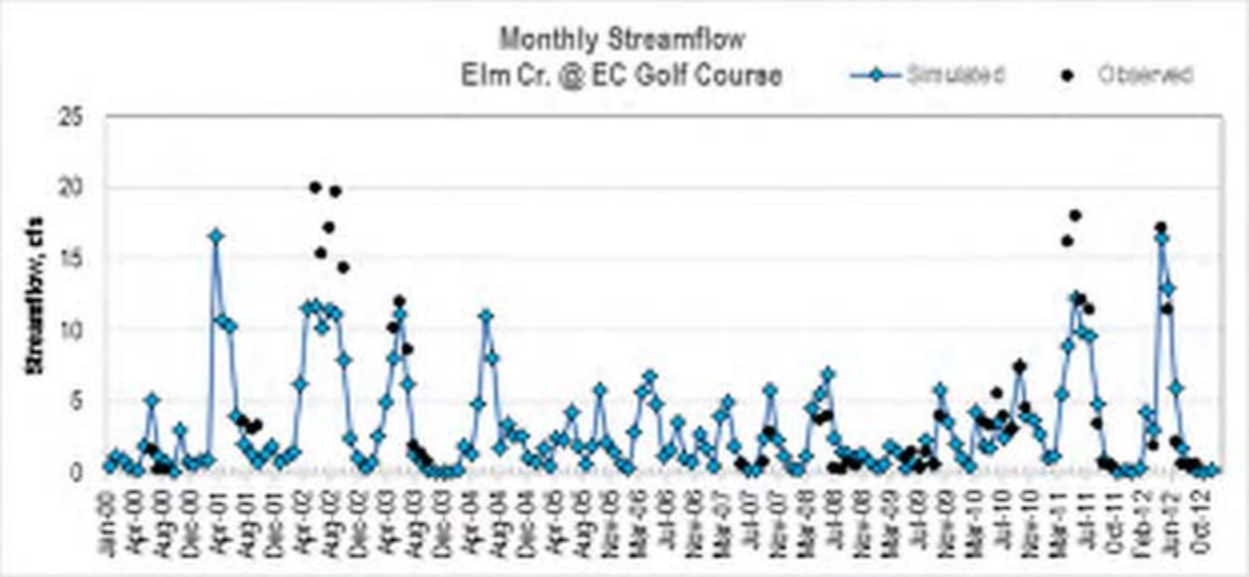

Figure 5. Monthly average simulated and observed streamflow at calibration site HAMEL (Elm Creek at the Elm Creek Golf Course) from 2000-2012.

[3] "Wet" and "dry" are defined here as 110% and 90%, respectively, of the 30 year normal annual precipitation as determined by the National Climatic Data Center for the Minneapolis St. Paul International Airport. Average years are those which fall in the range between "wet" and "dry".

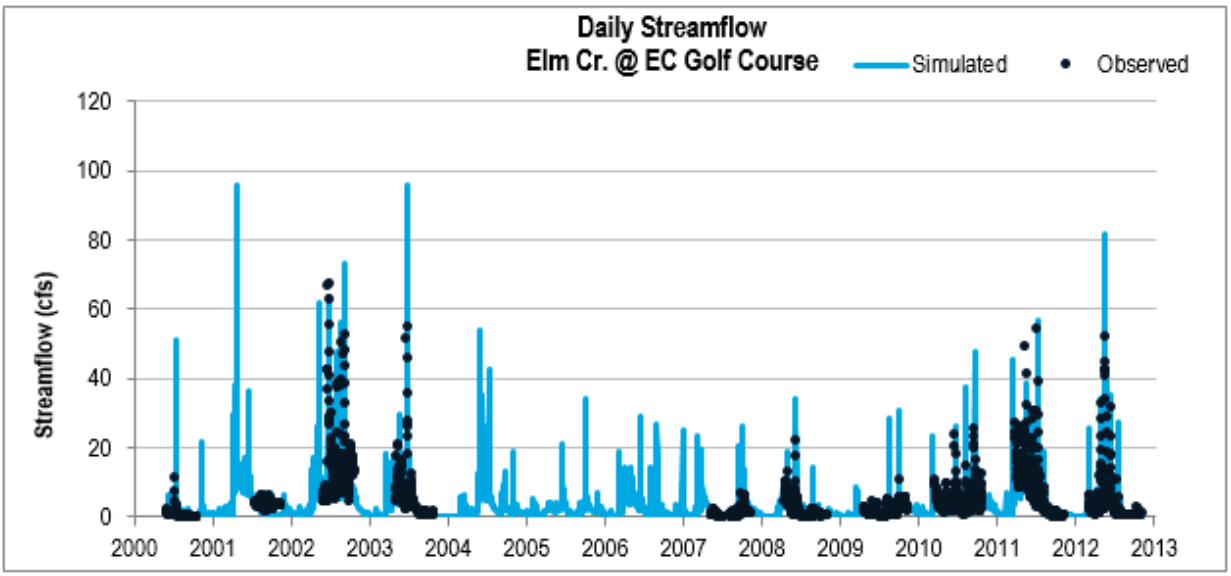

Figure 6. Daily simulated and observed streamflow at calibration site HAMEL (Elm Creek at the Elm Creek Golf Course) from 2000-2012.

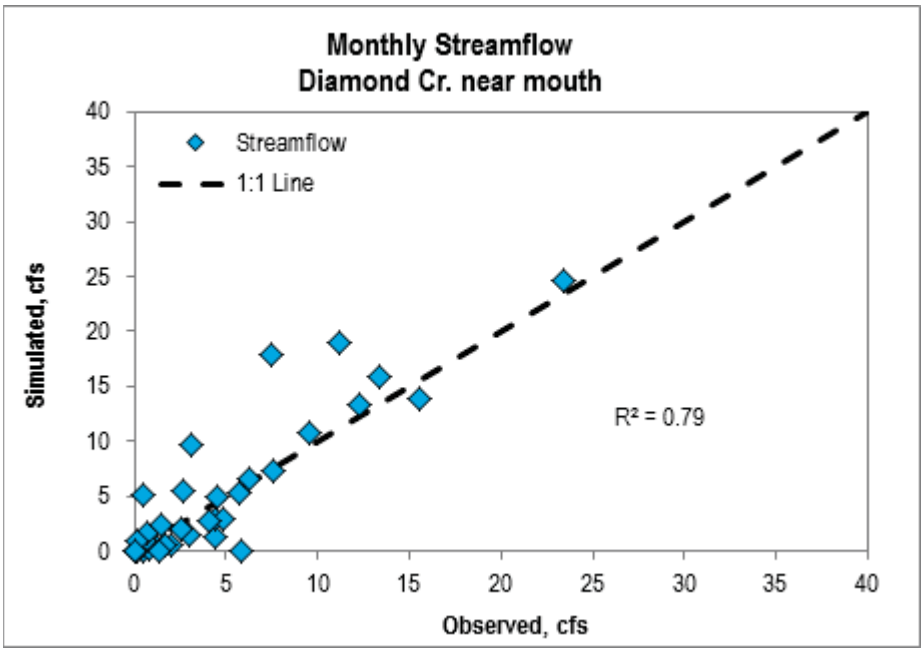

Figure 7. A 1:1 plot of the monthly simulated and observed streamflow at calibration site DC (Diamond Creek near mouth) for years 2007-2012.

Figure 8. Monthly average simulated and observed streamflow at calibration site DC (Diamond Creek near mouth) for years 2007-2012.

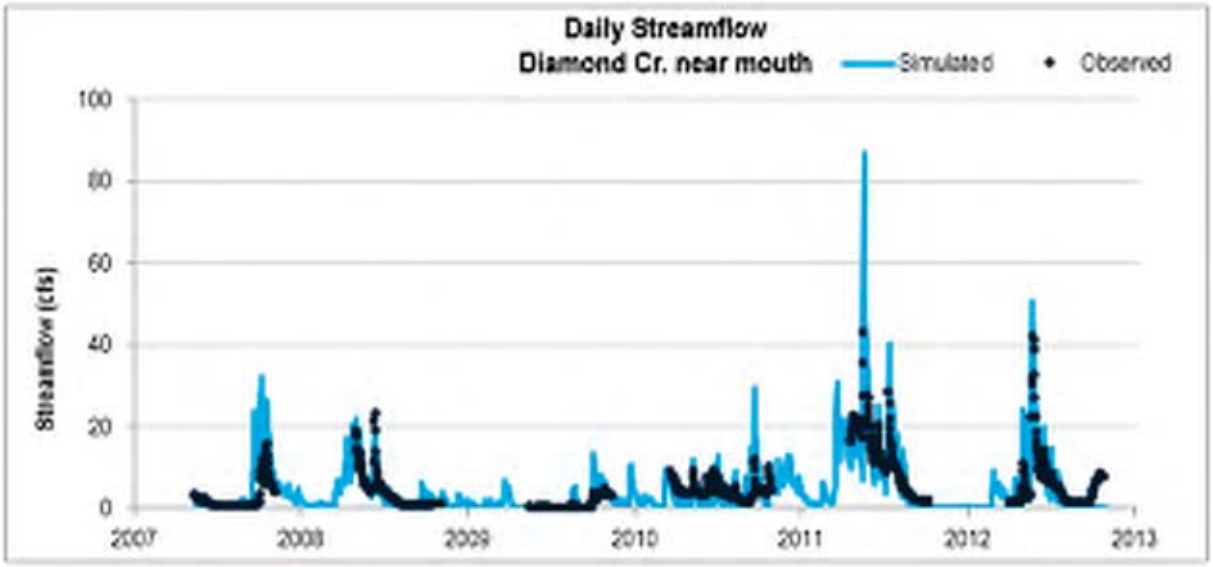

Figure 9. Daily simulated and observed streamflow at calibration site DC (Diamond Creek near mouth) for years 2007-2012.

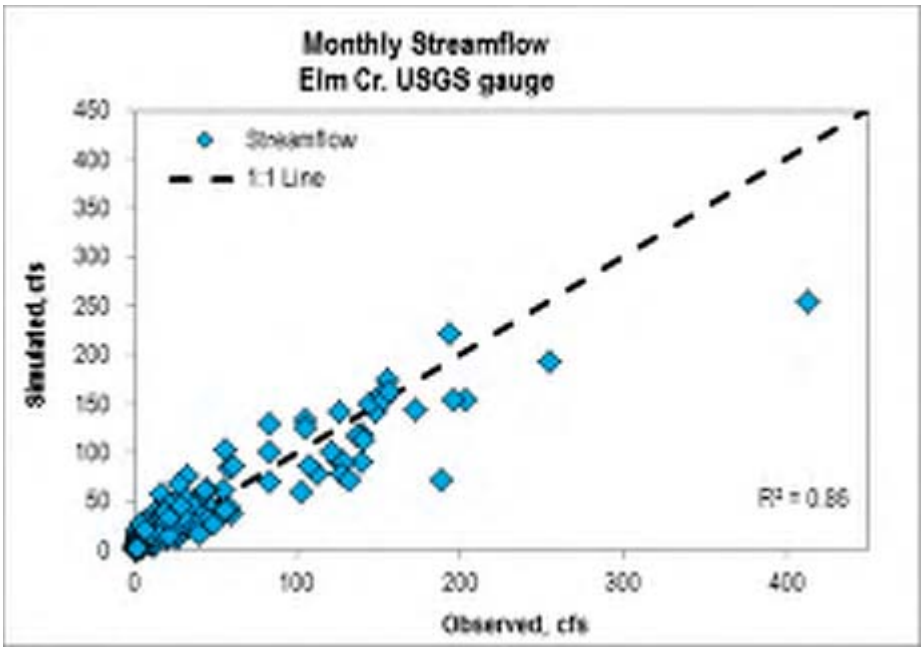

Figure 10. A 1:1 plot of the monthly simulated and observed streamflow at confirmation site USGS Elm Creek (USGS gage 05287890) for years 2000-2012.

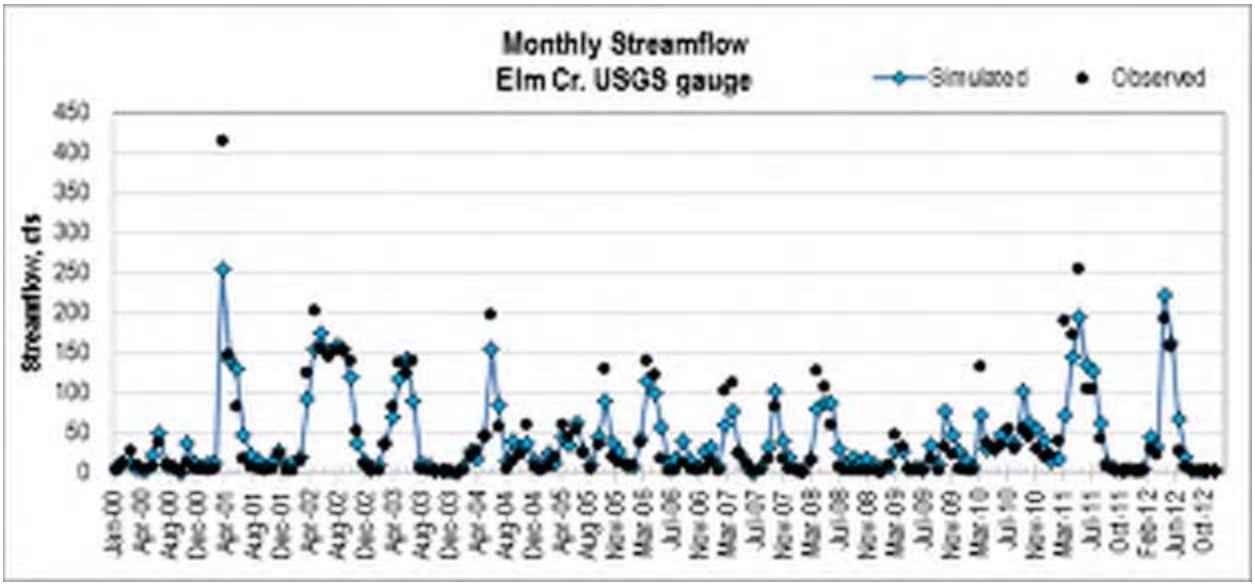

Figure 11. Monthly average simulated and observed streamflow at confirmation site USGS Elm Creek (USGS gage 05287890) for years 2000-2012.

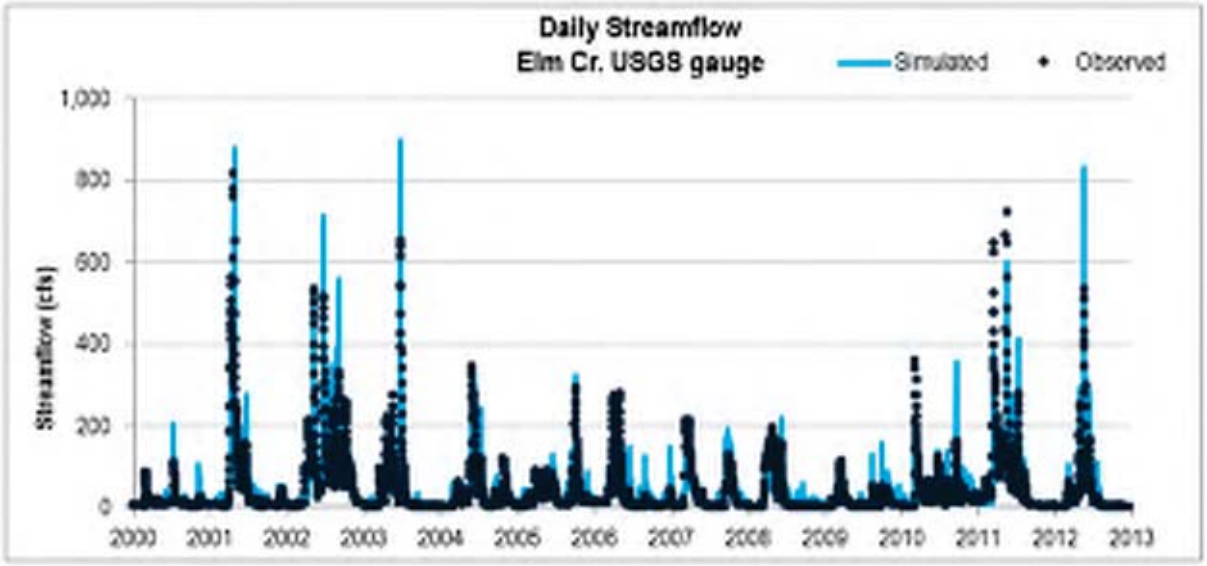

Figure 12 Daily simulated and observed streamflow at confirmation site USGS Elm Creek (USGS gage 05287890) for years 2000-2012.

The statistical targets and model results for the hydrology calibration are shown in Table 6. Overall, the calibration of streamflow resulted in a "very good" model performance based on statistical and visual comparison of observed and simulated streamflow (Table 6, Figures 4-12). A brief summary of the model performance is provided below:

- The annual and monthly r^2 values are greater than 0.57 ("very good" performance);
- The annual NSE values are above 0.85 ("very good" performance) for all calibration stations and above 0.86 ("very good" performance) for all confirmation stations;
- Monthly NSE values at all calibration and confirmation stations are greater than 0.50 and meet the "very good" target performance standards; and
- At the annual and monthly time scales, the PBIAS ranges from ±37.45% to ±2.48% with 8 values rated as "very good" and 5 values rated as "satisfactory". Monthly PBIAS for station RCTH rated as "unsatisfactory".

The relatively high monthly PBIAS value for station RCTH is a consequence of the model not reproducing large flow events that occurred between May 22nd, 2011 and May 24th, 2011. The model under-predicted this flow event at all Rush Creek stations, and this model behavior contributed significantly to the "unsatisfactory" PBIAS metric. The precipitation inputs to the Rush Creek sub basins were represented by Medina, Rockfork and Anoka stations. The total rainfall amount recorded over the two day period of May 21st to May 22nd at three stations varied between 71 mm and 107 mm. It is possible that the high streamflow response during May 21 – 22, 2011 observed in Rush Creek tributaries was caused by a strong local rainfall event not captured by the precipitation stations represented in the model.

The model also under predicted streamflow at HAMEL during 2002. Peak streamflows observed at HAMEL were typically sustained for few days and were characterized by an extended recession to the baseflow. ECWSWAT was able to predict the event magnitude reasonably well, but the sustained peak flow response was not captured by the model. Possible reasons for this discrepancy include under-representation of precipitation used in the model for 2002 and/or potential external groundwater influence to the HAMEL subbasins.

Table 6. Calibration and confirmation statistics for the streamflow model performance evaluation

		Calibration				Confirmation		
Time Interval	Statistic	HAMEL	RCTH	RCSL	DC	USGS	EC77	RT
Annual	*Coeff. of Determination (R^2)*	0.94	0.75	0.90	0.95	0.96	0.87	0.75
	Nash-Sutcliffe Efficiency (NSE)	0.91	0.85	0.93	0.97	0.98	0.91	0.86
	Percent Bias (PBIAS)	16.13	-18.35	12.76	2.48	-3.36	7.64	20.95
Monthly	*Coeff. of Determination (R^2)*	0.83	0.57	0.87	0.79	0.86	0.85	0.74
	Nash-Sutcliffe Efficiency (NSE)	0.77	0.53	0.86	0.65	0.84	0.84	0.58
	Percent Bias (PBIAS)	15.36	-37.45	6.80	-14.56	-3.38	2.97	20.81
Daily	*Coeff. of Determination (R^2)*	0.41	0.32	0.45	0.66	0.63	0.17	0.25
	Nash-Sutcliffe Efficiency (NSE)	0.37	0.31	0.43	0.36	0.63	-0.16	0.21
	Percent Bias (PBIAS)	14.84	-33.02	14.92	-12.12	-3.35	2.34	19.21

In summary, the hydrology calibration and confirmation of the Elm Creek watershed resulted in achieving a large majority of the model performance targets. The model is able to simulate watershed hydrology and streamflow with a reasonable level of accuracy and therefore provides a suitable foundation for the simulation of land management scenarios to estimate the potential benefits of best management practices (BMPs) and the potential impacts of land development in the Elm Creek watershed. The final hydrology model calibration parameters are provided in Appendix B.

Sediment

Soil erosion is a function of climate, soils, land use/land cover, and land management practices. Sediment load yields are computed at the HRU level within the SWAT model. The Modified Universal Soil Loss Equation (MUSLE) is used to calculate upland sediment yields (Williams 1975, Williams 1995, Neitsch et al. 2011). As with the hydrologic components, erosion loads are aggregated at the subbasin level, routed through the wetlands (if necessary), and then added to the channel (reach) system. In SWAT, wetlands settle out sediment as a function of a user defined settling rate coefficient (also used for reservoir sediment settling) and particle size. Once in the reach, sediment routing is simulated using the simplified version of the Bagnold approach (Bagnold 1977) where sediment transport is a function of peak channel velocity (Neitsch et al. 2011).

The main objective of the sediment calibration was to achieve an appropriate representation of sediment contributions from upland sources. Upland sediment loads generally expected from various land use types (i.e., watershed UALs for each land use type) were obtained from literature (CH2M Hill and AquaTerra Consultants 2002). Model parameters were adjusted to achieve similarity between the simulated and literature reported UALs for each land use type. It is important to note that the literature-based and simulated UALs discussed in this section reflect sediment loadings from the landscape prior to being routed through the wetlands.

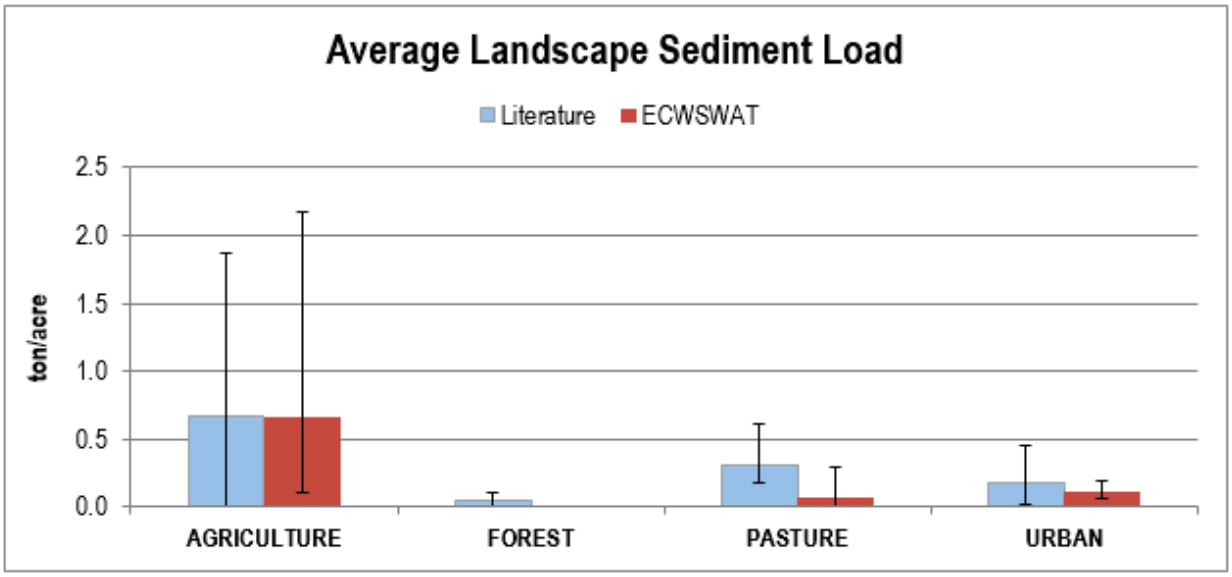

Figure 13 Average annual simulated landscape sediment loading in the Elm Creek SWAT model as compared to literature values. Whiskers represent maximum/minimum values to quantify the literature and simulated ranges. Literature UALs were compiled from CH2M Hill and AquaTerra Consultants (2002)[4].

Loads from agricultural HRUs (land areas characterized by corn and soy rotations) compared well with the literature average values (Figure 13). This was an especially important target to meet, as agricultural land areas make up roughly 27% of the modeled watershed area. Forested land areas tended to only export appreciable sediment amounts during years of high precipitation. The average annual sediment loads for this land type were somewhat lower than literature values. This was deemed acceptable as forest area accounted for approximately 5% of the total area and was not modeled as having any logging or fire operations which could increase sediment yields. Pastured HRUs tended to generate lower sediment yield than represented by literature-based values. This might be explained by the inclusion of degraded pasture areas in the literature review which could be expected to have elevated sediment export. Pastured areas in the Elm Creek SWAT model were simulated as alfalfa areas under haying operation and were expected to transport much less sediment to the reaches than agricultural areas. The sediment UALs from the urban HRUs compared well with the literature values.

A summary comparison of model-predicted UAL values and UALs reported in literature sources is shown in Table 7. Overall, the model-predicted UALs compared reasonably well with the literature values, particularly for the land use (agriculture) that accounts for the largest percentage of land area in the watershed. The consistency between SWAT-predicted and literature-based UALs suggest that the model is able to simulate landscape sediment loading and delivery with a reasonable level of accuracy.

[4] All TSS, TN, and TP "URBAN" literature values, referenced in the figures and tables, are average of Urban-Low Density & Urban-Medium Density land uses, as these two land uses make up nearly 97% of the urban land areas represented in the ECWSWAT model.

Table 7 Comparison of simulated and literature-based unit area loads for the Elm Creek watershed. Literature UALs were compiled from (CH2M Hill and AquaTerra Consultants 2002).

	Sediment (tons/acre/yr)		
Land Use Type	Literature Range	Literature Average	Elm Creek SWAT
Agriculture	0.009 - 1.87	0.67	0.66
Urban	0.04 - 0.45	0.18	0.11
Forest	0.008 - 0.11	0.04	0.003
Pasture	0.18 - 0.61	0.31	0.06

After establishing reasonable agreement of model simulation and literature reported UALs, in-stream sediment transport was simulated. Model parameters related to sediment settling and re-suspension were adjusted in order to bring simulated in-stream TSS concentrations within the range of observed values. This process continued until it was determined that the best possible results had been achieved, given the available data and model limitations.

A large proportion of the sediment mobilized from the landscape settled in the reservoir systems represented in the model. The stream channels in the Elm Creek watershed are a small net source of sediments. Over the 2000-2012 simulation period, the average sediment loading rate at the watershed outlet is 0.017 tons/acre/year. This loading rate is consistent with 0.010 – 0.025 tons/acre/year reported for neighboring Bassett Creek (MCES, 2010). The ECWSWAT simulated watershed delivery ratio is 29% (i.e., of total sediment mobilized within the watershed 29% is delivered to the outlet).

Table 8. Simulated annual average landscape sediment delivery to the watershed outlet for the Elm Creek watershed (2000-2012).

Subbasin[5] Yield (tons/year)	Net Settling in Reservoirs (tons/year)	Net Channel Erosion (tons/year)	Sediment Yield at outlet (tons/year)
3,505	(2,583)	133	1,008

The total annual average sediment load (2000-2012) simulated by the SWAT model at the outlet of the watershed is 1,008 tons/year. The total landscape sediment yield (3,505 tons/year) and the contributions by land use types simulated by the SWAT model are shown in Figure 14. Soil erosion from cropland areas contributes the majority of the sediment originating from the upland landscapes, which is expected given that cropland is a dominant land use in the watershed and characterized by the highest UAL rate.

[5] Subbasin yield represents sediment loading after transport through the wetlands.

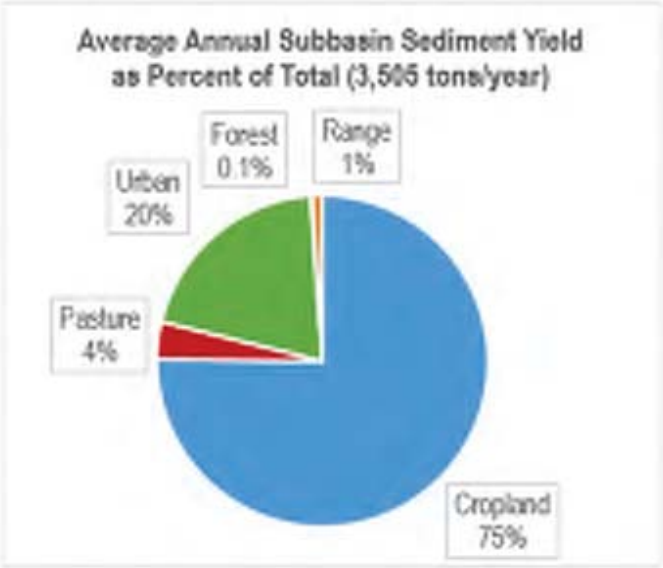

Figure 14. Average annual simulated sediment load (2000-2012) by land use type, as estimated by the SWAT model for the Elm Creek Watershed.

A comparison of simulated and observed TSS measurements (Figures 15 and 16) shows that the Elm Creek SWAT model is predicting in-stream TSS concentrations within acceptable ranges.

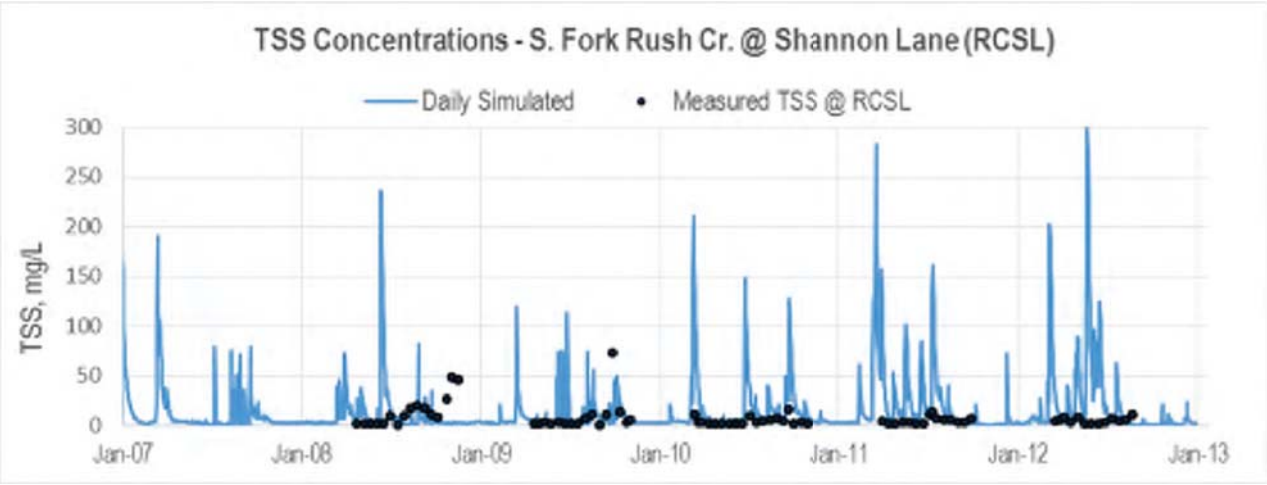

Figure 15. Simulated and observed TSS concentrations at station RCSL (S. Fork Rush Creek @ Shannon Lane). Simulated values are plotted as five day moving averages.

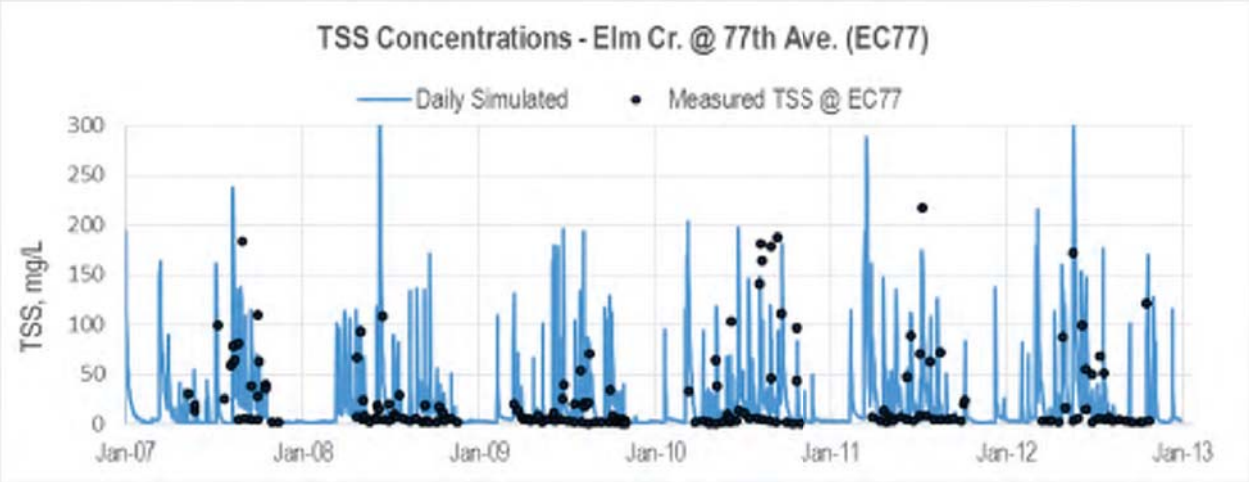

Figure 16. Simulated and observed TSS concentrations at station EC77 (Elm Creek @ 77th Ave.). Simulated values are plotted as five day moving averages.

Nitrogen

Upland nitrogen cycling and transport is an HRU level process in SWAT. The main components of the nitrogen cycle represented in SWAT include nitrogen storage in the soil matrix, nitrogen added in the form of manure or mineral fertilizer, and nitrogen stored in live plant biomass and residue. SWAT model algorithms simulate the mineralization, decomposition, and immobilization processes that control the transformations of soil nitrogen (Neitsch et al. 2011). Nitrogen processes simulated by SWAT include crop uptake, transport in surface runoff in both the solution phase and on eroded sediment, percolation below the root zone, lateral subsurface flow including tile drains, and volatilization to the atmosphere (Neitsch et al. 2011). The cycling and transport of nitrogen in SWAT is determined by the simulated hydrology, plant growth, and erosion processes. Nitrogen loads generated at the HRU level are aggregated to the subbasin level, routed through connected wetlands, and then added into the channel associated with the subbasin. Nutrient (phosphorus and nitrogen) routing includes the fate and transport of nutrients based on instream kinetics adapted from the QUAL2E model.

The calibration approach for total nitrogen is similar to that described for sediment. Upland nitrogen yields typically expected from various land use types (i.e., UALs for each major land use type) were obtained from literature. These literature average UAL values served as the calibration targets for the landscape loadings of TN simulated by the SWAT model.

Landscape unit area loadings of TN by land use type generally compared well with the literature values (Figure 17, Table 9). Consistent with the literature values, the TN loading rates were the highest from the agriculture areas and lowest from the forest landscape. After agriculture areas, TN loadings were highest for the pasture areas that were modeled as receiving manure treatment. The SWAT-predicted UALs of TN for the urban areas were also within the range of literature average values. Overall croplands and pasture contribute 62% and 22%, respectively, of the TN delivered from upland to the main channel (Figure 18).

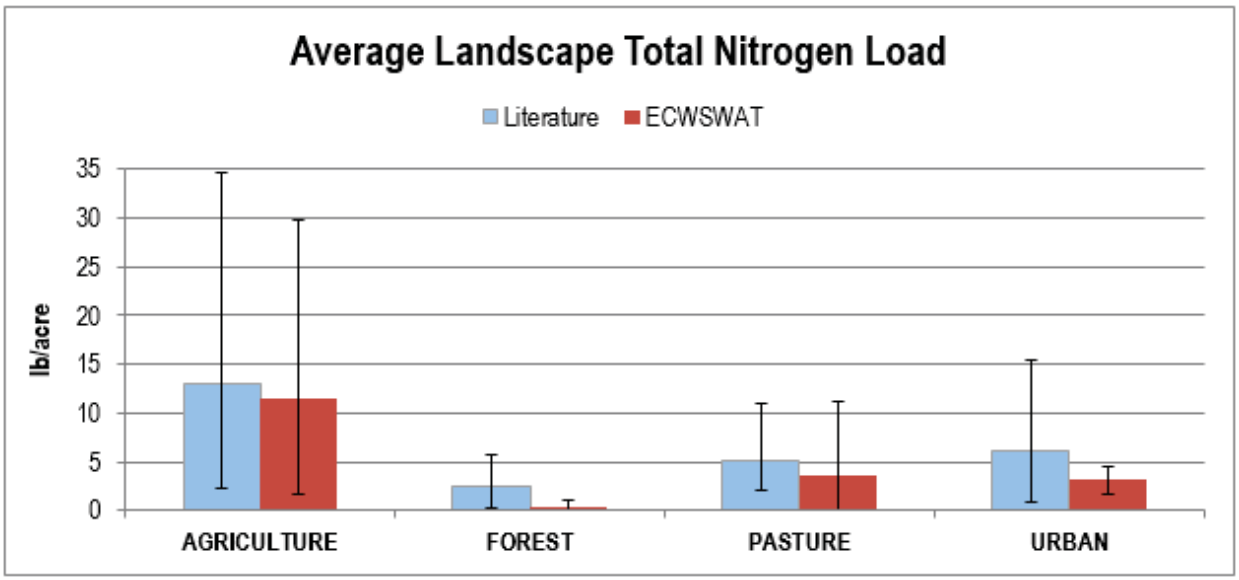

Figure 17. Average annual simulated landscape sediment loading in the Elm Creek SWAT model as compared to literature values. Whiskers represent maximum/minimum values to quantify the literature and simulated ranges. Literature UALs were compiled from CH2M Hill and AquaTerra Consultants (2002).

Table 9. Total nitrogen UALs from the calibrated Elm Creek SWAT model (2000-2012). Literature UALs were compiled from (CH2M Hill and AquaTerra Consultants, 2002).

	TN (lbs/acre/yr)		
Land Use Type	Literature Range	Literature Average	Elm Creek SWAT
Agriculture	2.23 - 34.6	12.9	11.4
Urban	0.78 - 15.4	6.2	3.1
Forest	0.35 - 5.7	2.5	0.4
Pasture	2.1 - 11.0	5.2	3.7

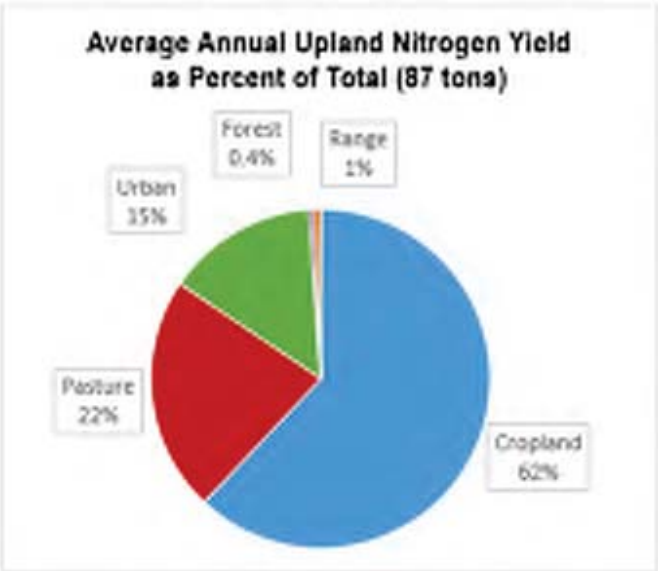

Figure 18. Average annual simulated nitrogen load (2000-2012) by land use type, as estimated by the SWAT model for the Elm Creek Watershed.

Following calibration of the landscape TN loading, wetland processes were activated in the model. Model simulations suggest that the wetlands were a net sink for nitrogen, removing 21% of the total nitrogen originating from the landscape and entering the wetlands. Finally, in-stream and reservoir parameters were adjusted to achieve a reasonable agreement between simulated and observed in-stream TN concentrations (Figures 19 and 20). Parameters that were modified during this calibration process are provided in Appendix B.

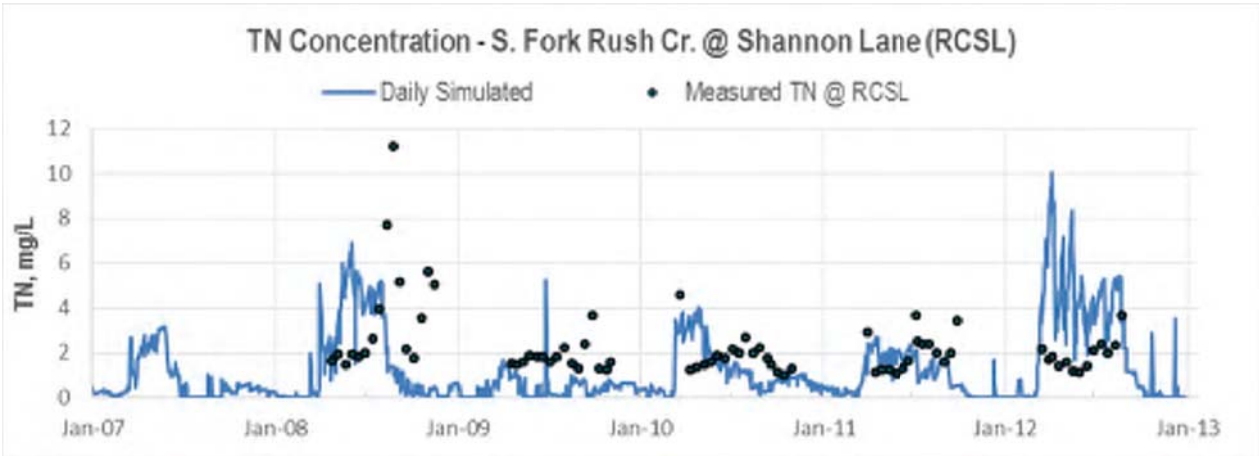

Figure 19. Simulated and observed TN concentrations at station RCSL (S. Fork Rush Creek @ Shannon Lane). Simulated values are plotted as five day moving averages.

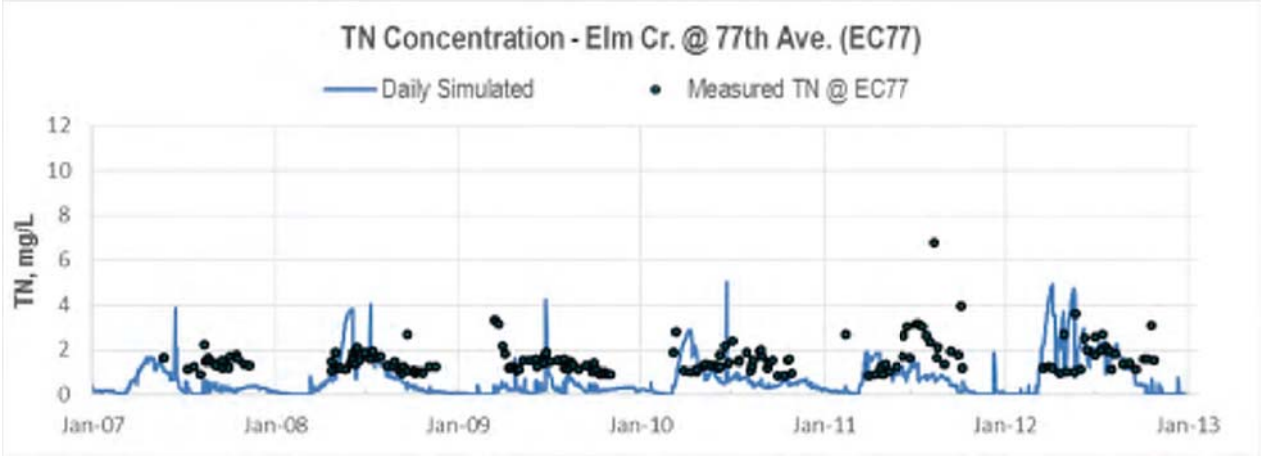

Figure 20. Simulated and observed TN concentrations at station EC77 (Elm Creek @ 77th Ave.). Simulated values are plotted as five day moving averages.

The model-simulated annual average (2000 – 2012) TN yield for the Elm Creek watershed is 1.95 lbs/acre/year at the outlet. This is comparable to the TN outlet yield of the Mississippi River – Twin Cities watershed which is between 3.3 and 5.0 lbs/acre/year (MPCA 2013). Annual TN loading simulated at the USGS gage varied between 7.5 and 137.4 tons per year (Figure 21). Simulated results suggest that the largest component of this load comes from the north and south branches of the Rush Creek, which drains the rural portion of the watershed that is characterized by the highest levels of agricultural activity.

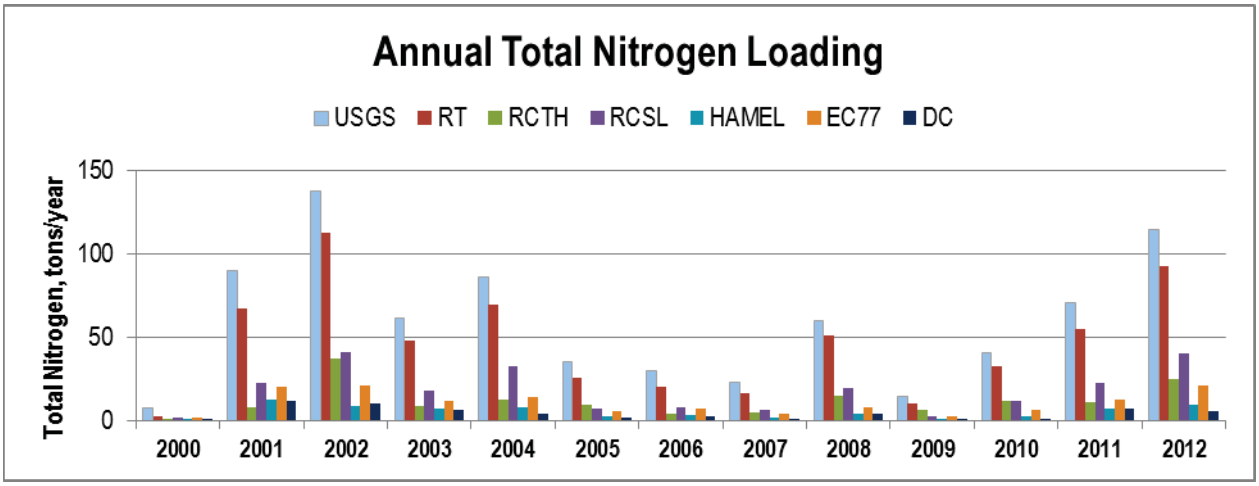

Figure 21. Simulated annual total nitrogen loads at select gages for years 2000 – 2012 in the Elm Creek watershed.

Monthly average TN loads are summarized in Figure 22. The average monthly TN load peaks in June. When averaged across all stations, roughly 84% of the annual nitrogen load occurs during the five months between March and July, during periods of spring runoff and early summer storms. A large majority of the model-simulated TN is in the form of nitrate (95% on average). Nitrate represents more than 75% of the TN loads for many of the major river basins in Minnesota (MPCA 2013). The hydrology of the Elm Creek Watershed results in a particularly high contribution of nitrate to the overall TN load because particulate organic forms of nitrogen have a high probability of being deposited as they are routed through the various wetland complexes and reservoirs present in the watershed.

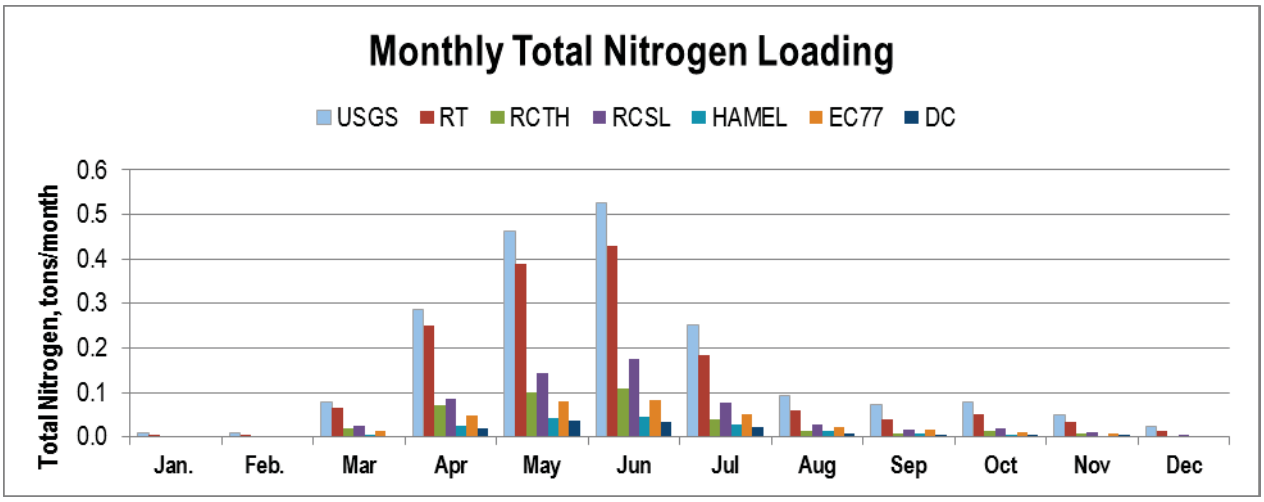

Figure 22. Simulated average monthly total nitrogen loading by station for the Elm Creek watershed (2000 – 2012).

Phosphorus

Upland phosphorus cycling and transport is an HRU level process in SWAT. The main components of the phosphorus cycle represented in SWAT include phosphorus stored in the soil matrix, phosphorus added in the form of manure or mineral fertilizer, phosphorus stored in live plant biomass and residue, and sediment-associated phosphorus buildup on impervious surfaces (Neitsch et al. 2011). SWAT model algorithms simulate the mineralization, decomposition, and immobilization processes that control the transformations of soil phosphorus. Other soil phosphorus processes simulated by SWAT include inorganic phosphorus sorption-desorption, leaching to groundwater, and surface runoff transport of soluble and sediment-bound phosphorus (both mineral and organic forms) (Neitsch et al. 2011). The cycling and transport of phosphorus in SWAT is determined by simulated hydrology, plant growth, and erosion processes. Phosphorus loads generated at the HRU level are aggregated to the subbasin level, routed through connected wetlands, and then added into the channel associated with the subbasin. Phosphorus fate and transport in the channel are computed based on instream kinetics adapted from the QUAL2E model.

The calibration approach for TP was similar to that described for sediment and TN – i.e., model-simulated upland UALs of TP for various land use types were evaluated to achieve consistency with the corresponding literature values. Model-predicted UALs for various land use types compared reasonably well with the literature values (Figure 23, Table 10). Croplands constitute the most significant source of TP in surface waters and generate higher phosphorus yields than other land types/uses in the watershed. Forested landscape is the least significant source of TP to the surface waters. Model-predicted TP yield from urban landscape tended to be close to the minimum values reported in the literature for this land use. The relatively low TP yield from the urban areas can be attributed to the specification of P-free fertilizer input in the model for urban HRUs. Minnesota began regulating the use of P-containing fertilizer on lawns and turf beginning in 2004. In recent years the use of lawn fertilizers without a phosphorus component has become a common practice. It is likely that the literature reported UALs reflect conditions before the legislative decisions regarding P-free lawn fertilizer came into effect.

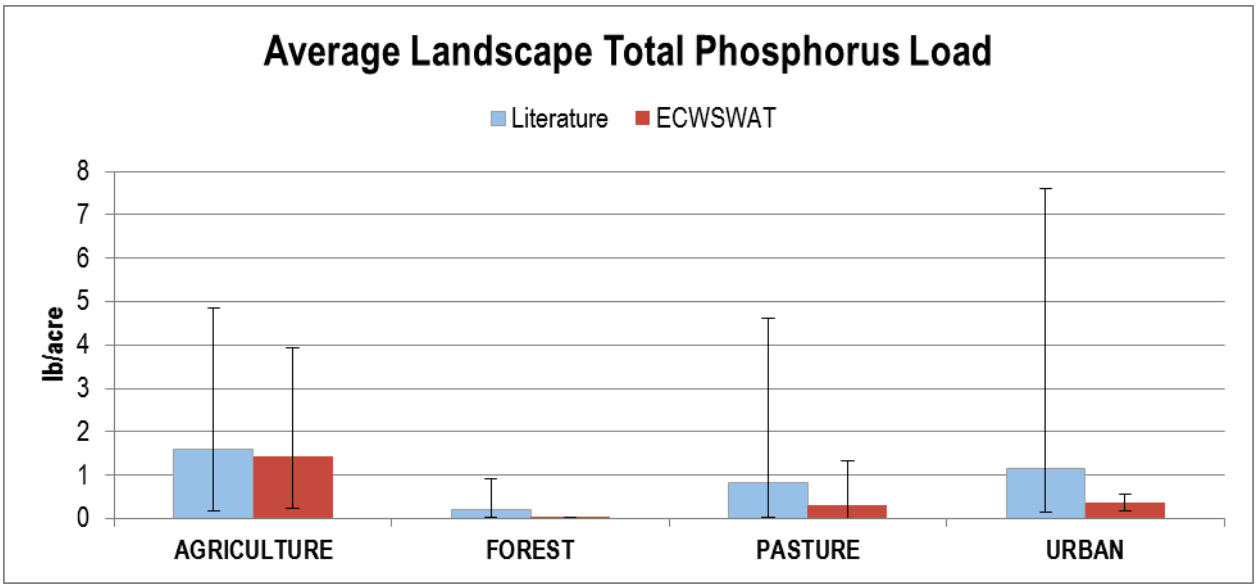

Figure 23. Average annual simulated landscape total phosphorus loading in the Elm Creek SWAT model as compared to literature values. Whiskers represent maximum/minimum values to quantify the literature and simulated ranges. Literature UALs were compiled from (CH2M Hill and AquaTerra Consultants 2002).

Table 10. Total phosphorus UALs from the calibrated Elm Creek SWAT model (2000 – 2012). Literature UALs were compiled from CH2M Hill and AquaTerra Consultants (2002).

	TP (lbs/acre/yr)		
Land Use Type	Literature Range	Literature Average	Elm Creek SWAT
Agriculture	0.2 - 4.9	1.6	1.4
Urban	0.15 - 7.6	1.2	0.4
Forest	0.01 - 0.9	0.2	0.01
Pasture	0.04 - 4.6	0.8	0.3

Among the various land use types, croplands export the most TP to surface waters in the Elm Creek watershed (Figure 24). A total of 56% of landscape TP comes from agricultural land areas. Pastured land areas contribute about 10% of total phosphorus landscape yields, while urban areas contribute 31% of TP. Forested and range areas contribute little phosphorus compared to the overall totals.

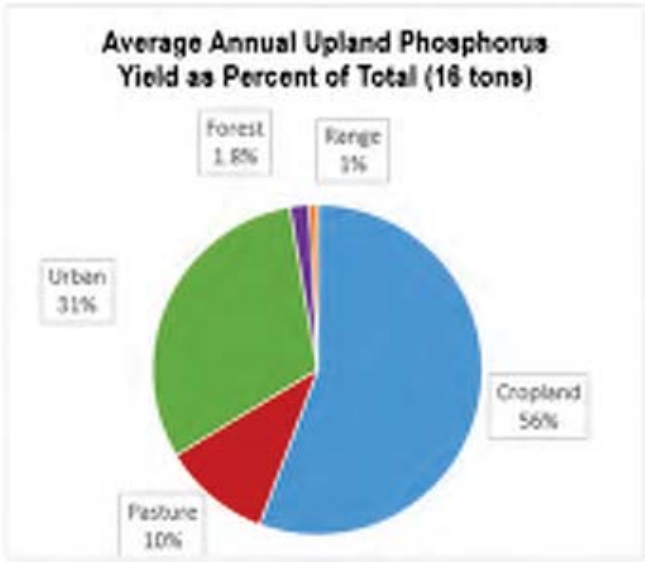

Figure 24. Average annual simulated phosphorus load (2000 – 2012) by land use types, estimated by SWAT model for the Elm Creek watershed.

The major forms of TP simulated by the SWAT model from upland landscape include soluble reactive phosphorus (SRP), particulate inorganic phosphorus and organic phosphorus. Prior to routing through the wetlands, model-simulated organic phosphorus constitutes approximately 80% of the TP. Particulate inorganic phosphorus, the form of inorganic phosphorus attached to sediment, accounts for 8% of TP. SRP represents the remaining 12% of TP.

Following calibration of the landscape TP loading wetlands, reservoirs and in-stream processes were activated in the model. Relevant model parameters were adjusted to achieve a reasonable agreement between simulated and observed in-stream TP concentrations. Modifications to the wetland parameters included specifying a SRP release rate during summer months (May through August). Wetlands behaved as a net source of SRP and a net sink for organic phosphorus. Parameters that were modified during this calibration process are provided in Appendix B. A comparison of the predicted and observed TP concentrations for the RCSL and EC77 monitoring stations are shown in Figures 25 and 26. The SWAT predicted in-stream TP concentrations are within the range of observed values, suggesting that the representation of TP delivery and transport in the model is reasonable for the Elm Creek Watershed.

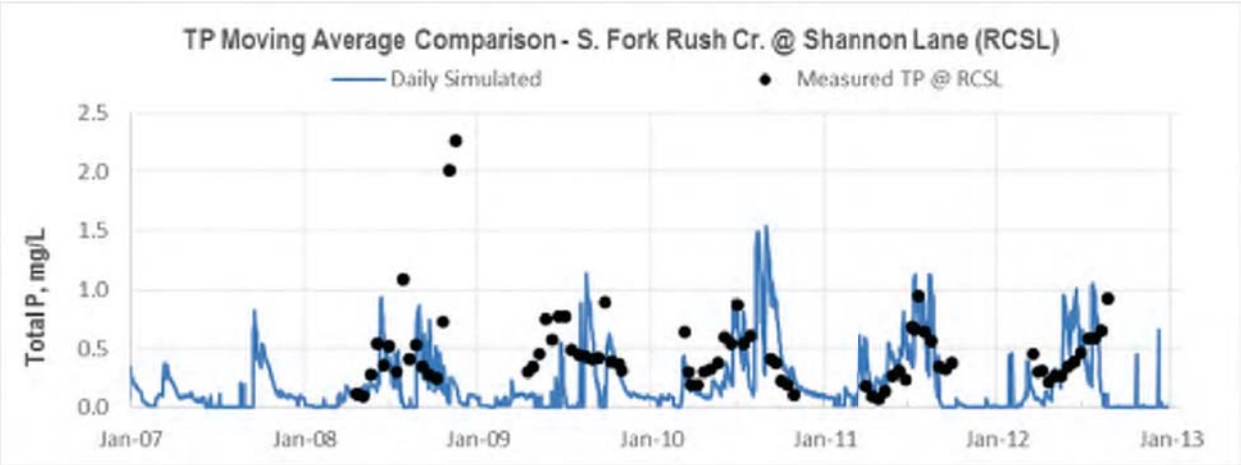

Figure 25. Simulated and observed TP concentrations at station RCSL (S. Fork Rush Creek @ Shannon Lane). Simulated values are plotted as five day moving averages.

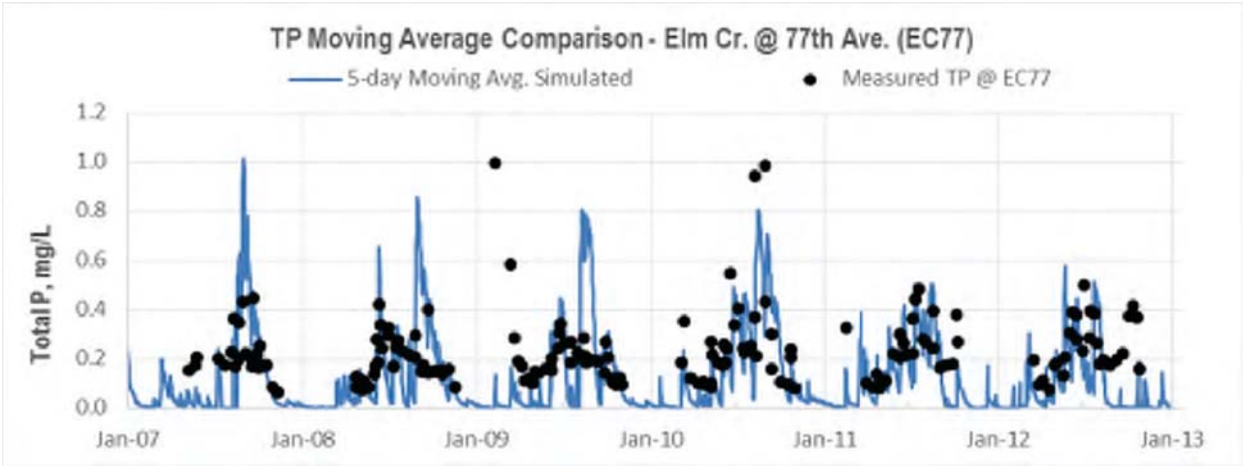

Figure 26. Simulated and observed TP concentrations at station EC77 (Elm Creek @ 77th Ave.). Simulated values are plotted as five day moving averages.

The simulated average annual TP yield at the watershed outlet for the simulation period (2000 - 2012) was 0.42 lbs/acre/year. This compares well with the range of 0.21 to 0.5 lbs/acre/year reported for the neighboring Bassett Creek watershed (MCES 2010). Annual TP loadings at the USGS gauge varied between 2 and 43 tons per year (Figure 27). Model results suggest that Rush Creek is a significant source of TP loads, with roughly equal amounts coming from the north and south branches.

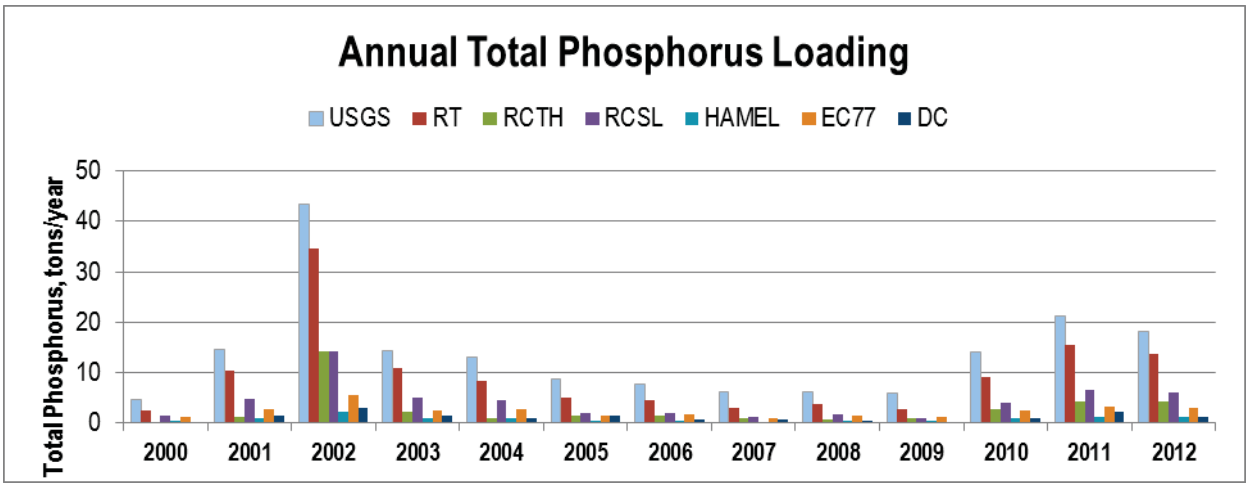

Figure 27. Simulated annual total phosphorus loads at select gages for years 2000 – 2012 in the Elm Creek watershed.

Model-simulated monthly average TP loads are summarized in Figure 28. TP loadings typically tend to peak in June. Roughly 66% of the total annual TP load occurs during the five months from March to July, likely due to large spring runoff events. A large majority of the model simulated in-stream TP loads are in the form of soluble reactive phosphorus (70% on average). Wetlands in the ECWSWAT model served as a net sink of organic P but a net source of SRP. Because wetlands were modeled as a net source of SRP, the proportion of SRP in TP is significantly higher in the in-stream loading (70%) relative to the landscape loading (12%). The model-simulated SRP proportion of TP in stream reaches is generally consistent with the measured data as SRP tends to comprise 57% of measured TP at station EC77 and 70% of measured TP at station RCSL.

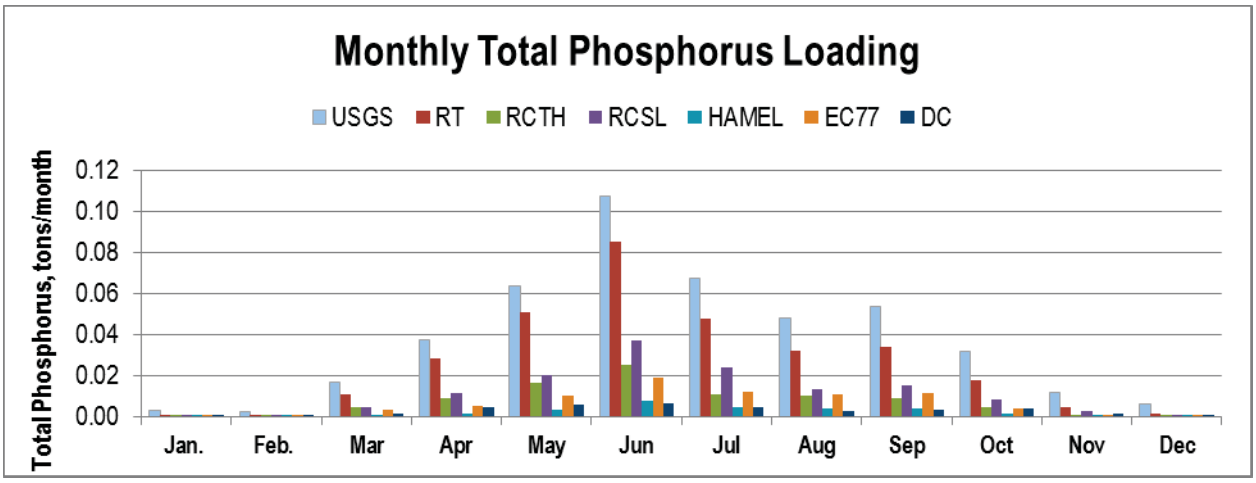

Figure 28. Simulated average monthly total phosphorus loading by station for the Elm Creek watershed (2000 – 2012).

Summary

This memorandum describes the development and calibration of a SWAT model for the Elm Creek Watershed. The ECWSWAT model was calibrated for hydrology, sediment, TP and TN. The hydrology calibration was performed using available streamflow monitored at several locations within the watershed. For sediments and nutrients the model calibration was performed with the primary objective of quantifying landscape loadings to the stream network. Sediment (as TSS) and nutrient calibrations were performed by comparing landscape loading of constituents to the available literature UALs associated with the various land use categories. As an additional check, SWAT-predicted in-stream concentrations of TSS, TP, and TN were compared to observed concentrations at various monitoring locations to ensure that the model reasonably represents wetland, channel, and reservoir source/sink and transport processes.

The model simulation of hydrology is in very good agreement with the observed streamflow conditions at eight monitoring locations within the watershed. The calibrated model also performed reasonably well in predicting loading rates of TSS, TN and TP expected from the various land use categories. Model simulations suggest that croplands are a significant contributor of TSS, TP and TN in the Elm Creek Watershed. Once the model predictions of landscape loadings were constrained, wetland and in-stream processes were activated and used to simulate delivery to reach outlets and the watershed outlet. The Elm Creek watershed had an estimated annual average (2000 – 2012) loading at the outlet of 0.017 tons/acre for TSS, 1.95 lbs TN/acre and 0.42 lbs TP/acre.

Limitations of the model calibrations are noted as follows. The primary focus of the sediment and nutrient calibration was to characterize the load contributions from the upland landscape. The ECWSWAT model performed reasonably well in predicting constituent loadings from the landscape. However, the sediment and nutrient calibrations were not constrained by observed data, but rather based on comparisons of model-predicted yields with available literature values. The literature UALs were compiled from various modeling studies representing a wide range of conditions. Therefore, the model-predicted landscape sediment and nutrient yields have some inherent uncertainty. The complex hydrologic interactions within the Elm Creek Watershed were represented in the ECWSWAT model using wetlands, reservoir and stream network features. In-stream processes were simulated and model-predicted constituent concentrations (TSS, TN, and TP) were compared with observed data as a cursory check. Model-predicted constituent concentrations were within the range of observed values.

Overall, the ECWSWAT model was able to simulate the hydrology and transport of pollutants under the land use systems, climate, hydrologic and physiographic settings of the Elm Creek Watershed. The model was able to reproduce temporal (i.e., annual, monthly and daily) variations in streamflow and unit area loadings of sediment and nutrient from landscape. Thus the performance of the ECWSWAT provides confidence that the model can be used to inform landscape loadings to lakes within the watershed and linked with other in-stream or lake models.

Some limitations with SWAT associated with process representations of wetlands, reservoirs and in-stream transport should be considered when applying the model or using the results to inform watershed management. SWAT provides a relatively simplified framework for wetland, reservoir and in-stream representation, and some of the important processes controlling sediment and nutrients delivery are not represented.

References

Bagnold, R.A. 1977. Bedload transport in natural rivers. Water Resources Research, Vol. 13, pp. 303-312.

Bierman, P., Rosen, C., Venterea, R., and Lamb J. 2011. Survey of Nitrogen Fertilizer Use on Corn in Minnesota. Department of Soil, Water and Climate, University of Minnesota, and USDA Agricultural Research Service. http://www.mda.state.mn.us/protecting/cleanwaterfund/~/media/C0D97703C7A84E74936431110A5FE897.ashx

CH2M Hill and AquaTerra Consultants. 2002. BASINS Training California Water Board. Technical Memorandum. Prepared for California State Water Resources Control Board. Prepared by CH2M Hill and AquaTerra Consultants. September 30, 2002.

Delin, G. N., and J. D. Falteisek. 2007. Ground-water recharge in Minnesota. USGS Fact Sheet 2007-3002.

Donigian, A.S. 2000. HSPF Training Workshop Handbook and CD. Lecture #19. Calibration and Verification Issues, Slide #L19-22. EPA Headquarters, Washington Information Center, 10-14 January, 2000. Presented and prepared for U.S. Environmental Protection Agency, Office of Water, Office of Science and Technology, Washington, D.C.

Donigian, A.S. 2002. Watershed Model Calibration and Validation: The HSPF Experience. Water Environment Federation (WEF) National TMDL Science and Policy 2002, November 13-16, 2002. Phoenix, AZ. WEF Specialty Conference Proceedings on CD-ROM.

Duda, P.B., Hummel, P.R., Donigian, A.S. and J.C. Imhoff. 2012. BASINS/HSPF: Model Use, Calibration, and Validation. American Society of Agricultural and Biological Engineers, Vol. 55, No. 4, pp. 523-1547.

ECWMC, 2003.Elm Creek Watershed Management Plan. Prepared by WSB & Associates, Inc. WSB Project No. 1334-00. Elm Creek Watershed Management Commission. April 2003. http://elmcreekwatershed.org/pages/ManagementPlan/

Fairbairn, 2011. Minnesota Water Supply and Availability. Minnesota Water Sustainability Framework. University of Minnesota Water Resources Center. January, 2011.

Folle, S.M. 2010. SWAT modeling of sediment, nutrient and pesticides in the Le Sueur River watershed, South-Central Minnesota. Ph.D. Dissertation. January, 2010.

LimnoTech, 2014. Little Cannon River Watershed SWAT modeling. Task 1 – Complete the construction, construction, calibration and confirmation of the SWAT model. Memorandum prepared for the Minnesota Pollution Control Agency. June 20, 2014. LimnTech, Ann Arbor.

MCES, 2010. Annual Stream Water Quality Assessment Report. Metropolitan Council Environmental Services. http://www.metrocouncil.org/getattachment/8a9cc8ee-587d-4697-aa30-60d4a0353cd3/.aspx

Moriasi, D.N., Arnold, J.G., Van Liew, M.W., Bingner, R.L., Harmel, R.D. and T.L. Veith. 2007. Model evaluation guidelines for systematic quantification of accuracy in watershed simulations. Transactions of the American Society of Agricultural and Biological Engineers (ASABE), Vol. 50, No. 3, pp. 885-900.MPCA, 2011. Cannon River Watershed Management Strategy 2011 – 2015. Chapter 11: Lower Cannon River Lobe Management and Monitoring Strategy. June 30, 2011. Minnesota Pollution Control Agency, St. Paul, MN.

MPCA, 2013. Nitrogen in Minnesota Surface Waters, Conditions, Trends, Sources, and Reductions. Minnesota Pollution Control Agency, St. Paul, MN.

Neitsch, S.L., Arnold, J.G., Kiniry, J.R. and J.R. Williams. 2011. Soil and Water Assessment Tool, Theoretical Documentation, Version 2009. Grassland, Soil and Water Research Laboratory, Agricultural Research Services, TX and Blackland Research Center, Agricultural Experiment Station, TX. September 2011.

Parajuli, P.B., Nelson, N.O., Frees, L.D. and K.R. Mankin. 2009, Comparison of AnnAGNPS and SWAT model simulation results in USDA-CEAP agricultural watersheds in south-central Kansas. Hydrological Processes. Vol. 23, pp. 748- 763.

TetraTech, 2013. Root River Model Calibration. Prepared for USEPA Region 5 and Minnesota Pollution Control Agency, Rochester. April 10, 2013. TetraTech, Research Triangle Park, NC 27709.

Williams, J.R. 1995. Chapter 25: The EPIC model. p. 909-1000. In V.P. Singh (ed). Computer models of watershed hydrology. Water Resources Publications, Highlands Ranch, CO.

Williams, J.R. 1975. Sediment routing for agricultural watersheds. Water Resources Bulletin, Vol. 11, No. 5, pp. 965-974.

Appendix A
SWAT Wetland Configuration

Table A-1. Summary of information used to represent wetlands in each subbasin in the ECWSWAT model.

Subbasin	Municipality	Subbasin Category	Subbasin Area (acre)	Wetland Area (acre)	Drainage Area Fraction[6]
1	Maple Grove/Plymouth	Urban	1003	147	0.50
2	Plymouth	Urban	63	0	0.00
3	Corcoran/Maple Grove	Rural	273	84	1.00
4	Corcoran/Maple Grove	Rural	554	62.3	0.90
5	Rogers	Rural	827	54.7	1.00
6	Rogers	Rural	335	79.5	1.00
7	Dayton	Rural	1053	184.5	1.00
8	Dayton	Rural	22	1.2	1.00
9	Dayton	Rural	493	19	1.00
10	Dayton	Rural	83	0	1.00
11	Maple Grove	Rural	350	118.3	1.00
12	Maple Grove	Urban	328	40.5	0.87
13	Maple Grove	Urban	44	21.5	0.33
14	Maple Grove	Urban	547	59.5	0.91
15	Maple Grove	Urban	2204	156.1	0.83
16	Maple Grove	Rural	165	34	1.00
17	Maple Grove/Plymouth	Urban	1113	15.4	0.53
18	Maple Grove	Urban	283	9.1	0.71
19	Maple Grove/Plymouth/Medina/Corcoran	Urban	849	8.9	0.13
20	Plymouth/Medina	Urban	1687	136.3	0.60
21	Maple Grove	Urban	723	142.5	0.68
22	Maple Grove	Urban	921	24.9	0.22
23	Plymouth/Maple Grove	Urban	1622	145.9	0.57
24	Maple Grove	Urban	128	13.2	0.80
25	Dayton/Rogers	Rural	693	145.6	1.00

[6] Drainage area fraction represents fraction of SWAT subbbasin area draining through the wetlands. For SWMP ponds, drainage area information was provided by TRPD. When representing in-channel NWI wetlands, it was assumed that the entire subbasin drains through the wetland (i.e., Drainage area fraction = 1).

Subbasin	Municipality	Subbasin Category	Subbasin Area (acre)	Wetland Area (acre)	Drainage Area Fraction[6]
26	Dayton	Rural	722	152.5	1.00
27	Dayton/Champlin/Maple Grove	Urban/Rural	227	14	0.45
28	Rogers/Dayton	Urban/Rural	2077	545.5	1.00
29	Medina	Rural	720	57.3	1.00
30	Medina	Rural	1693	69.3	1.00
31	Medina	Rural	1858	337.8	1.00
32	Dayton	Rural	368	109.2	1.00
33	Dayton/Champlin	Urban/Rural	1542	391	1.00
34	Corcoran	Rural	1913	152.3	1.00
35	Maple Grove/Dayton	Rural	133	48.7	0.60
36	Maple Grove	Urban	21	2.5	0.56
37	Maple Grove	Urban	187	10.3	0.87
38	Corcoran/Medina	Rural	1025	123.4	1.00
39	Maple Grove	Urban	329	6.3	0.77
40	Champlin	Urban	834	30.6	0.69
41	Maple Grove	Rural	25	5.1	1.00
42	Maple Grove/Dayton	Urban	943	49.6	0.59
43	Dayton	Rural	209	32	1.00
44	Dayton	Rural	634	23.5	0.50
45	Maple Grove/Dayton	Rural	647	47.6	1.00
46	Roger/Dayton/Maple Grove/Corcoran	Rural	2040	166.3	1.00
47	Maple Grove/Dayton	Rural	170	4.8	1.00
48	Rogers/Corcoran	Rural	1482	99	1.00
49	Rogers	Rural	1900	146.8	1.00
50	Corcoran	Rural	2554	129.2	1.00
51	Corcoran/Rogers	Rural	879	58	1.00
52	Corcoran/Maple Grove	Urban/Rural	1242	160.7	0.87
53	Corcoran	Rural	482	77.9	1.00
54	Corcoran/Medina	Rural	2910	421.7	1.00
55	Corcoran	Rural	232	50	1.00
56	Corcoran	Rural	1423	75.5	1.00
57	Corcoran	Rural	1364	235.6	1.00
58	Corcoran/Medina	Rural	1567	227.6	1.00
59	Corcoran	Rural	75	22.2	1.00
60	Corcoran/Rogers	Rural	520	147.7	1.00
61	Corcoran	Rural	1293	68	1.00
62	Corcoran/Greenfield	Rural	3524	253.1	1.00
63	Maple Grove	Urban	14	6.4	0.54

Subbasin	Municipality	Subbasin Category	Subbasin Area (acre)	Wetland Area (acre)	Drainage Area Fraction[6]
64	Maple Grove/Dayton	Urban	2063	136.4	0.34
65	Maple Grove/Corcoran	Urban/Rural	1638	217.4	1.00
66	Corcoran	Rural	183	57.2	1.00
67	Dayton	Rural	817	118.4	1.00
68	Maple Grove	Urban	70	12.4	0.82
69	Champlin/Maple Grove	Rural	328	42.7	1.00
70	Maple Grove	Urban	234	38.4	0.79
71	Maple Grove	Urban	348	8	0.37
72	Dayton	Rural	1320	35.9	1.00
73	Dayton	Rural	92	7	1.00
74	Dayton	Rural	118	45.8	1.00
75	Maple Grove	Urban	1233	187.4	0.85
76	Champlin	Urban	754	49.3	0.74
77	Champlin	Urban	258	6.9	0.97

Appendix B
Model Calibration Parameterization

Table B-1. Elm Creek watershed SWAT model hydrology parameters – summary of calibrated values.

Parameter Name	Description	Initial Value(s)	Calibrated Value(s)
IPET.bsn	Potential evapotranspiration method	1	0
SURLAG.bsn	Surface runoff lag coefficient	4	0.8
DEPIMP_BSN.bsn	Depth to impervious layer – basin wide (mm)	0	6000
SMFMX.bsn	Melt factor on June 21st (mm H_2O/°C-day)	4.5	3
SMTMP.bsn	Snow melt base temperature (°C)	0.5	2.3
TIMP.bsn	Snow pack temperature lag factor	1	0.3
IRTE.bsn	Channel water routing method	0	0
WET_MXVOL.pnd	Volume of water stored in wetlands when filled to maximum water level (10^4 m^3 H_2O)	WET_NVOL	WET_NVOL * 1.20
GW_REVAP.gw	Groundwater "revap" coefficient	0.02	0.1
ALPHA_BF.gw	Baseflow alpha factor (days)	0.048	0.1
GW_DELAY.gw	Groundwater delay time (days) for aquifer recharge	31	30
RCHRG_DP.gw	Deep aquifer percolation fraction	0.05	0.4
ESCO.hru	Soil evaporation compensation factor	0.95	All urban HRUs = 0.75
DEP_IMP.hru	Depth to impervious layer (mm)	0	Drained HRUs = 1200
CNOP.mgt2	Operation specific SCS runoff curve number for moisture condition II	*varies* (30-94)	Original * 0.70[7]
DDRAIN.mgt1	Depth to the subsurface drain (mm)	0	Drained HRUs = 1000
TDRAIN.mgt1	Time to drain soil to field capacity (hours)	0	Drained HRUs = 24
GDRAIN.mgt1	Drain tile lag time (hours)	0	Drained HRUs = 96
NDTARGR.res	Number of days to reach target storage from current reservoir storage.	1	4

[7] Minimum values of 30 and 39 were set for forested and pastured HRUs, respectively. Urban CNOP values were not modified.

Table B-2. Elm Creek watershed SWAT model sediment parameters – summary of calibrated values.

Parameter Name	Description	Initial Value(s)	Calibrated Value(s)
ADJ_PKR	Peak rate adjustment factor for sediment routing in the subbasin	1	0.5
SPCON	Linear parameter for calculating sediment reentrained in channel sediment routing	0.0001	0.001
RES_STLR_CO.bsn	Reservoir settling coefficient	0.184	0.09
USLE_P	USLE equation support practice factor	1	0.6 in agricultural HRUs only
LAI_INIT.mgt	Initial leaf area index	0	0.75 for forest HRUs only
BIO_INIT.mgt	Initial dry weight biomass (kg/ha)	0	33,840 for forest HRUs only
USLE_C[8]	Minimum factor of USLE C factor for water erosion applicable to the land cover/plant	*Varies*	FRSD to .01, ALFA = 0.04, PAST = 0.02
MAT_YRS[9]	Number of years required for tree species to reach full development (years)	10	0
FIMP[10]	Fraction total impervious area in urban land type - both directed and indirectly connected	0.98	Urban-Transportation = 0.6
FCIMP[11]	Fraction directly connected impervious area in urban land type	0.95	Urban-Transportation = 0.44
WET_SED.pnd	Initial sediment concentration in wetland water (mg/L)	0	5
WET_NSED.pnd	Equilibrium sediment concentration in wetland water (mg/L)	0	Subbasins draining to RCSL, RT, & RCTH = 1.0, All others = 5.0
SECCIR.res	Water clarity coefficient for the reservoir	1	1
RES_NSED.res	Equilibrium sediment concentration in reservoir water (mg/L)	0	10
RES_D50.res	Median particle diameter of sediment (μm)	10	5
CH_COV1.rte	Channel erodibility factor or bank vegetation coefficient	0	0.08
CH_COV2.rte	Channel cover factor or bed vegetation coefficient	0	0.08

[8] This parameter located in file crop.dat
[9] This parameter located in file crop.dat
[10] This parameter located in file urban.dat
[11] This parameter located in file urban.dat

Table B-3. Elm Creek watershed SWAT model nutrient parameters– summary of calibrated values.

Parameter Name	Description	Initial Value(s)	Calibrated Value(s)
ISUBWQ.bsn	Subbasin water quality code	0	0
CDN.bsn	Denitrification exponential rate coefficient	1.4	0.9
SDNCO.bsn	Denitrification threshold water content	1.1	1
IWQ.bsn	In-stream water quality code	0	1
FIXCO.bsn	Nitrogen fixation coefficient	0.5	0.35
N_UPDIS.bsn	Nitrogen uptake distribution parameter	20	25
P_UPDIS.bsn	Phosphorus uptake distribution parameter	20	9
NPERCO.bsn	Nitrate percolation coefficient	0.2	0.5
PPERCO.bsn	Phosphorus percolation coefficient	10	17.5
PHOSKD.bsn	Phosphorus soil partitioning coefficient (m3/Mg)	175	95
PSP.bsn	Phosphorus availability index	0.4	0.6
RS2.swq	Benthic source rate for dissolved phosphorus in the reach at 20°C (mg/m^2/day)	0.05	0.01
RS3.swq	Benthic source rate for NH4-N in the reach at 20°C (mg/m^2/day)	0.5	0.01
RS5.swq	Organic phosphorus settling rate in the reach at 20°C (day^{-1})	0.05	0.04
BC3.swq	Rate constant for hydrolysis of organic N to NH4 in the reach at 20°C (day^{-1})	0.21	0.03
BC4.swq	Rate constant for mineralization of organic P to dissolved P in the reach at 20°C (day^{-1})	0.35	Subbasins draining to EC77 & HAMEL = 0.001, All others = 0.05
ERORGN.hru	Organic N enrichment ratio for loading with sediment	model calculated	3 for urban, 1.5 for croplands, 1.0 for pasture
ERORGP.hru	Organic P enrichment ratio for loading with sediment	model calculated	3 for urban & pasture, 2.3 for croplands
IPND1.pnd	Beginning month of mid-year nutrient settling season	1	5
IPND2.pnd	Ending month of mid-year nutrient settling season	1	8
PSETLW1.pnd	Phosphorus settling rate in wetlands for months IPND1 through IPND2 (m/year)	5	0.01
PSETLW2.pnd	Phosphorus settling rate in wetlands for months other than INPD1-IPND2 (m/year)	5	7
NSETLW1.pnd	Nitrogen settling rate in wetlands for months IPND1 through IPND2 (m/year)	4.7	Subbasins draining to RCSL & RT = 12.0, draining to RCTH = 15.0, All others = 2.0
NSETLW2.pnd	Nitrogen settling rate in wetlands for months other than INPD1-IPND2 (m/year)	4.7	Subbasins draining to RCSL & RT = 90.0, draining to RCTH = 95.0, All others = 10.0
PND_D50.pnd	Wetland source rate of soluble phosphorus for months IPND1 through IPND2 (mg/m^2/day) ***Definition specific to this project***	0	Subbasins draining to EC77 & HAMEL = 8.0, All others = 12.0

Appendix C
Additional Calibration Figures

Annual Scatter Plots

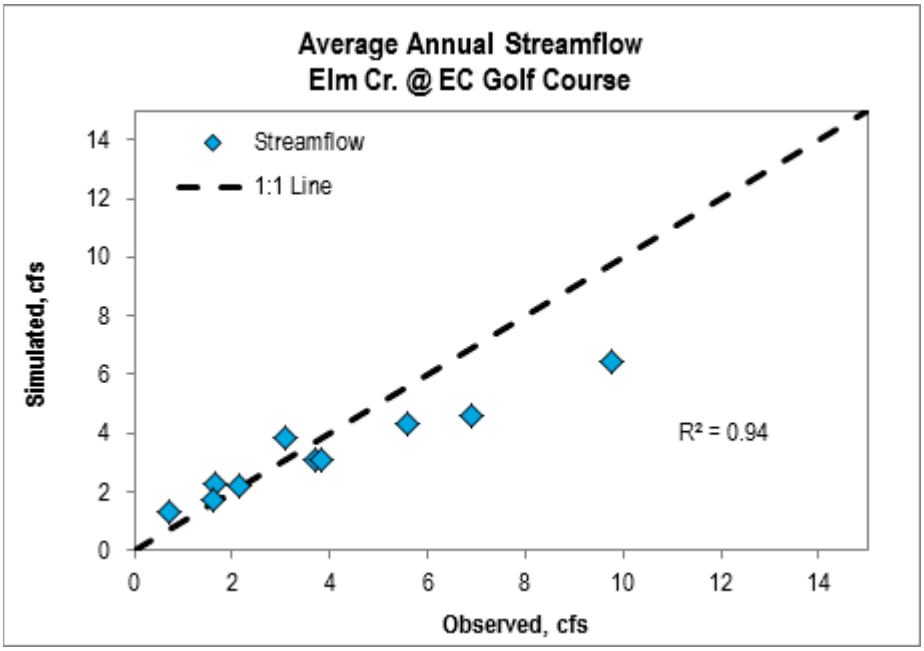

Figure C-1. A 1:1 plot of the annual simulated and observed streamflow at calibration site HAMEL (Elm Creek at the Elm Creek Golf Course) over select years from 2000-2012.

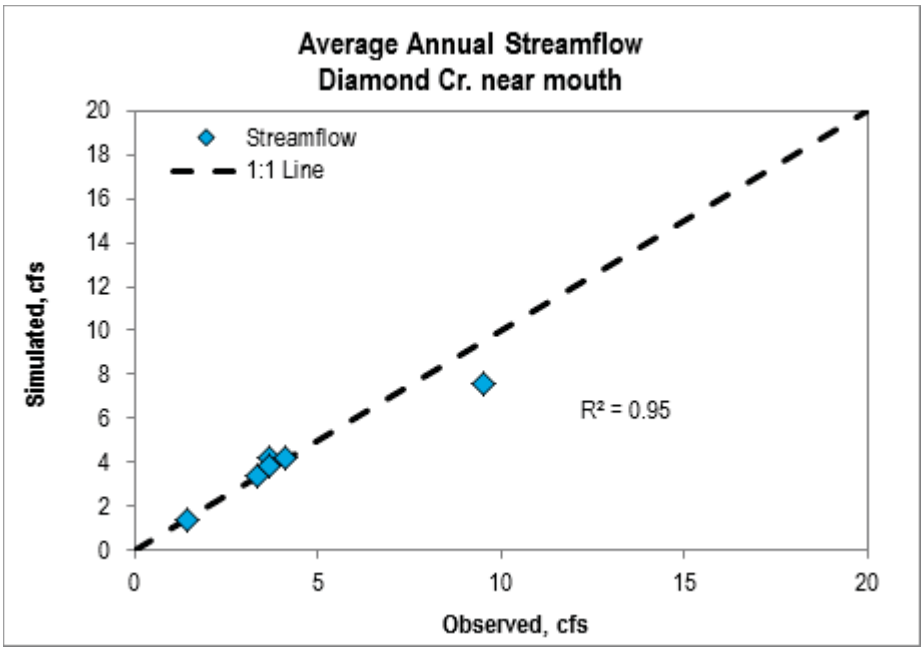

Figure C-2. A 1:1 plot of the annual simulated and observed streamflow at calibration site DC (Diamond Creek near mouth) for years 2007-2012.

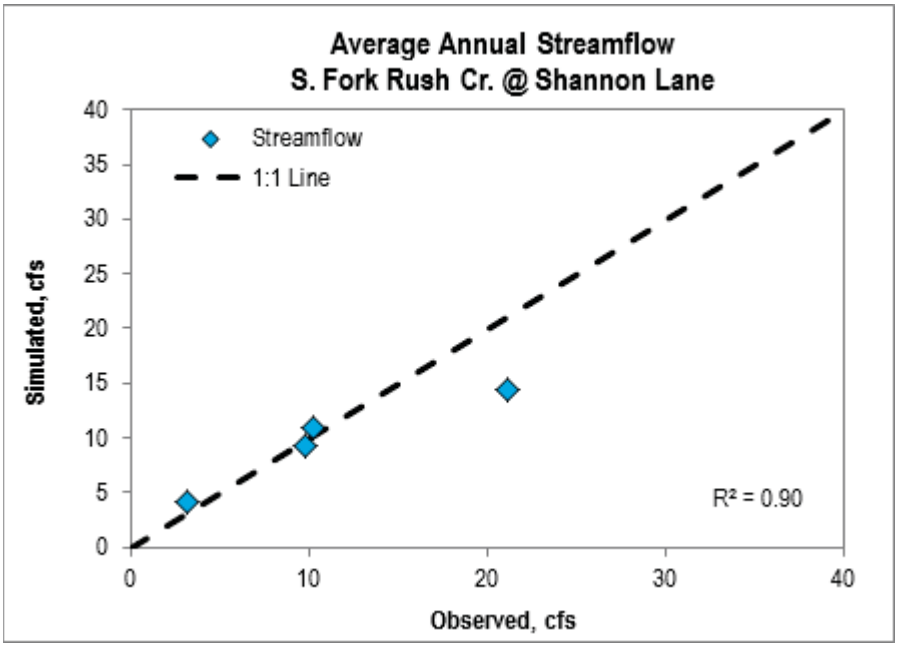

Figure C-3. A 1:1 plot of the annual simulated and observed streamflow at calibration site RCSL (S. Fork Rush Creek @ Shannon Lane) for years 2000-2012.

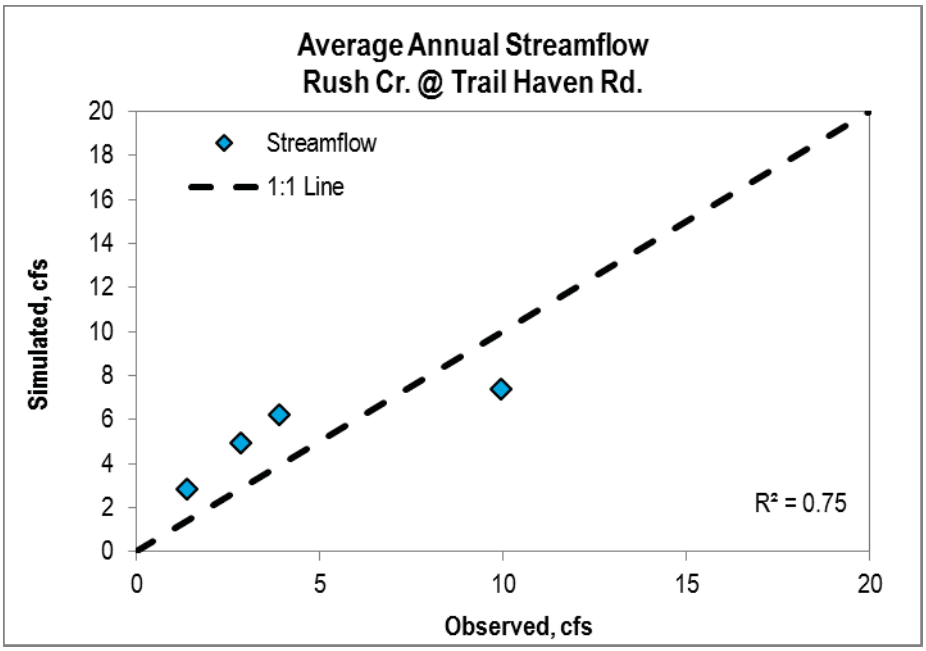

Figure C-4. A 1:1 plot of the annual simulated and observed streamflow at calibration site RCTH (Rush Creek @ Trail Haven Rd.) for years 2000 – 2012.

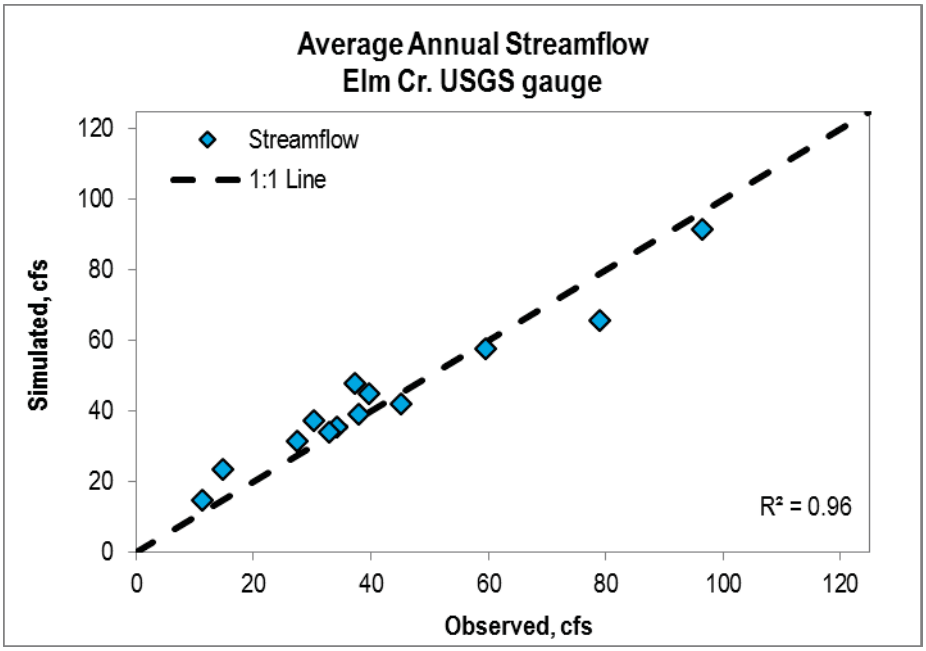

Figure C-5. A 1:1 plot of the annual simulated and observed streamflow at confirmation site USGS (Elm Creek USGS gauge) for years 2000-2012.

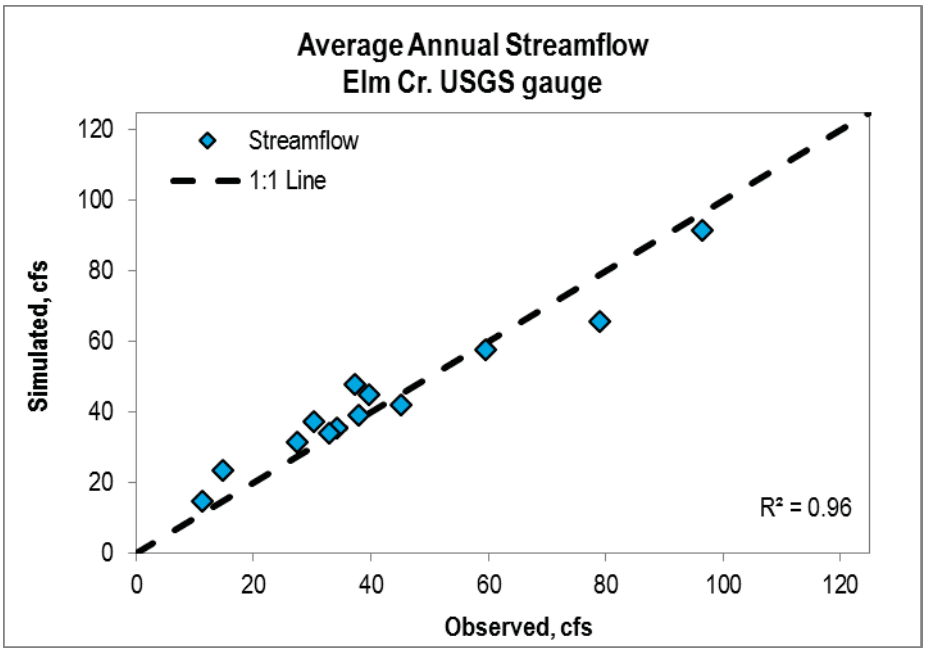

Figure C-6. A 1:1 plot of the annual simulated and observed streamflow at confirmation site EC77 (Elm Creek @ 77th Ave.) for years 2000-2012.

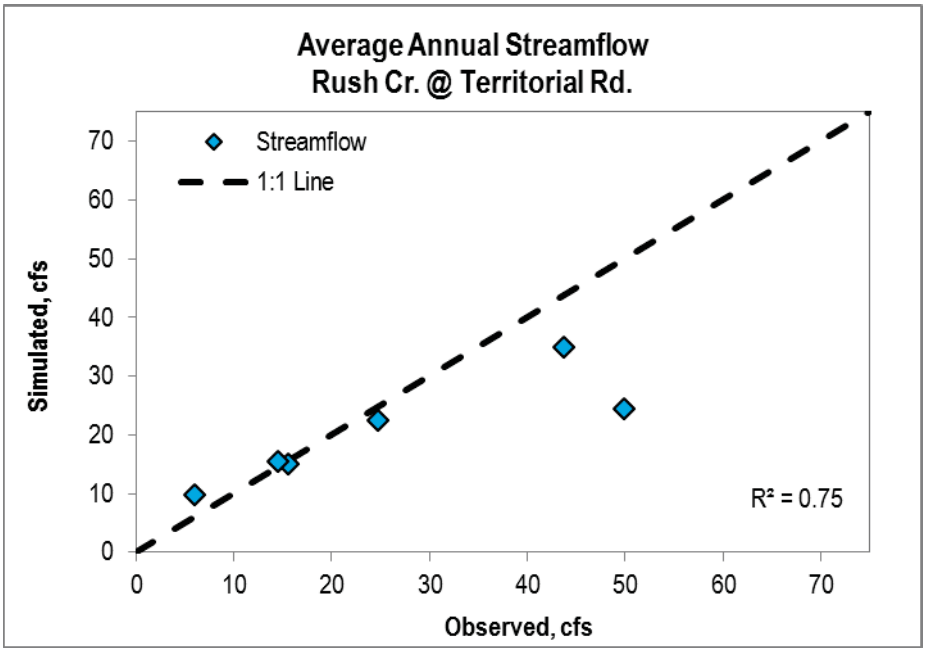

Figure C-7. A 1:1 plot of the annual simulated and observed streamflow at confirmation site RT (Rush Creek @ Territorial Rd.) for years 2000-2012.

Additional Monthly Scatter Plots

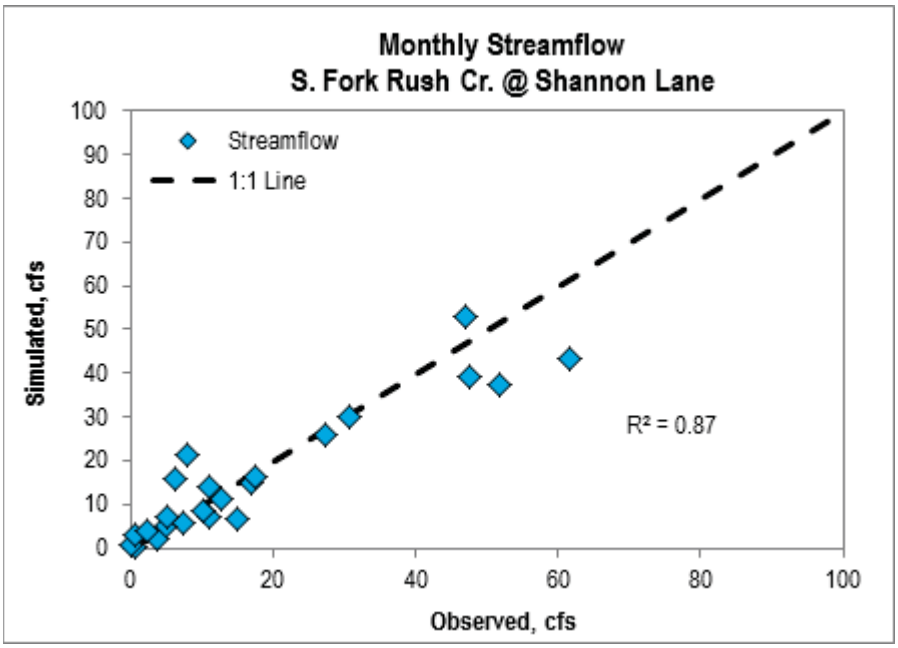

Figure C-8. A 1:1 plot of the monthly simulated and observed streamflow at calibration site RSCL (S. Fork Rush Creek @ Shannon Lane) for years 2000-2012.

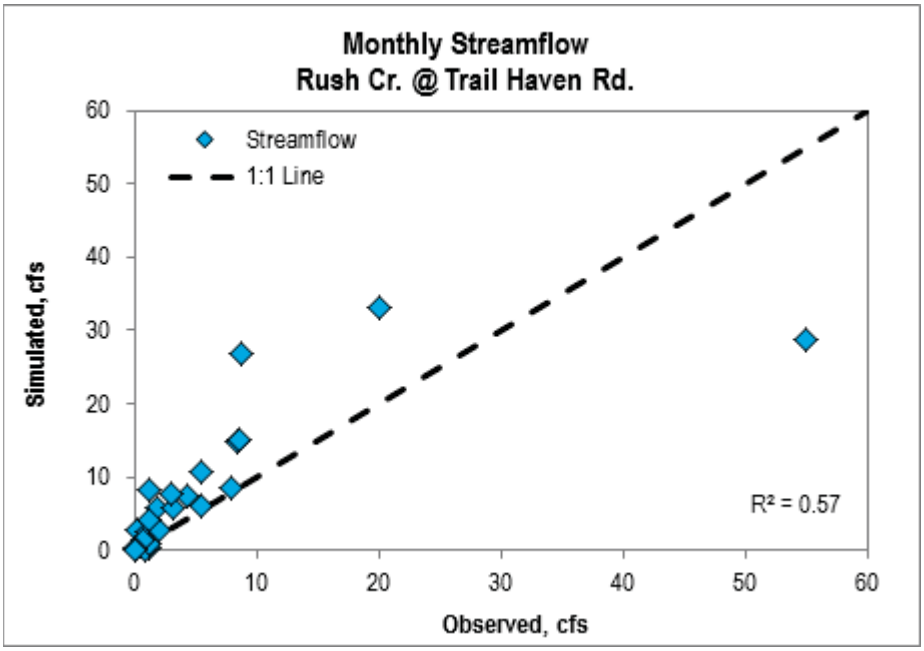

Figure C-9. A 1:1 plot of the monthly simulated and observed streamflow at calibration site RCTH (Rush Creek @ Trail Haven Rd.) for years 2000-2012.

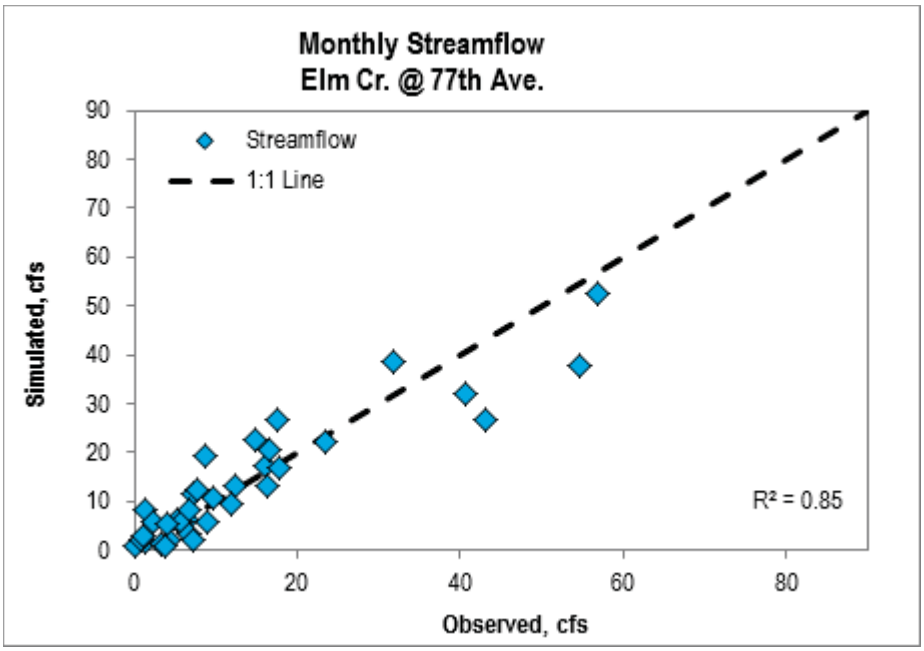

Figure C-10. A 1:1 plot of the monthly simulated and observed streamflow at confirmation site EC77 (Elm Creek @ 77th Ave.) for years 2000-2012.

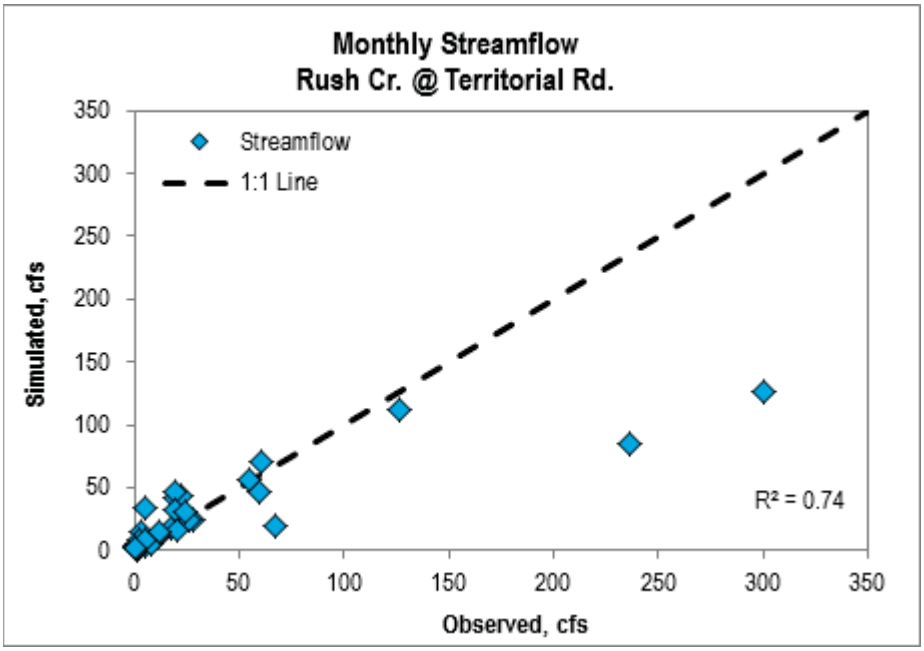

Figure C-11. A 1:1 plot of the monthly simulated and observed streamflow at confirmation site RT (Rush Creek @ Territorial Rd.) for years 2000-2012.

Additional Monthly Time Series Plots

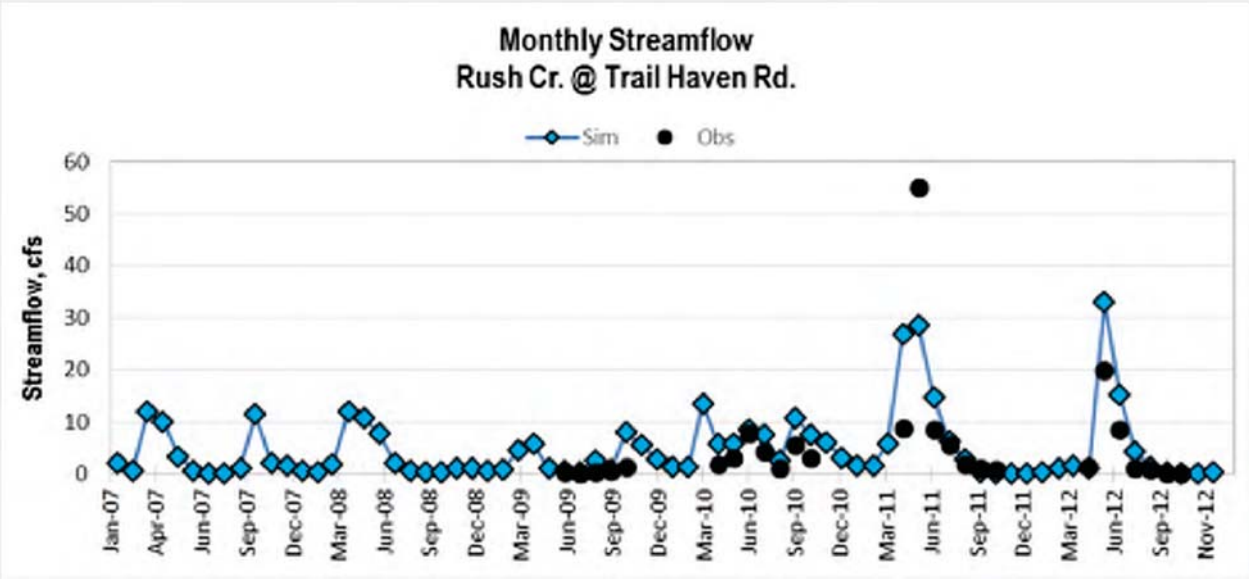

Figure C-12. Monthly average simulated and observed streamflow at calibration site RCTH (Rush Creek @ Trail Haven Rd.) for years 2007-2012.

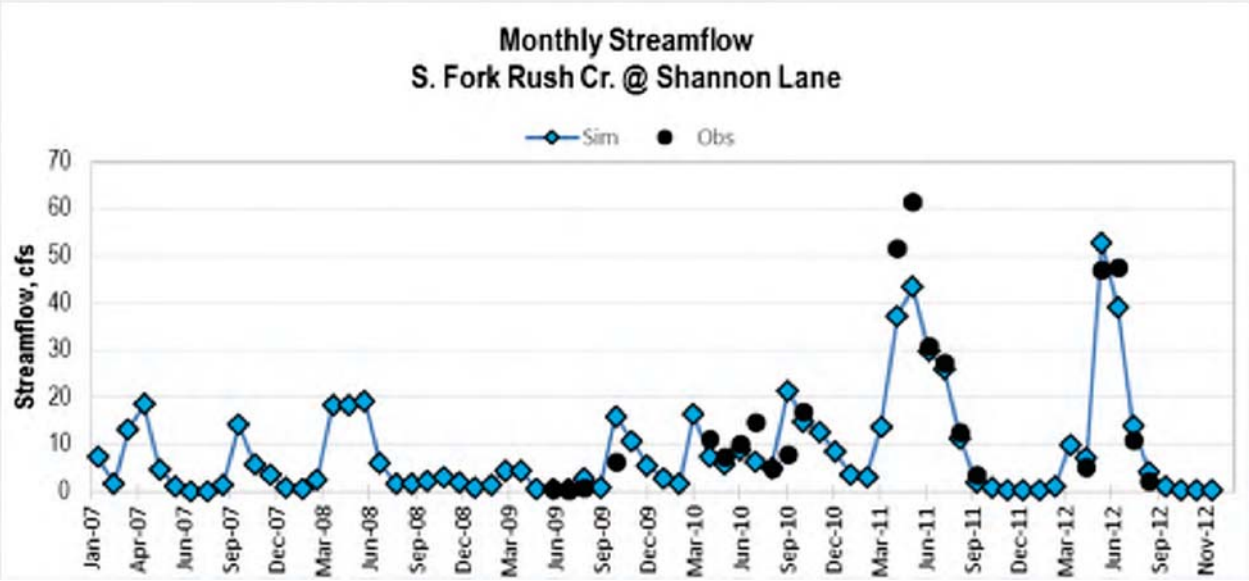

Figure C-13. Monthly average simulated and observed streamflow at calibration site RCSL (S. Fork Rush Creek @ Shannon Lane) for years 2007-2012.

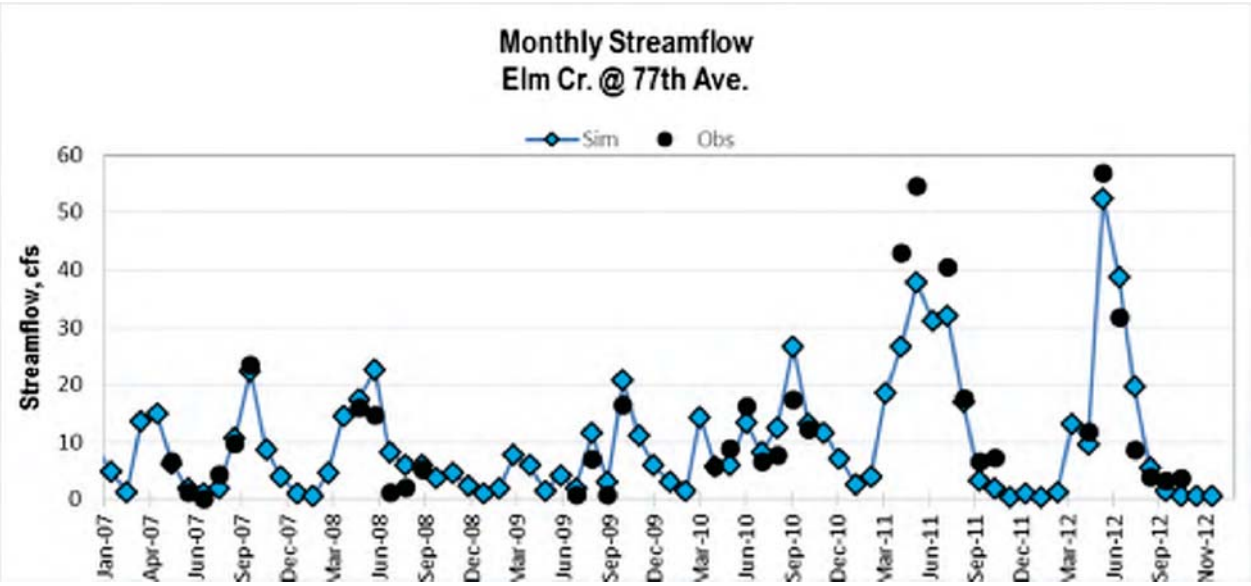

Figure C-14. Monthly average simulated and observed streamflow at confirmation site EC77 (Elm Creek @ 77th Ave.) for years 2007-2012.

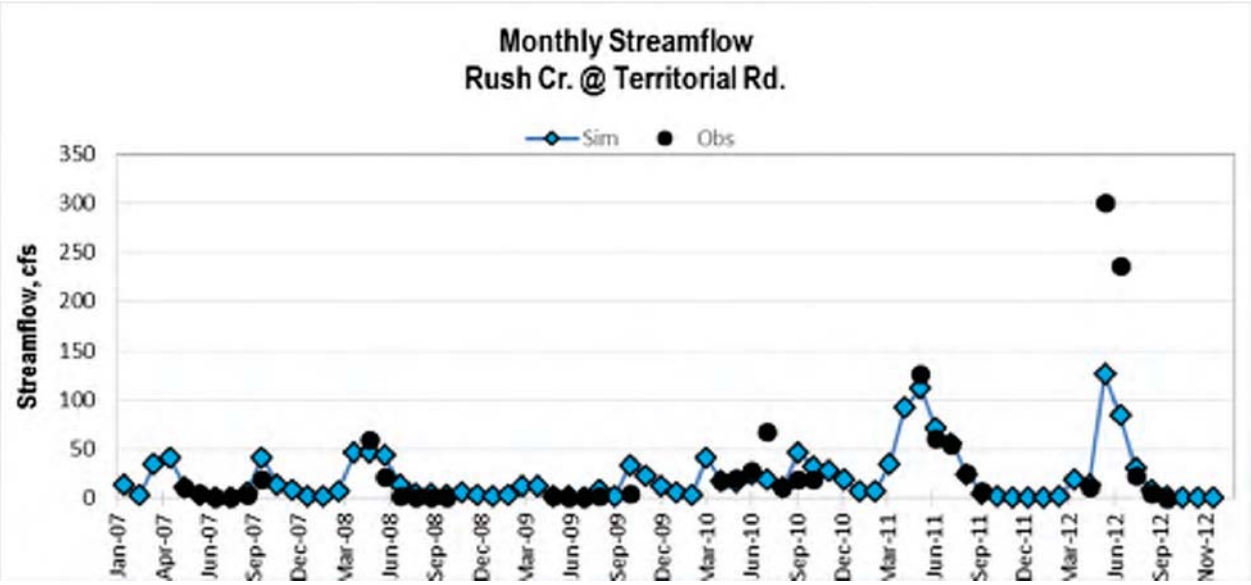

Figure C-15. Monthly average simulated and observed streamflow at confirmation site RT (Rush Creek @ Territorial Rd.) for years 2007-2012.

Additional Daily Time Series Plots

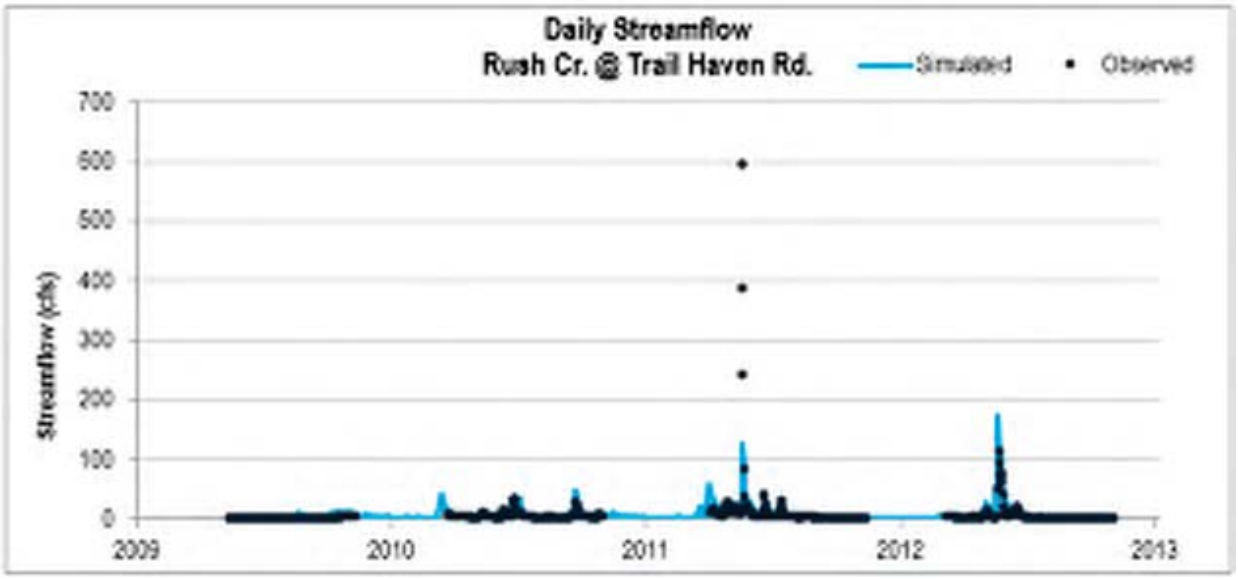

Figure C-16. Daily average simulated and observed streamflow at calibration site RCTH (Rush Creek @ Trail Haven Rd.) for years 2009-2012.

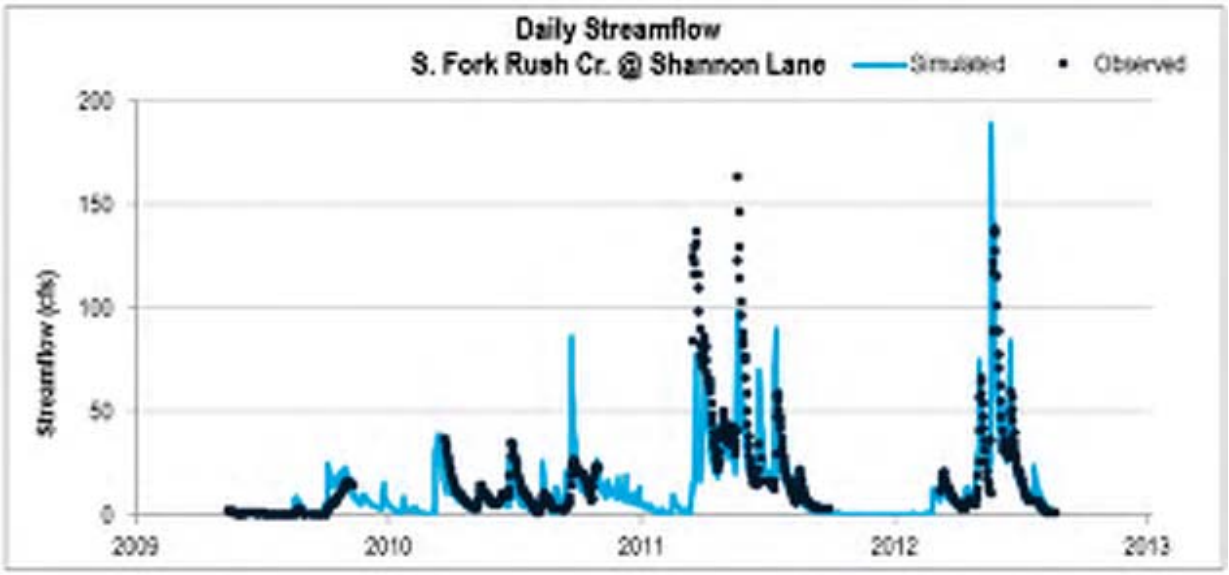

Figure C-17. Daily average simulated and observed streamflow at calibration site RCSL (S. Fork Rush Creek @ Shannon Lane) for years 2009-2012.

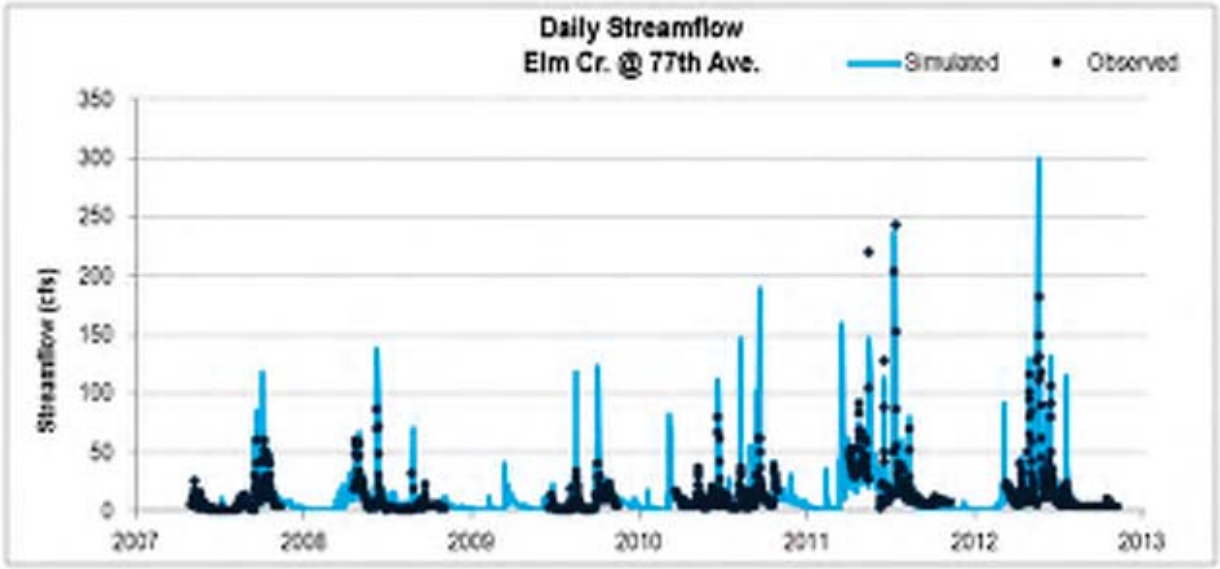

Figure C-18. Daily average simulated and observed streamflow at confirmation site EC77 (Elm Creek @ 77th Ave.) for years 2007-2012.

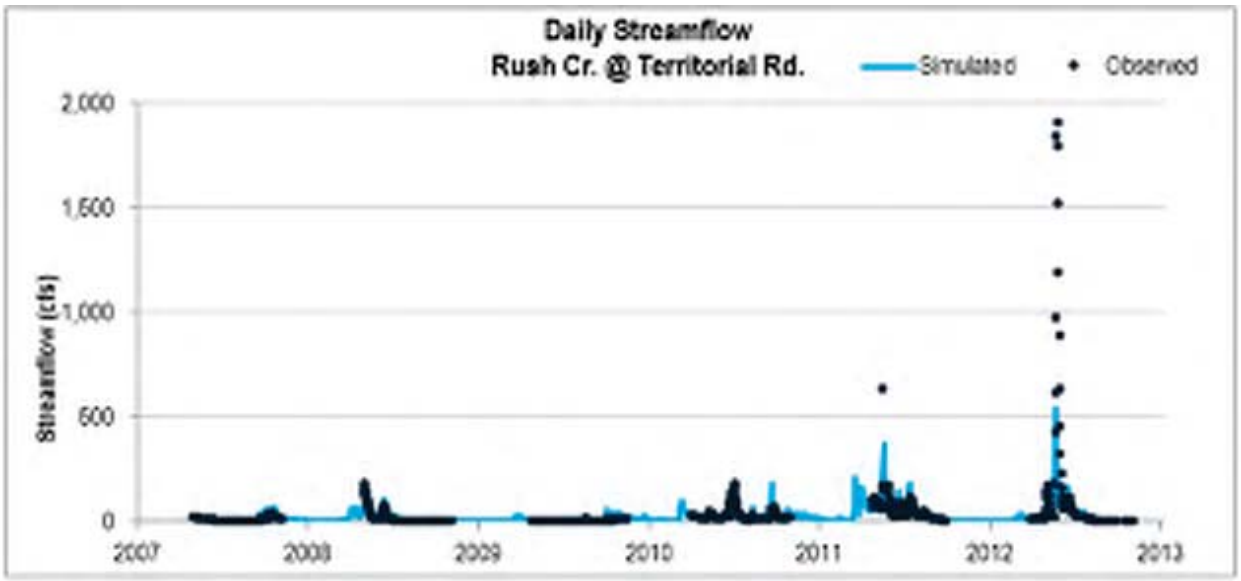

Figure C-19. Daily average simulated and observed streamflow at confirmation site RT (Rush Creek @ Territorial Rd.) for years 2007-2012.

Appendix E
Aquatic Vegetation Surveys for Lakes within the Elm Creek Watershed

Fish Lake									
Date Sampled	Max depth sampled (ft.)	Max depth of submerged plant growth (ft.)	Vegetated depth range sampled (ft.)	Number of points sampled	Number of points sampled with native submersed vegetation	Percentage of points sampled with native submersed vegetation	Percentage of points sampled with submersed vegetation	Average # of native submersed taxa per sample point	Submersed species richness (number of submerged species)
6/17/2008	10.5	10.5	2.3 - 10.5	128	65	50.78%	60.15%	0.47	5
10/2/2008	16.4	12.1	0.98 - 12.1	151	100	66.23%	80.13%	0.72	5
6/9/2011	15.4	12.5	0.98 - 12.5	154	77	50.00%	66.88%	0.58	7
9/2/2011	15.4	10.6	0.6 - 10.6	154	100	64.94%	64.94%	0.66	4
5/17/2012	20.0	8.5	1.3 - 8.5	154	77	50.00%	61.88%	0.53	6
8/2/2012	17.8	13.2	0.98 - 13.2	154	94	61.04%	68.18%	0.72	9

Fish Lake	% Frequency					
	6/17/2008	10/2/2008	6/9/2011	9/2/2011	5/17/2012	8/2/2012
Potamogeton crispus	2.34	0.00	1.95	0.00	9.09	9.09
Myriophyllum spicatum	25.00	47.02	42.86	12.99	14.29	21.49
Ceratophyllum demersum	42.19	50.33	45.45	64.94	46.10	62.81
Elodea canadensis	1.56	0.00	8.44	0.00	0.00	0.00
Najas guadalupensis	13.28	18.54	0.00	0.00	0.00	0.00
Najas flexilis	0.00	0.00	2.60	5.19	0.00	6.61
Potamogeton foliosus	0.00	0.00	0.00	0.00	3.25	0.00
Potamogeton pusillus	0.00	0.00	0.00	0.00	0.00	0.83
Potamogeton richardsonii	0.00	1.99	0.00	0.00	0.00	0.00
Potamogeton zosterformis	0.00	0.00	0.65	0.65	0.65	0.00
Stuckenia pectinata	0.00	3.31	0.65	0.65	2.60	4.96
Chara	0.00	0.00	0.00	0.00	0.00	1.65
Nuphar advena	5.47	7.95	1.30	8.44	4.55	9.09
Nymphaea odorata	14.06	23.18	17.53	38.31	23.38	26.45
Wolffia columbiana	0.00	0.00	0.00	0.65	0.00	0.00
Lemna trisulca	0.00	0.66	0.00	0.65	0.00	1.65
Lemna minor	0.00	1.32	1.30	2.60	0.00	0.00
Spirodela polyrhiza	0.78	0.00	0.00	1.95	0.00	0.83
Algae	0.00	0.00	27.92	15.58	67.53	18.18

Rice Lake									
Date Sampled	Max depth sampled (ft)	Max depth of submerged plant growth (ft)	Vegetated depth range sampled (ft)	Number of points sampled	Number of points sampled with native submersed vegetation	Percentage of points sampled with native submersed vegetation	Percentage of points sampled with submersed vegetation	Average # of native submersed taxa per sample point	Submersed species richness (number of submerged species)
6/1/2009	11.5	7.5	1.0 - 7.5	207	45	21.74%	22.22%	0.39	8
6/1/2012	12.8	10.2	1.0 - 10.2	207	51	24.64%	32.85%	0.4	9
7/25/2014	10.8	7.9	1.0 - 7.9	207	71	34.30%	35.75%	1.28	11

Rice Lake	% Frequency		
	6/1/2009	**6/1/2012**	**7/25/2014**
Potamogeton crispus	9.66	21.74	18.84
Myriophyllum spicatum	1.93	0.48	7.73
Ceratophyllum demersum	18.36	18.36	31.40
Elodea canadensis	3.86	2.42	9.66
Potamogeton foliosus	0	1.93	4.83
Potamogeton zosteriformis	3.38	3.86	8.21
Stuckenia pectinata	8.70	8.70	12.08
Zannichelia palustris	2.90	3.86	1.93
Zosterella dubia	1.93	0.48	1.93
Najas flexilis	0	0	0.97
Nymphaea odorata	0	0.48	2.42
Lemna minor	3.38	0	13.04
Lemna trisulca	1.45	6.28	6.76
Spirodela polyrhiza	0	4.35	12.08
Wolffia columbiana	0	6.28	10.14

Diamond Lake									
Date Sampled	Max depth sampled (ft.)	Max depth of submerged plant growth (ft.)	Vegetated depth range sampled (ft.)	Number of points sampled	Number of points sampled with native submersed vegetation	Percentage of points sampled with native submersed vegetation	Percentage of points sampled with submersed vegetation	Average # of native submersed taxa per sample point	Submersed species richness (number of submerged species)
6/30/2011	8.2	8.2	0.3 - 8.2	105	73	69.52%	98.10%	1.49	7
9/9/2011	7.6	7.6	0.4 - 7.6	105	86	81.90%	81.90%	1.3	5
5/18/2012	8.2	8.2	3.0 - 8.2	105	65	61.90%	100.00%	0.95	4
8/31/2012	7.9	6.7	1.0 - 6.7	105	84	80.00%	81.00%	1.29	5

Diamond Lake	**% Frequency**			
	6/30/2011	**9/9/2011**	**5/18/2012**	**8/31/2012**
Potamogeton crispus	92.38	1.90	88.57	3.85
Ceratophyllum demersum	43.81	50.48	46.67	59.62
Stuckenia pectinata	8.57	3.81	0.00	2.88
Potamogeton pusillus	52.38	0.00	0.00	0.96
Elodea canadensis	40.95	73.33	46.67	68.27
Nitella spp	0.95	0.00	0.00	0.00
Zannichellia palustris	1.90	0.00	0.00	0.00
Lemna minor	2.86	0.00	0.00	3.85
Spirodela polyrhiza	3.81	0.00	0.00	0.96
Algae	1.90	22.86	17.14	25.00
Potamogeton foliosus	0.00	2.86	1.90	0.00
Nymphaea odorata	0.00	0.95	0.95	0.96
Wolffia columbiana	0.00	0.95	0.00	0.00

Cowley Lake									
Date Sampled	Max depth sampled	Max depth of submerged plant growth	Vegetated depth range sampled	Number of points sampled	Number of points sampled with native submersed vegetation	Percentage of points sampled with native submersed vegetation	Percentage of points sampled with submersed vegetation	Average # of native submersed taxa per sample point	Submersed species richness (number of submerged species)
6/5/2012	7.9	7.5	2.0 - 7.9	82	49	59.76%	82.90%	0.92	6
8/29/2012	6.9	0	0	82	0	0	0	0	0

Cowley Lake	% Frequency	
	6/5/2012	8/29/2012
Potamogeton crispus	68.29	0
Ceratophyllum demersum	3.66	0
Elodea canadensis	30.49	0
Potamogeton foliosus	1.22	0
Potamogeton pusillus	47.56	0
Stuckenia pectinata	9.76	0
Lemna minor	24.39	0

Henry Lake									
Date Sampled	Max depth sampled (ft)	Max depth of submerged plant growth (ft)	Vegetated depth range sampled (ft)	Number of points sampled	Number of points sampled with native submersed vegetation	Percentage of points sampled with native submersed vegetation	Percentage of points sampled with submersed vegetation	Average # of native submersed taxa per sample point	Submersed species richness (number of submerged species)
5/25/2012	8.3	8.3	0.6-8.3	89	65	73.03%	97.80%	1.37	6
8/20/2012	8.6	7.8	1.3-7.8	95	66	69.47%	69.47%	1.48	5

Henry Lake	% Frequency	
	5/25/2012	8/20/2012
Potamogeton crispus	85.39	0.00
Ceratophyllum demersum	35.96	47.37
Elodea canadensis	57.30	47.37
Potamogeton foliosus	2.25	0.00
Potamogeton zosterifomris	32.58	69.47
Utricularia vulgaris	8.99	47.37
Heteranthera dubia	0.00	5.26
Spirodela polyrhiza	33.71	3.16
Lemna minor	8.99	31.58
Lemna trisulca	5.62	32.63
Wolffia columbiana	0.00	1.05
Algae	2.25	25.26
Schoenoplectus fluvi	13.48	0.00

Slyvan Lake									
Date Sampled	Max depth sampled (ft)	Max depth of submerged plant growth (ft)	Vegetated depth range sampled (ft)	Number of points sampled	Number of points sampled with native submersed vegetation	Percentage of points sampled with native submersed vegetation	Percentage of points sampled with submersed vegetation	Average # of native submersed taxa per sample point	Submersed species richness (number of submerged species)
6/8/2012	15	13.9	2.1-13.9	93	23	24.73%	59.14%	0.28	5
9/6/2012	14.7	6	1.8-6.0	93	17	18.28%	19.35%	0.23	3

Sylvan Lake	**% Frequency**	
	6/8/2012	**9/6/2012**
Potamogeton crispus	58.06	8.60
Ceratophyllum demersum	1.08	4.30
Elodea canadensis	9.68	18.28
Potamogeton pusillus	5.38	0.00
Potamogeton zosterifomris	11.83	0.00
Spirodela polyrhiza	10.75	1.08
Lemna minor	6.45	1.08

Goose Lake									
Date Sampled	Max depth sampled (ft)	Max depth of submerged plant growth (ft)	Vegetated depth range sampled (ft)	Number of points sampled	Number of points sampled with native submersed vegetation	Percentage of points sampled with native submersed vegetation	Percentage of points sampled with submersed vegetation	Average # of native submersed taxa per sample point	Submersed species richness (number of submerged species)
6/5/2012	5.91	5.91	0.13-5.91	85	28	32.94%	32.94%	0.44	6
8/9/2012	6.1	5	1.0 - 5.0	85	28	32.94%	32.94%	0.49	5

Goose Lake	**% Frequency**	
	6/5/2012	**8/9/2012**
Potamogeton crispus	2.35	0.00
Ceratophyllum demersum	0.00	3.53
Elodea canadensis	31.76	23.53
Potamogeton zosterifomris	1.18	2.35
Potamogeton foliosus	4.71	0.00
Stuckenia pectinata	4.71	17.65
Najas spp.	1.18	2.35
Nymphaea odorata	0.00	1.18
Spirodela polyrhiza	1.18	0.00
Lemna minor	0.00	5.88
Algae	0.00	4.71

Internal Phosphorus Loading and Sediment Phosphorus Fractionation Analysis for Diamond Lake, Minnesota

19 February, 2013

William F. James
University of Wisconsin - Stout
Sustainability Sciences Institute
123E Jarvis Hall
Menomonie, Wisconsin 54751
715-338-4395
williamfjames@charter.net
jamesw@uwstout.edu

OBJECTIVES

The objectives of this investigation were to quantify rates of phosphorus (P) release from sediments under laboratory-controlled oxic (i.e., aerobic) and anoxic (i.e., anaerobic) conditions and concentrations of biologically-labile (i.e., subject to recycling) and refractory (i.e., biologically inert and subject to burial) P fractions for sediment collected in Diamond Lake (Three Rivers Park District), Minnesota.

APPROACH

Laboratory-derived rates of P release from sediment under oxic and anoxic conditions: Sediment cores were collected at two stations by personnel from the Three Rivers Park District in November, 2012, for determination of rates of P release from sediment under oxic (2 replicates) and anoxic (2 replicates) conditions. The cores were drained of overlying water and the upper 10 cm of sediment was transferred intact to a smaller acrylic core liner (6.5-cm dia and 20-cm ht) using a core remover tool. Surface water collected from the lake was filtered through a glass fiber filter (Gelman A-E), with 300 mL then siphoned onto the sediment contained in the small acrylic core liner without causing sediment resuspension. Sediment incubation systems consisted of the upper 10-cm of sediment and filtered overlying water (~ 10-cm water column depth) contained in acrylic core liners that were sealed with rubber stoppers. They were placed in a darkened environmental chamber and incubated at a constant temperature (20 to 25 ^{o}C). The oxidation-reduction environment in the overlying water was controlled by gently bubbling air (oxic) or nitrogen (anoxic) through an air stone placed just above the sediment surface in each system. Bubbling action insured complete mixing of the water column but did not disrupt the sediment.

Water samples (~ 7 mL) for soluble reactive P were collected from the center of each system using a 10-cc syringe and filtered through a 0.45 µm membrane filter. The water volume removed from each system during sampling was replaced by addition of filtered lake water preadjusted to the proper oxidation-reduction condition. These volumes were accurately measured for determination of dilution effects. Soluble reactive P was measured colorimetrically using the ascorbic acid method (APHA 2005). Rates of P release from the sediment (mg m^{-2} d^{-1}) were calculated as the linear change in mass in the overlying water divided by time (days) and the area (m^2) of the incubation core liner. Regression analysis was used to estimate rates over the linear portion of the data.

Sediment chemistry: The upper 10 cm of an additional core was sectioned for analysis of moisture content (%), sediment density (g/mL), loss on ignition (i.e., organic matter content, %), loosely-bound P, iron-bound P, aluminum-bound P, calcium-bound P, labile and refractory organic P, total P and total iron (Fe; all expressed at mg/g). A known volume of sediment was dried at 105 ^{o}C for determination of moisture content and sediment density and burned at 500 ^{o}C for determination of loss-on-ignition organic matter content (Håkanson and Jansson 2002). Additional sediment was dried to a constant weight, ground, and digested for analysis of total P and Fe using standard methods (EPA method 200.7).

Phosphorus fractionation (Table 1) was conducted according to Hieltjes and Lijklema (1980), Psenner and Puckso (1988), and Nürnberg (1988) for the determination of ammonium-chloride-extractable P (loosely-bound P), bicarbonate-dithionite-extractable P (i.e., iron-bound P), sodium hydroxide-extractable P (i.e., aluminum-bound P), and hydrochloric acid-extractable P (i.e., calcium-bound P). A subsample of the sodium hydroxide extract was digested with potassium persulfate to determine nonreactive sodium hydroxide-extractable P (Psenner and Puckso 1988). Labile organic P was calculated as the difference between reactive and nonreactive sodium hydroxide-extractable P. Refractory organic P was estimated as the difference between total P and the sum of the other fractions.

The loosely-bound and iron-bound P fractions are readily mobilized at the sediment-water interface as a result of anaerobic conditions that result in desorption of P from sediment and diffusion into the overlying water column (Mortimer 1971, Boström 1984, Nürnberg 1988). The sum of the loosely-bound and iron-bound P fraction represents redox-sensitive P (i.e., the P fraction that is active in P release under anaerobic and reducing conditions). In addition, labile organic P can be converted to soluble P via bacterial mineralization (Jensen and Andersen 1992) or hydrolysis of bacterial polyphosphates to soluble phosphate under anaerobic conditions (Gächter et al. 1988, Gächter and Meyer 1993, Hupfer et al. 1995). The sum of redox-sensitive P and labile organic P collectively represent biologically-labile P. This fraction is active in recycling pathways that result in exchanges of phosphate from the sediment to the overlying water column and potential assimilation by algae. In contrast, aluminum-bound, calcium-bound, and refractory organic P fractions are more chemically inert and subject to burial rather than recycling.

RESULTS AND INTERPRETATION

Rates of Phosphorus Release from Sediment

P mass and concentration increased rapidly and linearly in the overlying water column of sediment systems maintained under anoxic conditions (Figure 1). P mass and concentration increases were also very similar for replicate anoxic sediment core incubations collected from station 1. The rate of P mass and concentration increase was generally greater for cores collected from station 2 versus station 1; however, there was much more variation between replicates. The mean P concentration maximum in the overlying water at the end of the incubation period was 0.218 mg/L (± 0.013 standard error; S.E.) and 0.452 mg/L (± 0.142 S.E.) for station 1 and 2, respectively. Mean rates of P release under anoxic conditions were moderate at 2.6 mg m^{-2} d^{-1} (± 0.3 S.E.) for station 1 and 3.8 mg m^{-2} d^{-1} (± 1.7 S.E.) for station 2 (Table 2), but indicative of eutrophic conditions (Nürnberg 1988).

P mass and concentration increases in the overlying water column were much lower for sediment cores incubated under oxic conditions (Figure 2). After an initial equilibration period, P mass and concentration increased linearly between day 5 and 21 of incubation for sediment cores collected from station 1. In contrast, P increases were much lower in the overlying water column for sediment cores collected from station 2. Mean rates of P release under oxic conditions were moderately low at 0.172 mg m^{-2} d^{-1} (± 0.046 S.E.) and 0.107 mg m^{-2} d^{-1} (± 0.078 S.E.) for station 1 and 2, respectively (Table 2). The maximum SRP concentration attained in the overlying water column toward the end of the incubation period was ~ 0.080 mg/L (± 0.015 S.E.) for station 1, which was moderate and could represent an important available P source for assimilation by algae. In contrast, the SRP concentration maximum was very low for station 2 at only 0.014 mg/L (± 0.006 S.E.).

Sediment Textural and Chemical Characteristics

The upper 10-cm sediment layer exhibited a moderately high moisture content and low bulk density, indicating fined-grained flocculent sediment with moderately high porosity (i.e., interstitial volume for porewater; Table 3). Sediment organic matter content was moderately high at ~29 to 31%, typical for productive lake sediments. Concentrations of biologically-labile (i.e., subject to recycling back to the overlying water column; loosely-bound P, iron-bound P, and labile organic P) and refractory (i.e., aluminum-bound, calcium-bound, and refractory organic P) P concentrations were also moderate (Table 4 and Figure 3). Overall, biologically-labile P represented greater than 50% of the sediment total P concentration at station 1 but only 37% at station 2 (Table 5 and Figure 4).

Redox-sensitive P concentrations (i.e., the sum of loosely-bound and iron-bound P) were moderate and accounted for ~ 39% of the biologically-labile P (Table 4). Anoxic P release rates for Diamond Lake appeared to be correlated with iron-bound P (expressed on a μg P/g fresh sediment mass basis; Nürnberg 1988), suggesting that the iron-bound P concentration was an important factor in anoxic P release (Figure 5). Overall, iron-bound

P was moderate to low in concentration at 0.11 to 0.14 mg/g DW and accounted for ~ 40% of the biologically-labile P and ~ 18% of the sediment total P. Labile organic P, which can be recycled to the water column as a result of bacterial metabolic processes, represented a large portion of the biologically-labile P pool at 59% to 62% (Table 4). The loosely-bound P fraction was relatively low and accounted for only ~ 4% to 5% of the biologically-labile P and 11% of the redox-sensitive P. Loosely-bound P typically represents P in interstitial water and concentrations are usually low relative to other sediment P fractions.

Refractory organic P represented 38 to 71% of the biologically-refractory P fraction (Table 4 and Figure 4). In addition, calcium-bound P (i.e., P associated with apatite minerals) represented a large portion of the biologically-refractory P fraction at station 1 (~ 49%). Aluminum-bound P concentrations were moderately low, accounting for only ~ 8% to 13% of the biologically-refractory P (Table 4).

Total sediment Fe concentrations were moderately high for Diamond Lake (Table 5). They were also high relative to the concentration of total sediment P, resulting in an Fe:P ratio (mass:mass) of ~16:1. Ratios greater than 10:1 to 15:1 have been associated with regulation of P release from sediments under oxic (aerobic) conditions due to efficient binding of P onto iron oxyhydroxides in the sediment oxic microzone (Jensen et al. 1992). Strong and complete P binding at higher relative concentrations of Fe were suggested explanations for patterns reported by Jensen et al. At lower Fe:P ratios, Fe binding sites become increasingly saturated with P, allowing for diffusion of excess porewater P into the overlying water column, even in the presence of a sediment oxic microzone. Oxic P release rates for Diamond Lake sediments were very low in conjunction with a high Fe:P ratio, a pattern that could be attributed to the Jensen et al. model.

REFERENCES

APHA (American Public Health Association). 2005. Standard Methods for the Examination of Water and Wastewater. 21th ed. American Public Health Association, American Water Works Association, Water Environment Federation.

Boström B. 1984. Potential mobility of phosphorus in different types of lake sediments. Int. Revue. Ges. Hydrobiol. 69:457-474.

Gächter R., Meyer JS, Mares A. 1988. Contribution of bacteria to release and fixation of phosphorus in lake sediments. Limnol. Oceanogr. 33:1542-1558.

Gächter R, Meyer JS. 1993. The role of microorganisms in mobilization and fixation of phosphorus in sediments. Hydrobiologia 253:103-121.

Håkanson L, Jansson M. 2002. Principles of lake sedimentology. The Blackburn Press, Caldwell, NJ USA.

Hjieltjes AH, Lijklema L. 1980. Fractionation of inorganic phosphorus in calcareous sediments. J. Environ. Qual. 8: 130-132.

Hupfer M, Gächter R., Giovanoli R. 1995. Transformation of phosphorus species in settling seston and during early sediment diagenesis. Aquat. Sci. 57:305-324.

Jensen HS, Kristensen P, Jeppesen E, Skytthe A. 1992. Iron:phosphorus ratio in surface sediment as an indicator of phosphate release from aerobic sediments in shallow lakes. Hydrobiol. 235/236:731-743.

Mortimer CH. 1971. Chemical exchanges between sediments and water in the Great Lakes – Speculations on probable regulatory mechanisms. Limnol. Oceanogr. 16:387-404.

Nürnberg GK. 1988. Prediction of phosphorus release rates from total and reductant-soluble phosphorus in anoxic lake sediments. Can. J. Fish. Aquat. Sci. 45:453-462.

Psenner R, Puckso R. 1988. Phosphorus fractionation: Advantages and limits of the method for the study of sediment P origins and interactions. Arch. Hydrobiol. Biel. Erg. Limnol. 30:43-59.

Table 1. Sequential phosphorus (P) fractionation scheme, extractants used, and definitions of recycling potential.

Variable	Extractant	Recycling Potential
Loosely-bound P	1 M Ammonium Chloride	Biologically labile; Soluble P in interstitial water and adsorbed to $CaCO_3$; Recycled via direct diffusion, eH and pH reactions, and equilibrium processes
Iron-bound P	0.11 M Sodium Bicarbonate-dithionate	Biologically labile; P adsorbed to iron oxyhydroxides (Fe(OOH); Recycled via eH and pH reactions and equilibrium processes
Labile organic P	Persulfate digestion of the NaOH extraction	Biologically labile; Recycled via bacterial mineralization of organic P and mobilization of polyphosphates stored in cells
Aluminum-bound P	0.1 N Sodium Hydroxide	Biologically refractory; Al-P minerals with a low solubility product
Calcium-bound P	0.5 N Hydrochloric Acid	Biologically refractory; Represents Ca-P minerals such as apatite with a low solubility product
Refractory organic P	Determined by subtraction of other forms from total P	Biologically refractory; Organic P that isresistant to bacterial breakdown

Table 2. Mean (1 standard error in parentheses; n=2) rates of phosphorus (P) release for sediments collected in Diamond Lake.

Station	Diffusive P flux	
	Oxic ($mg\ m^{-2}\ d^{-1}$)	Anoxic ($mg\ m^{-2}\ d^{-1}$)
Diamond 1	0.172 (0.046)	2.6 (0.3)
Diamond 2	0.107 (0.078)	3.8 (1.7)

Table 3. Textural characteristics for sediments collected in Diamond Lake.

Station	Moisture Content (%)	Bulk Density (g/cm^3)	Sediment Density (g/cm^3)	Loss-on-ignition (%)
Diamond 1	90.1	1.044	0.114	31.1
Diamond 2	90.1	1.045	0.124	28.8

Table 4. Concentrations of biologically labile and refractory P for sediments collected in Diamond Lake. DW = dry mass, FW = fresh mass.

Station	Redox-sensitive and biologically labile P				Refractory P		
	Loosely-bound P (mg/g DW)	Iron-bound P (mg/g DW)	Iron-bound P (ug/g FW)	Labile organic P (mg/g DW)	Aluminum-bound P (mg/g DW)	Calcium-bound P (mg/g DW)	Refractory organic P (mg/g DW)
Diamond 1	0.018	0.144	14	0.257	0.049	0.185	0.146
Diamond 2	0.017	0.113	11	0.187	0.043	0.118	0.385

Table 5. Concentrations of sediment total iron (Fe), phosphorus (P), the total Fe to total P ratio (Fe:P), redox-sensitive P (Redox P; the sum of the loosely-bound and iron-bound P fraction), biologically-labile P (Bio-labile P; the sum of redox-P and labile organic P), and refractory P (the sum of the aluminum-bound, calcium-bound, and refractory organic P fractions) for sediments collected in Diamond Lake. DW = dry mass.

Station	Total Fe (mg/g DW)	Total P (mg/g DW)	Fe:P (mass:mass)	Redox P		Bio-labile P		Refractory P	
				(mg/g DW)	(% total P)	(mg/g DW)	(% total P)	(mg/g DW)	(% total P)
Diamond 1	13.073	0.798	16.4	0.162	20.3%	0.419	52.5%	0.380	47.6%
Diamond 2	13.561	0.862	15.7	0.130	15.1%	0.317	36.8%	0.546	63.3%

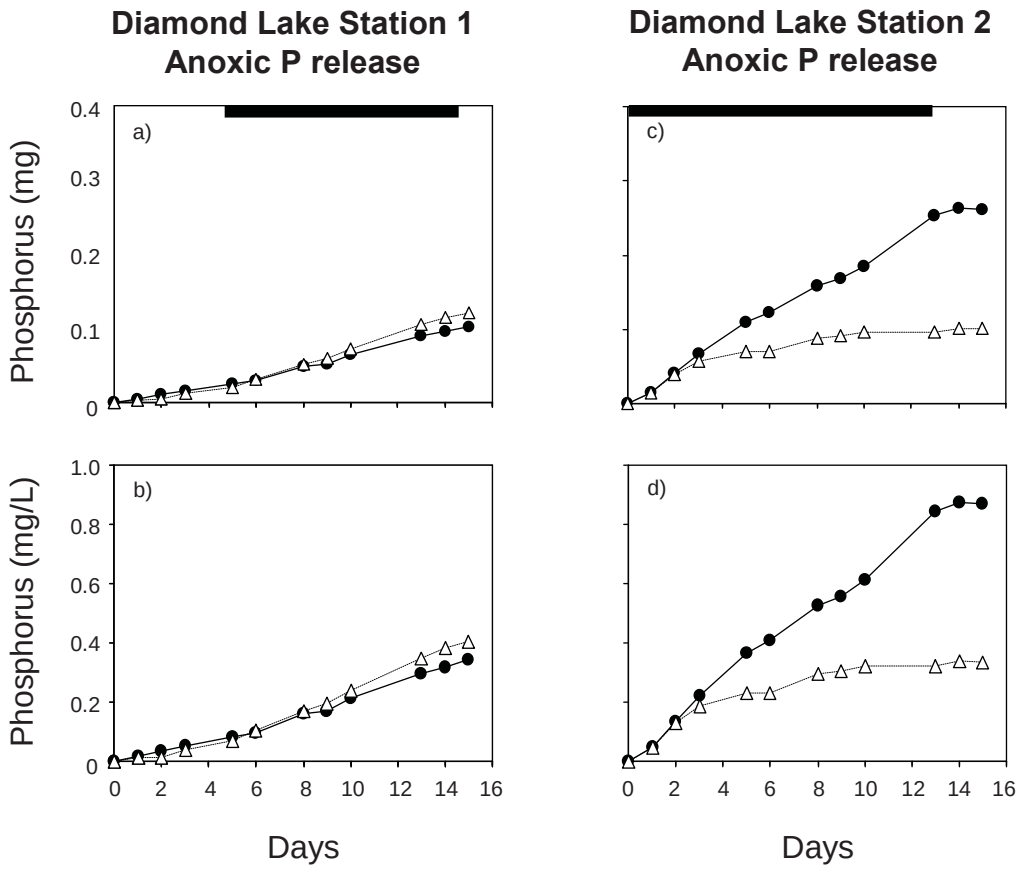

Figure 1. Changes in soluble reactive phosphorus mass (upper panel) and concentration (lower panel) in the overlying water column under anoxic conditions versus time for sediment cores collected in Diamond Lake. Black horizontal bars denote the time period used for estimating rates.

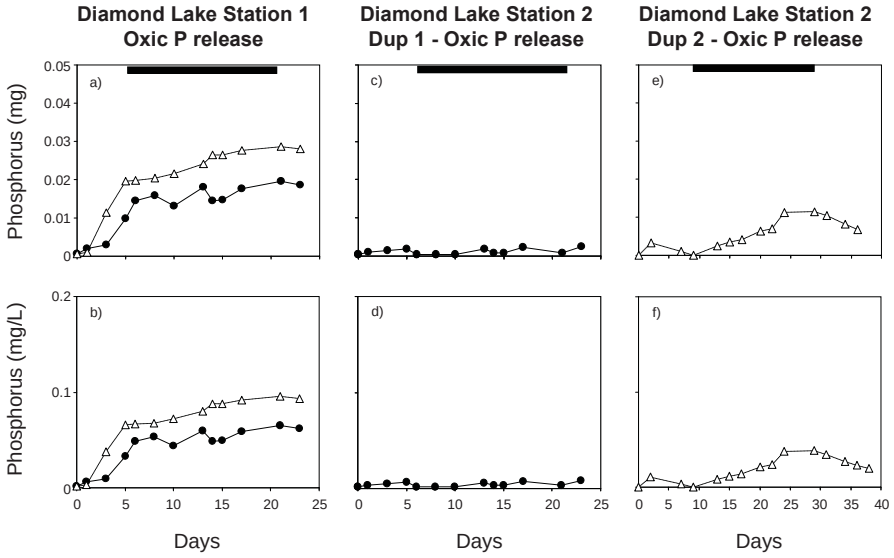

Figure 2. Changes in soluble reactive phosphorus mass (upper panel) and concentration (lower panel) in the overlying water column under oxic conditions versus time for sediment cores collected in Diamond Lake. Duplicate core 2 collected from station 2 was incubated over a longer time period. Black horizontal bars denote the time period used for estimating rates.

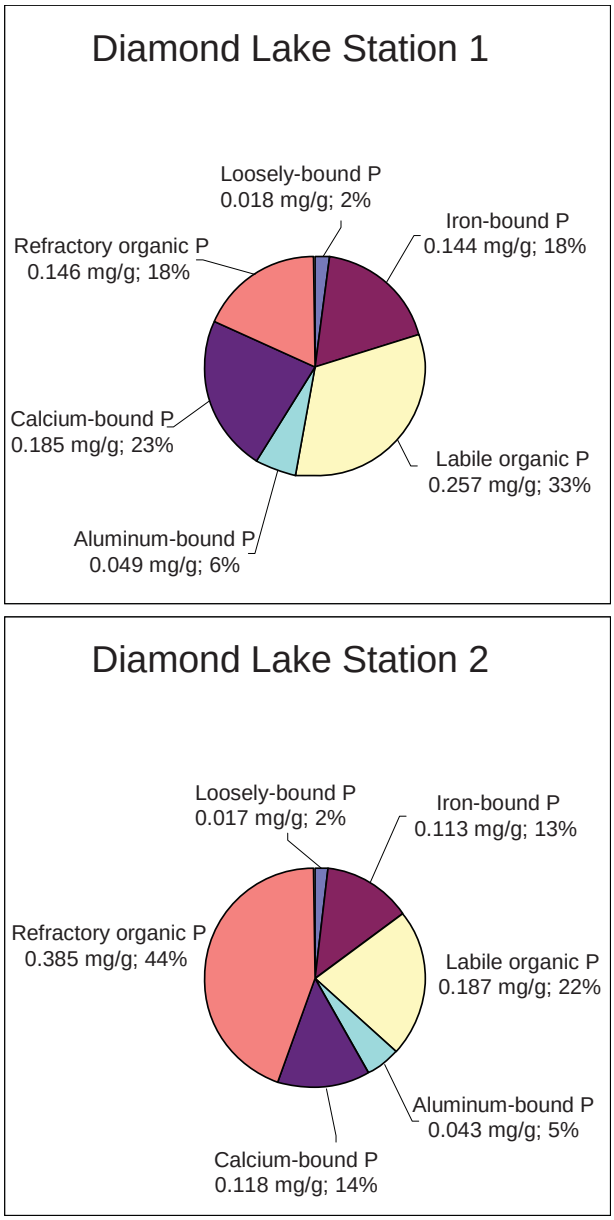

Figure 3. Total phosphorus (P) composition for sediment collected in Diamond Lake. Loosely-bound, iron-bound, and labile organic P are biologically reactive (i.e., subject to recycling) while aluminum-bound, calcium-bound, and refractory organic P are more inert to transformation (i.e., subject to burial). Values next to each label represent concentration (mg/g sediment dry mass) and percent of the total sediment P concentration, respectively.

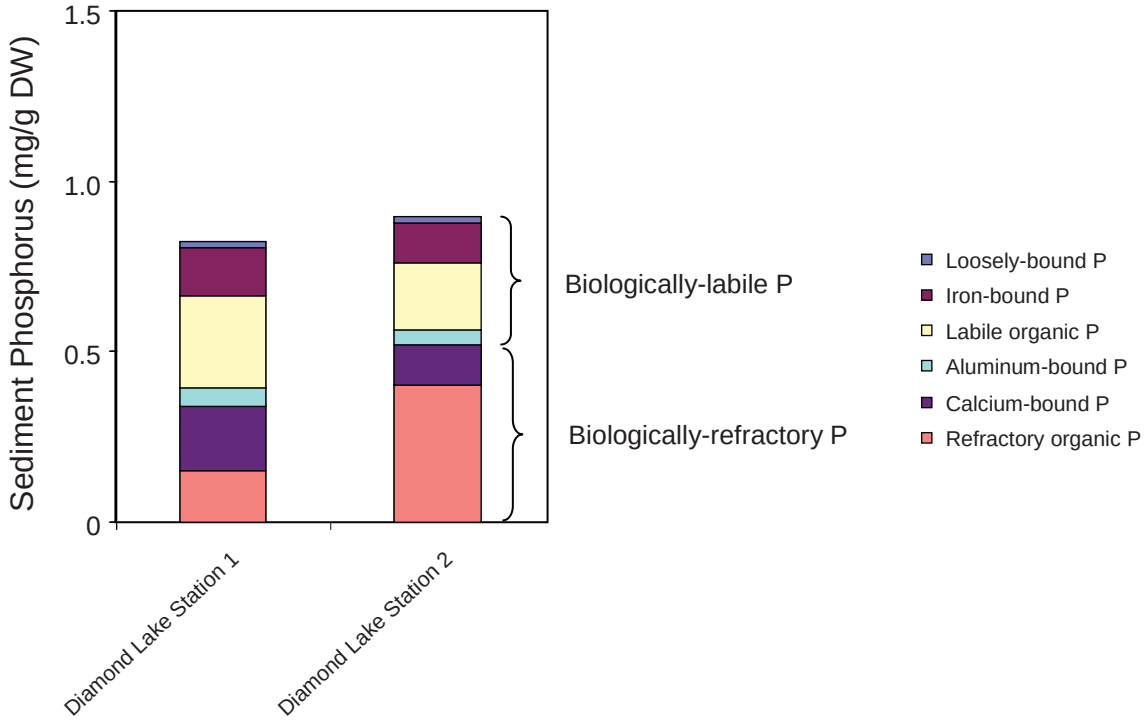

Figure 4. Vertically-stacked bar graph showing the total phosphorus (P) composition for sediment collected in Diamond Lake.

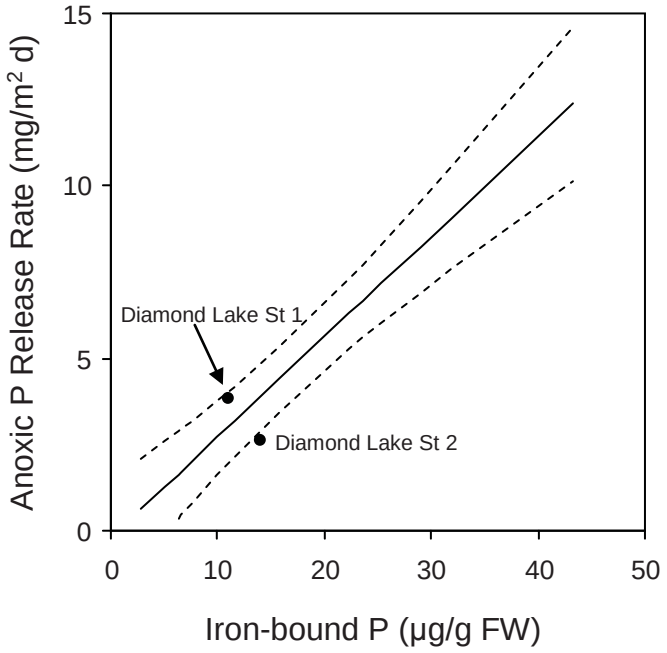

Figure 5. Relationships between iron-bound phosphorus (P; µg g^{-1} fresh sediment mass) and rates of P release from sediments under anoxic conditions. Regression line and 95% confidence intervals from Nürnberg (1988) are shown for comparison.

Elm Creek Management Commission
KAP Study Report

June 30 2013 FINAL

Karlyn Eckman
Department of Forest Resources
University of Minnesota

Contact information: eckma001@umn.edu

Executive Summary

1. A knowledge, attitudes and practices (KAP) study was conducted in 2013 by the University of Minnesota Water Resources Center (WRC) for the Elm Creek Watershed Management Commission (ECWMC). The study focused on three agricultural audiences (crop farmers, livestock operators and horse owners) in the watershed. Staff and public officials from the seven member municipalities were also invited to take the survey. While the relatively small sample cannot be considered representative of all operators in the watershed, study findings highlight audience knowledge, constraints, information needs, attitudes and current practices. It also highlights suggestions and recommendations for civic engagement, education and outreach.

2. Several residents contacted the researcher to express their views about "big government" not interfering in their lives about water quality issues. The low survey response rate is attributed in part to local distrust in government, and to some residents that actively encouraged neighbors not to take the survey. Despite low response rates, the survey highlights a number of opportunities for civic engagement, outreach and education. In addition, respondent information needs, barriers and constraints were identified. The data highlight a number of possible actions and steps that can be taken by ECWMC as the TMDL process unfolds.

3. A key finding is that most respondents believe that runoff from housing developments has the greatest impact on water quality. Very few respondents flagged manure as having the greatest impact on water quality in this watershed, which most ranked as third or fourth in terms of impact. Furthermore, livestock operators do not seem to be aware that manure is impacting local water resources, and most believe that they are already doing the right thing.

4. While most respondents believe that everyone is responsible for water quality, the majority do not seem to feel that their own operation is responsible for water quality issues in local water bodies. Agricultural operators tend to attribute problems to runoff from residential developments. A major challenge will be to raise awareness among all respondents about the specific causes of water impairments, and convincing property owners to accept responsibility for their role in contributing to the impairments.

5. There is an impression in this study that respondents and stakeholders are unaware of the potential of civic engagement in the watershed planning process. Civic engagement is a *requirement* of a TMDL, and is best described as a democratic process whereby local citizens become directly involved in watershed planning, activities, education, and determining outcomes. However, civic engagement takes time and cannot be rushed, and does not happen simply by holding a facilitated public meeting. Civic engagement should be as something that is not an add-on activity. Rather it should be seamlessly embedded in the day-to-day work on water bodies in the watershed. Most steps in the WRAPS process could include some kind of engagement activity, which when linked together over time could help ECWMC to build trusting relationships, and engage civic imagination and skills of the public in the process. Civic

engagement can help to get work done, but it takes a committed person on the ground making this their focus and passion.

6. Some respondents appear to be ready to take a more active role, and there may be good potential to engage them in the TMDL process. There are many positive findings upon which to develop mechanisms for civic engagement, outreach and education.
6. Most respondents understand the linkage between people's actions and water quality, and have some basic knowledge about clean water. Most are generally interested in trying something new to improve water quality, and the various sampling groups express different preferences for ways to learn about and to adopt BMPs. It is likely that people will respond to communications that are positive in tone and content, and that recognize and reward stewardship and water conservation efforts. This study did not explore social networks or peer-to-peer communication, but there is no reason to believe that these strategies would not be successful.

7. A constraints and barriers question revealed that people believe that they are already doing the right thing. Although this view may prevent them changing their practices, this is actually a very positive finding. It is likely that a communication strategy focusing on stewardship and "doing the right thing" will resonate with this worldview. The second most important constraint for respondents is cost. In particular, agricultural groups (and especially horse business operators) seem to be more sensitive to cost concerns. A financial incentive could be of interest to some individuals (but not necessarily all) to better enable them to adopt a BMP. A third concern for all groups is the need for more information and not knowing about how to install a BMP. There appears to be an unmet need for technical information across all groups. At least some respondents noted other constraints (lack of equipment, lack of time etc.).

8. Most of the possible mechanisms and incentives appealed to at least some sample sub-groups, but not necessarily to all groups equally (e.g., one size does not fit all). Results suggest that the best approach is to offer multiple opportunities for different subgroups to learn about different BMPs. A targeted educational strategy should be developed, emphasizing the impacts of manure on water quality. This should not be done in a putative or scolding manner, as it will likely turn off message recipients. Given the small sample size, and diverse nature of the sub-groups, ECWMC should consider offering small hands-on workshops or other learning opportunities for targeted groups. This will require developing audience-specific and content-specific workshop materials and curricula. To do that, it is recommended that ECWMC consider recruiting an experienced full-time staff member dedicated to education and outreach.

Acronyms

BMP	Best management practice
CATA	Check all that apply
CE	Civic engagement
COOR	Check only one response
DNR	Minnesota Department of Natural Resources
ECWMC	Elm Creek Watershed Management Commission
KAP	Knowledge, attitudes and practices
MPCA	Minnesota Pollution Control Agency
n	Number
Q	Question
TMDL	Total maximum daily load
WRC	Water Resources Center (University of Minnesota)

Introduction

A KAP (knowledge, attitudes and practices) study was conducted in the spring of 2013 by the University of Minnesota Water Resources Center (WRC) on behalf of the Elm Creek Watershed Management Commission (ECWMC). The purpose of the study is to explore the motivations, interests, concerns and constraints for three local audiences within the watershed (crop farmers, livestock farmers and horse owners). The survey is characterized as a formative study that will provide baseline (pre-project) information. The results will contribute to the development of a civic engagement strategy for the three audiences.

This study followed the KAP study protocol outlined in Eckman (2013). The process began with a small group of stakeholders, comprised of ECWMC board members and local residents. A “gap exercise” identified what was not known about the population of interest, but should be learned in order to successfully engage people and develop educational content. The exercise participants identified a number of questions that became the basis for questionnaire construction. A first draft questionnaire was prepared and circulated back to the group for comments and revisions. Some questions used in a manure management KAP study in Rock County were selected by ECWMC for inclusion in the ECWMC KAP study.

The questionnaire draft was then reviewed by peers and colleagues, and revised to be sure that it was neutral in tone and did not suggest that farmers or livestock owners are to blame for water quality issues. The draft questionnaire was then pre-tested. Respondents were informed that taking the survey was voluntary and were assured of strict confidentiality. The questionnaire mentioned government entities three times, to determine whether agencies such as ECWMC, DNR or MPCA are sources of information for farmers; to determine if respondents would be willing to work with their local government on water quality issues; and to ask who respondents believe are responsible for improving water quality.

From verbal and written comments received it is clear that this study area has unusually strong opinions about the role of government and taxation, which likely influenced response rates.

Sampling Frame

The survey sampled 246 property owners who were determined to keep livestock within the ECWMC boundaries, and who may contribute nutrients and bacteria to the Elm Creek TMDL. The sample population was obtained from a database created by ECWMC staff members based on the location of known agricultural properties. In addition, watershed staff used Goggle Earth street-view to determine the approximate number and types of livestock housed on each parcel. From this exercise a spreadsheet was created listing the property owner and addresses of those known to keep livestock. This was the core sampling group targeted by the KAP study. This exercise found that more property owners than expected kept livestock (Table 1 below).

Table 1: Approximate livestock numbers in the ECWMC

Livestock type	Census
Cattle	2027 (1132 beef; 895 dairy cows)
Horses	1382
Sheep	104
Hogs	35
Llamas	6
Elk	40
Total animal units	3594

The sample is considered to be purposive and non-random. 40 respondents completed the survey on-line, for a 16% response rate of all livestock operators of operators in the watershed boundaries. The survey link was also made available on the ECWMC website and to staff and officials of the seven member municipalities of the watershed district. 20 municipal staff took the survey, for a total of 60 responses (24%). While this response rate is disappointing, it is comparable to an undated survey conducted by Betsy Wieland (Minnesota UM Extension) of livestock owners in Medina (21 questionnaires out of 85 were returned for a 25% response rate).

A possible factor influencing the low response rate is the apparent conservative political and libertarian inclination of this region of the state. Two of the respondents telephoned the researcher complaining that any survey on water quality would only lead to more government intervention. One caller said that he would not be taking the survey and was going to encourage his neighbors and friends to do the same, because of his belief that social research would bring more taxes and government intrusion. Other comments suggested that government should not intrude on their farming practices. These comments were made despite care taken to make the questionnaire and survey materials neutral and non-threatening.

Survey Administration

Three options were developed for respondents to access the survey. First, a web-link was posted on the ECWMC website for the general public. Second, a targeted mailing was sent by ECWMC staff to all property owners on the sampling list, with an announcement of the on-line survey. A follow-up postcard was then sent to those individuals that had not yet taken the survey. Third, the ECWMC Commissioner from the City of Medina requested that the survey also be taken by municipal staff and officials from the seven member municipalities. An emailed invitation was sent to the seven city administrators with a request to circulate the invitation among their staff and officials. Respondents took the survey on-line through a link to Survey Monkey. Survey Monkey was also used for secure on-line data storage.

Results and Findings

It is important to note the limitations of this particularly survey. As with the earlier Wieland survey, the response rate was low, and is attributed in part to local distrust in government. Furthermore, total responses for all three agricultural groups are low, so results should not be considered representative of the larger population. The data do, however, provide some useful insights.

Raw data will be presented separately for two groups (the agricultural audiences and municipal employees) in this section. Results will be presented in graph formats for each question. Q8 (type of farming operation) identifies the sub-groups of interest in this KAP study, so all questions are cross-tabulated by sub-group. All groups in the sample are shown in Table 1 below.

Table 1.1
Q8. What type of farming operation do you have? Check all that apply.

	Ag respondents (n = 40)	**Municipal respondents (n = 20)**	**All**
Dairy or beef	6.5% (2)	17% (1)	8% (3)
Field crops	13% (4)	17% (1)	13.5% (5)
Both livestock and crops	16% (5)	50% (3)	22% (8)
Horses (hobby)	68% (21)	33% (2)	62% (23)
Horses (business)	6.5% (2)	17% (1)	8% (3)
Other	-	-	7
Answered question	31	6	37
Skipped question	8	14	23
Totals	40	20	60

It is interesting to note that of the twenty municipal staff respondents, six report that they are also agricultural operators. It is not possible to know their location, however, and one of these respondents noted that s/he does not live within the ECWMC boundaries.

Use of local water resources

Introductory questions were posed to gauge respondent awareness of local streams and lakes, and their relative condition. Question 1 (Q1 below) explored all respondents' use of local streams and rivers (see Table 1.1 below). Table 1.2 presents municipal staff responses only. Table 1.3 presents responses for agricultural respondents only. In this table, Q1 results were cross-tabulated with Q8 (type of farming operation) to determine which groups use local waters more or less than other groups.

Q1. Do you visit any of the lakes or streams within a five-mile radius of your home? If so, how do you use the lake or stream? Check all that apply.

Table 1.1 All responses

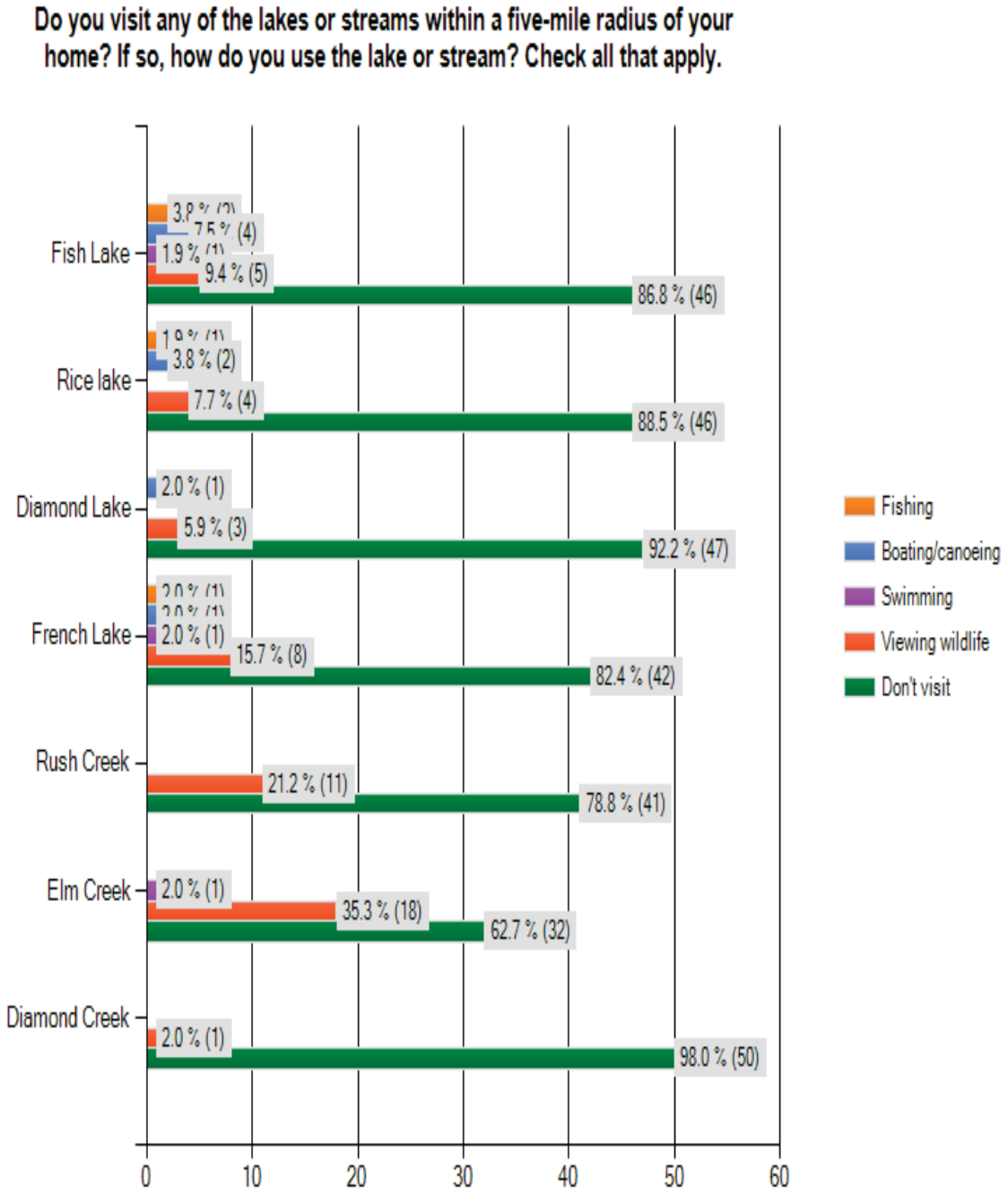

Answered question: 55
Skipped question: 5

Table 1.2 Responses of Municipal Staff

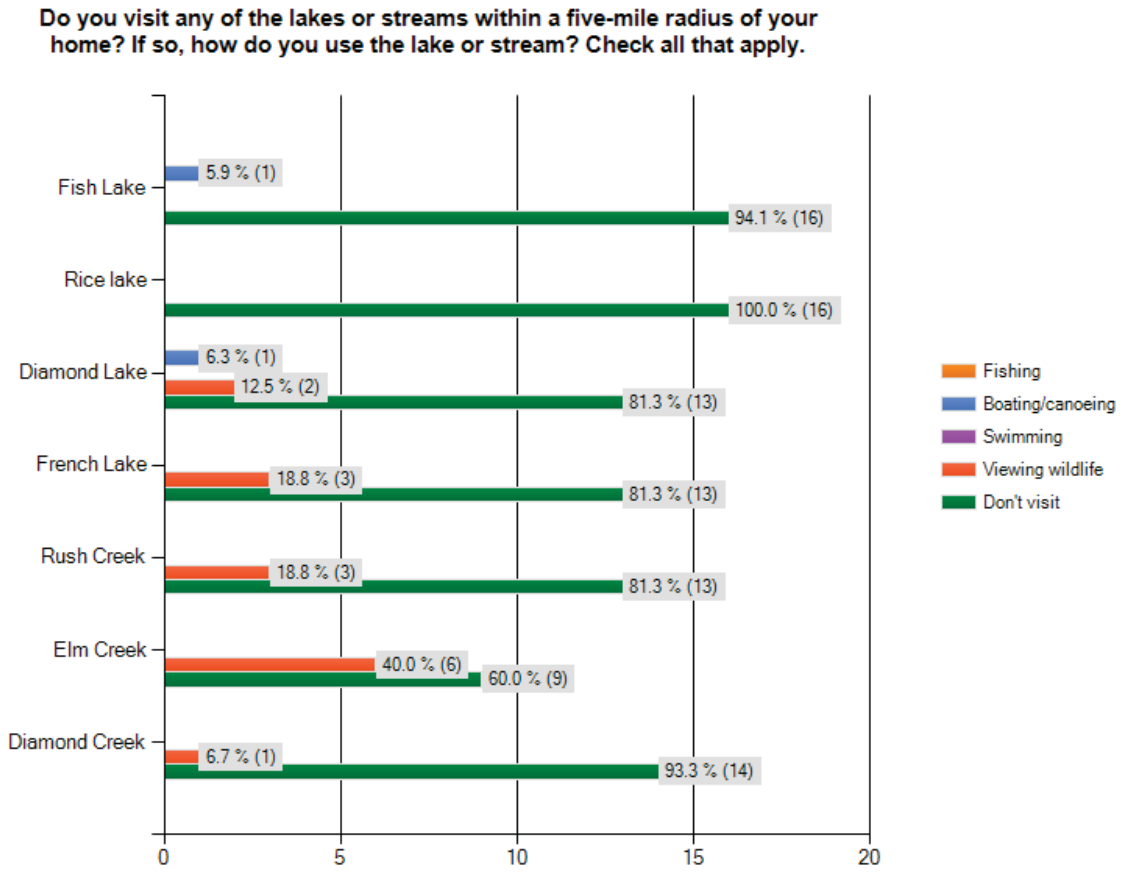

Answered question: 17
Skipped question: 3

Table 1.3 Responses by Subgroup
Crosstab - Q1 x Q8 Type of Farming Operation (n = 40)

Elm Creek Water Survey

Do you visit any of the lakes or streams within a five-mile radius of your home? If so, how do you use the lake or stream? Check all that apply.

		What type of farming operation do you have? Check all that apply.					
		Dairy or beef	Field crops	Both livestock and crops	Horses (hobby or personal use)	Horses (business such as breeding, boarding or training)	Response Totals
Fish Lake	Fishing	0.0% (0)	14.3% (1)	0.0% (0)	4.8% (1)	0.0% (0)	
	Boating/canoeing	0.0% (0)	14.3% (1)	0.0% (0)	4.8% (1)	0.0% (0)	
	Swimming	0.0% (0)	0.0% (0)	0.0% (0)	0.0% (0)	0.0% (0)	
	Viewing wildlife	0.0% (0)	14.3% (1)	33.3% (2)	9.5% (2)	0.0% (0)	
	Don't visit	**100.0% (3)**	**57.1% (4)**	**66.7% (4)**	**81.0% (17)**	**100.0% (3)**	
		3	7	6	21	3	31
Rice lake	Fishing	0.0% (0)	16.7% (1)	0.0% (0)	5.0% (1)	0.0% (0)	
	Boating/canoeing	0.0% (0)	16.7% (1)	0.0% (0)	5.0% (1)	0.0% (0)	
	Swimming	0.0% (0)	0.0% (0)	0.0% (0)	0.0% (0)	0.0% (0)	
	Viewing wildlife	0.0% (0)	16.7% (1)	16.7% (1)	10.0% (2)	0.0% (0)	
	Don't visit	**100.0% (3)**	**50.0% (3)**	**83.3% (5)**	**80.0% (16)**	**100.0% (3)**	

1 of 3

		3	6	6	20	3	31
Diamond Lake	Fishing	0.0% (0)	0.0% (0)	0.0% (0)	0.0% (0)	0.0% (0)	
	Boating/canoeing	0.0% (0)	0.0% (0)	0.0% (0)	5.6% (1)	0.0% (0)	
	Swimming	0.0% (0)	0.0% (0)	0.0% (0)	0.0% (0)	0.0% (0)	
	Viewing wildlife	33.3% (1)	0.0% (0)	0.0% (0)	0.0% (0)	33.3% (1)	
	Don't visit	**66.7% (2)**	**100.0% (4)**	**100.0% (6)**	**94.4% (17)**	**66.7% (2)**	
		3	4	6	18	3	30
French Lake	Fishing	0.0% (0)	0.0% (0)	0.0% (0)	0.0% (0)	0.0% (0)	
	Boating/canoeing	0.0% (0)	0.0% (0)	0.0% (0)	0.0% (0)	0.0% (0)	
	Swimming	0.0% (0)	0.0% (0)	0.0% (0)	0.0% (0)	0.0% (0)	
	Viewing wildlife	**66.7% (2)**	**50.0% (2)**	33.3% (2)	5.6% (1)	33.3% (1)	
	Don't visit	33.3% (1)	**50.0% (2)**	**66.7% (4)**	**94.4% (17)**	**66.7% (2)**	
		3	4	6	18	3	30
Rush Creek	Fishing	0.0% (0)	0.0% (0)	0.0% (0)	0.0% (0)	0.0% (0)	
	Boating/canoeing	0.0% (0)	0.0% (0)	0.0% (0)	0.0% (0)	0.0% (0)	
	Swimming	0.0% (0)	0.0% (0)	0.0% (0)	0.0% (0)	0.0% (0)	
	Viewing wildlife	**66.7% (2)**	**60.0% (3)**	16.7% (1)	21.1% (4)	0.0% (0)	
	Don't visit	33.3% (1)	40.0% (2)	**83.3% (5)**	**78.9% (15)**	**100.0% (3)**	

		3	5	6	19	3	31
Elm Creek	**Fishing**	0.0% (0)	0.0% (0)	0.0% (0)	0.0% (0)	0.0% (0)	
	Boating/canoeing	0.0% (0)	0.0% (0)	0.0% (0)	0.0% (0)	0.0% (0)	
	Swimming	0.0% (0)	0.0% (0)	0.0% (0)	5.3% (1)	0.0% (0)	
	Viewing wildlife	**66.7% (2)**	**60.0% (3)**	40.0% (2)	26.3% (5)	**50.0% (1)**	
	Don't visit	33.3% (1)	40.0% (2)	**60.0% (3)**	**68.4% (13)**	**50.0% (1)**	
		3	5	5	19	2	31
Diamond Creek	**Fishing**	0.0% (0)	0.0% (0)	0.0% (0)	0.0% (0)	0.0% (0)	
	Boating/canoeing	0.0% (0)	0.0% (0)	0.0% (0)	0.0% (0)	0.0% (0)	
	Swimming	0.0% (0)	0.0% (0)	0.0% (0)	0.0% (0)	0.0% (0)	
	Viewing wildlife	0.0% (0)	0.0% (0)	0.0% (0)	5.6% (1)	0.0% (0)	
	Don't visit	**100.0% (3)**	**100.0% (4)**	**100.0% (6)**	**94.4% (17)**	**100.0% (3)**	
		3	4	6	18	3	30
	Other (please specify)	0 replies	0 replies	3 replies	3 replies	0 replies	6
	answered question	3	5	6	21	3	**33**
						skipped question	**4**

Elm Creek is the local water body most visited by respondents, with six municipal staff, two ag producers and eighteen other respondents reporting viewing wildlife there. Elm Creek was visited most often by municipal employees, although overall 67% of them do not visit Elm Creek. Of the agricultural respondents, Elm Creek is most often used for viewing wildlife (n= 13) followed by Rush Creek (10), French Lake (8), Fish Lake (5), Rice Lake (4) and Diamond Lake (3). Ag respondents reported boating on Fish Lake (n = 4), Rice Lake (n = 2), and Diamond and French Lakes (one each). Swimming was reported by one respondent respectively at Fish Lake, French Lake and Elm Creek. Eleven respondents reported visiting Rush Creek for viewing wildlife but for no other purpose. Diamond Lake is least visited by agricultural operators, with only one person viewing wildlife there. In general, however, most respondents do not visit local waters.

TAKEAWAY: The majority of respondents in all sub-groups do not visit local streams and lakes. It is not clear whether the reason is due to disinterest or lack of familiarity (or both). However, several respondents entered comments suggesting that they are not very aware of local water resources. The apparent lack of familiarity with local water bodies for many respondents suggests that opportunities to raise awareness could be created by organizing or sponsoring outings and visits to local streams and lakes. These could be combined with educational messages, historical information, local lore and other aspects designed to raise the awareness about local waters.

Awareness of trends in water quality

A follow-up question asked whether respondents have noted changes in overall quality of local lakes and streams. Combined responses for all responses are given in Table 2.1. Responses for municipal respondents are summarized in Table 2.2, and agricultural sub-groups in Table 2.3.

Table 2.1 All Responses (n = 60)

What changes have you witnessed regarding the overall water quality of local streams and lakes? Check only one response.

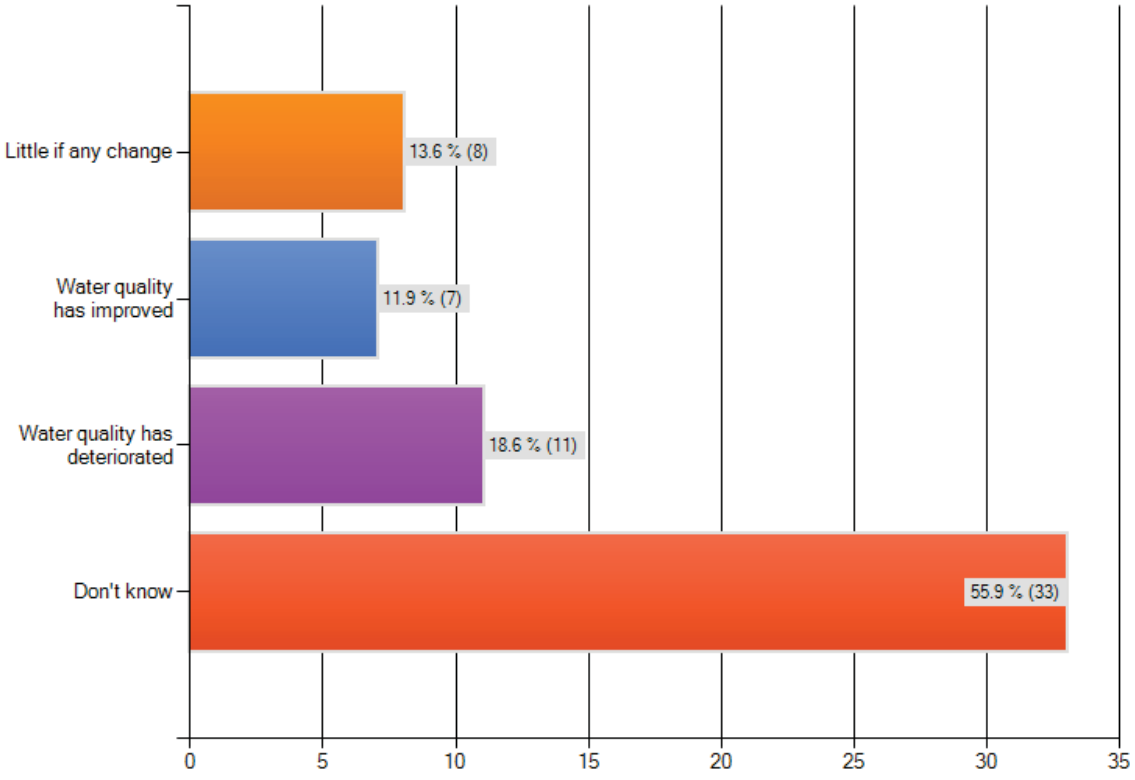

Answered question: 59
Skipped question: 1

A slightly smaller percentage (50%) of municipal employees was uncertain about water quality trends. Twenty percent felt that water quality had deteriorated, again a higher value than the overall sample.

Table 2.2 Responses of Municipal Staff

What changes have you witnessed regarding the overall water quality of local streams and lakes? Check only one response.

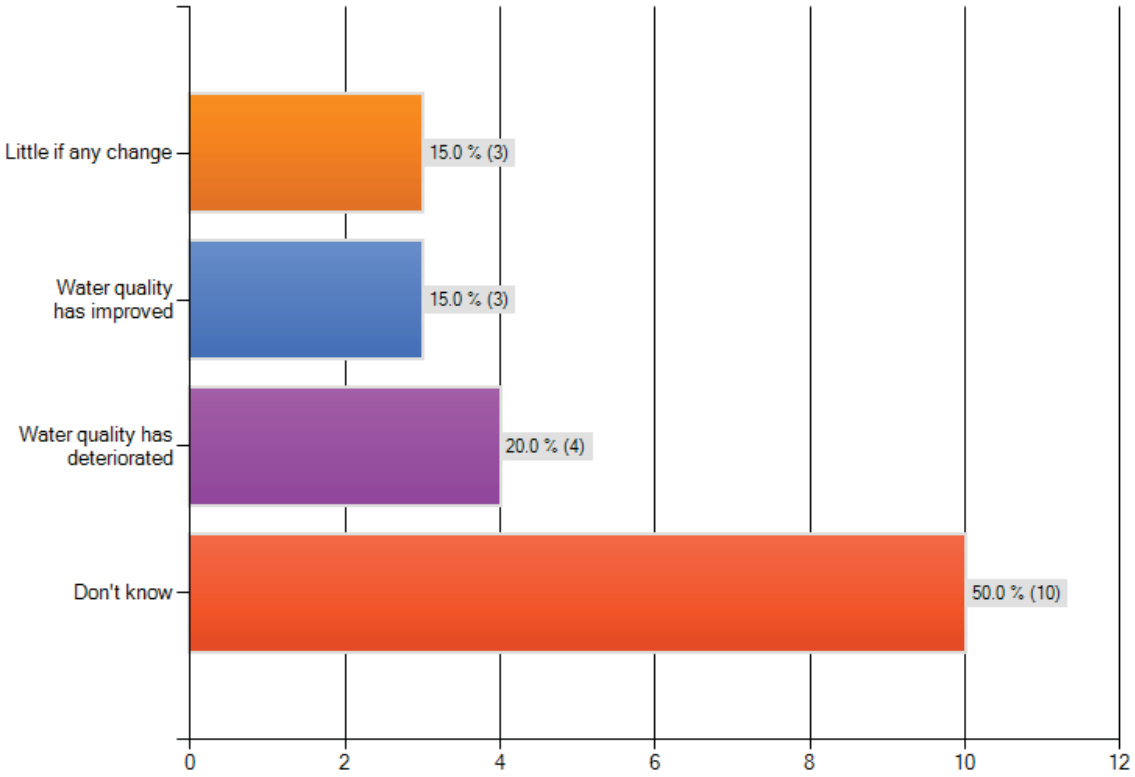

Answered question: 20
Skipped question: 0

Among agricultural groups (Table 2.3 below), there was some variation by type of producer, although it must be cautioned that the sample sizes for each group are too small to be representative. Over half of all respondents in all groups (except horse-related businesses) expressed uncertainty about water quality trends.

Table 2.3: Responses by subgroup
Cross tabulation - Q8 Type of farming operation x Q2 What changes have you witnessed

Elm Creek Water Survey

What changes have you witnessed regarding the overall water quality of local streams and lakes? Check only one response.

	What type of farming operation do you have? Check all that apply.					
	Dairy or beef	Field crops	Both livestock and crops	Horses (hobby or personal use)	Horses (business such as breeding, boarding or training)	Response Totals
Little if any change	0.0% (0)	20.0% (1)	37.5% (3)	18.2% (4)	33.3% (1)	16.7% (6)
Water quality has improved	33.3% (1)	0.0% (0)	12.5% (1)	9.1% (2)	0.0% (0)	11.1% (4)
Water quality has deteriorated	66.7% (2)	20.0% (1)	0.0% (0)	18.2% (4)	33.3% (1)	19.4% (7)
Don't know	0.0% (0)	60.0% (3)	50.0% (4)	54.5% (12)	33.3% (1)	52.8% (19)
Other (please specify)	0 replies	0 replies	0 replies	1 reply	0 replies	1
answered question	3	5	8	22	3	36
					skipped question	1

1 of 1

TAKEAWAY: Survey results show that there is considerable uncertainty among respondents about changes in water quality. Over half (60%) of all sixty respondents responded “Don’t know.” 14% saw little or no change, while 12% said that water quality had improved and 19% felt that water quality had deteriorated. The uncertainty about water quality trends among all groups presents an opportunity for targeted educational messaging aimed at improving respondent knowledge related to the TMDL.

Knowledge of water quality

Q3: What does the term "water quality" mean to you? Check all that apply.
A question asked whether respondents understand basic characteristics of clean water. Combined responses for all responses are given in Table 3.1. Responses for municipal respondents are summarized in Table 3.2, and agricultural sub-groups in Table 3.3.

Table 3.1 All responses

What does the term "water quality" mean to you? Check all that apply.

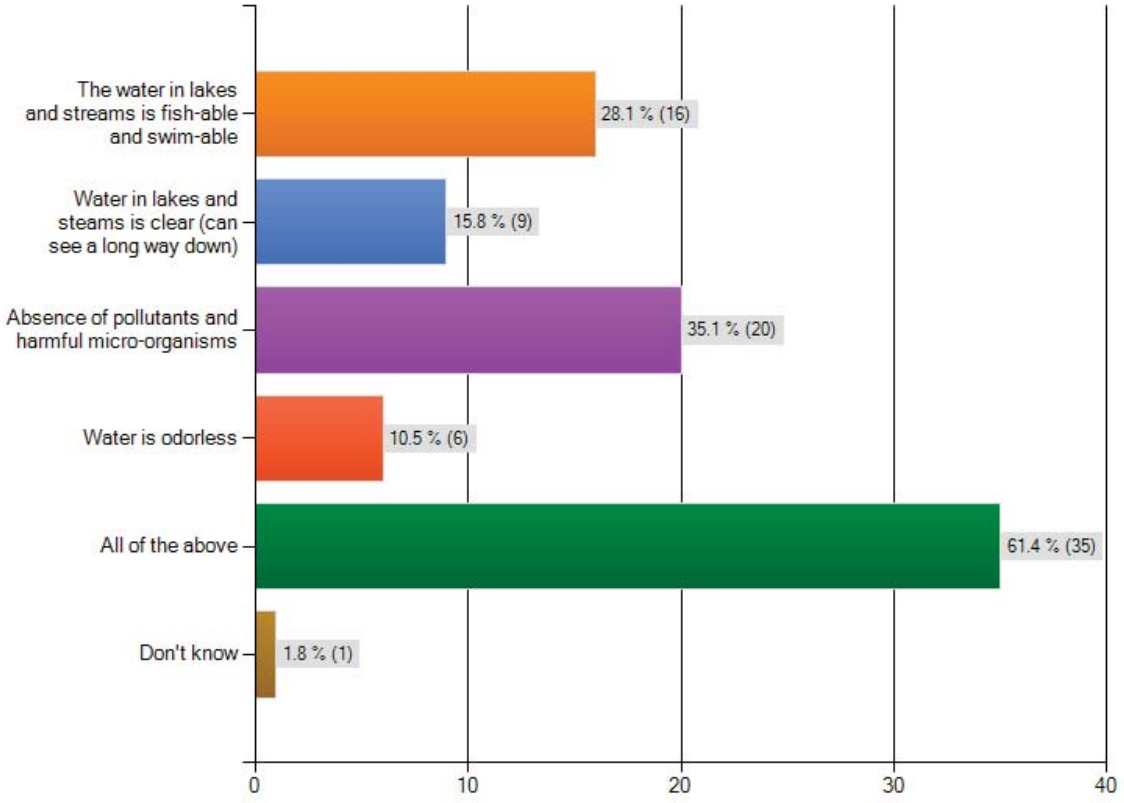

Answered question: 57
Skipped question: 3

Table 3.2 Municipal staff responses

What does the term "water quality" mean to you? Check all that apply.

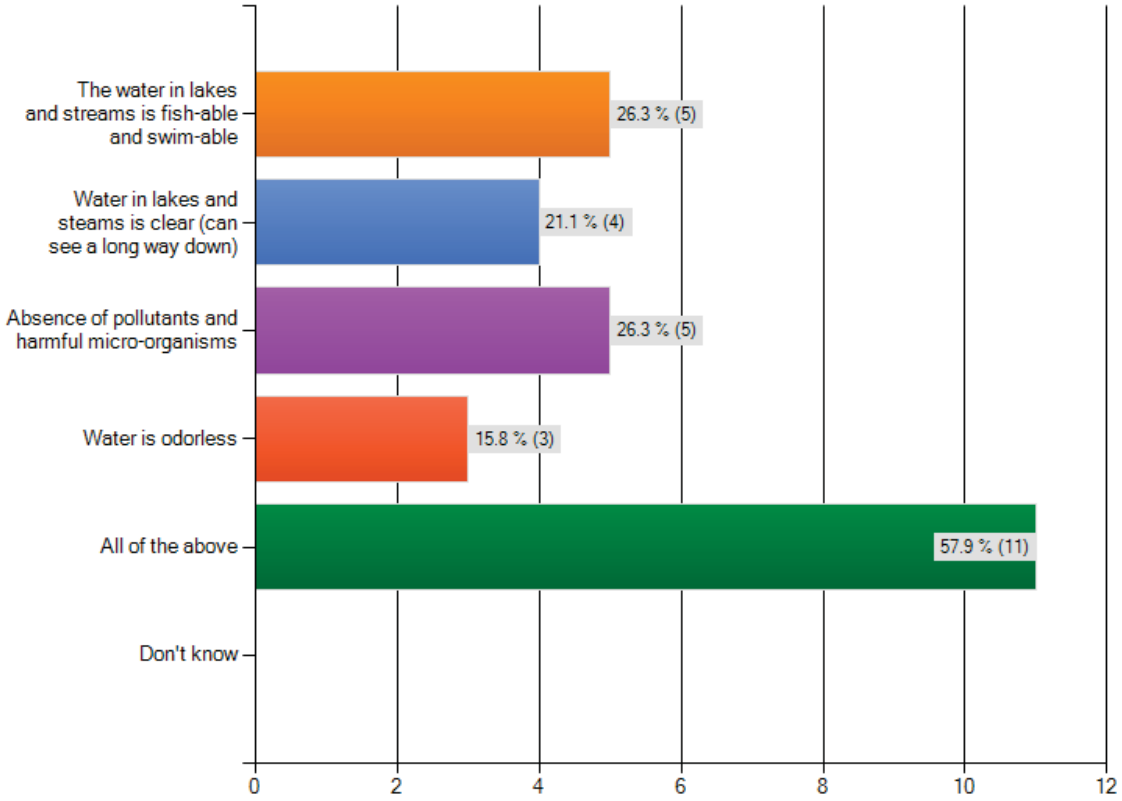

Answered question: 19
Skipped question: 1

Table 3.3: Responses by subgroup
Crosstab Q3 - What does the term water quality mean to you X Q8 Type of farming operation?

Elm Creek Water Survey

What does the term "water quality" mean to you? Check all that apply.

	What type of farming operation do you have? Check all that apply.					
	Dairy or beef	Field crops	Both livestock and crops	Horses (hobby or personal use)	Horses (business such as breeding, boarding or training)	Response Totals
The water in lakes and streams is fish-able and swim-able	33.3% (1)	**60.0% (3)**	25.0% (2)	19.0% (4)	0.0% (0)	22.9% (8)
Water in lakes and steams is clear (can see a long way down)	**66.7% (2)**	40.0% (2)	25.0% (2)	9.5% (2)	0.0% (0)	17.1% (6)
Absence of pollutants and harmful micro-organisms	33.3% (1)	**60.0% (3)**	25.0% (2)	38.1% (8)	0.0% (0)	34.3% (12)
Water is odorless	**66.7% (2)**	0.0% (0)	0.0% (0)	14.3% (3)	0.0% (0)	11.4% (4)
All of the above	**66.7% (2)**	40.0% (2)	**62.5% (5)**	**61.9% (13)**	**100.0% (3)**	**60.0% (21)**
Don't know	0.0% (0)	0.0% (0)	12.5% (1)	0.0% (0)	0.0% (0)	2.9% (1)
Other (please specify)	0 replies	0 replies	0 replies	1 reply	0 replies	1
answered question	3	5	8	21	3	**35**
					skipped question	**2**

1 of 1

Takeaway: In all sampling groups, “all of the above” was the most common response. Only two respondents mentioned “Don’t know.” This suggests that most audiences have a clear and basic understanding and awareness of the characteristics of clean water. This positive understanding is a starting point and building block for educational content (*e.g.* basic characteristics don't need to be reinforced).

Understanding and interest about water quality

A follow-up question asked whether respondents have a general understanding and interest in water quality. Combined responses for all responses are given in Table 4.1. Responses for municipal respondents are summarized in Table 4.2, and agricultural sub-groups in Table 4.3.

Q4: Please indicate your understanding or interest in water quality issues. Check only one response.

Table 4.1: All responses

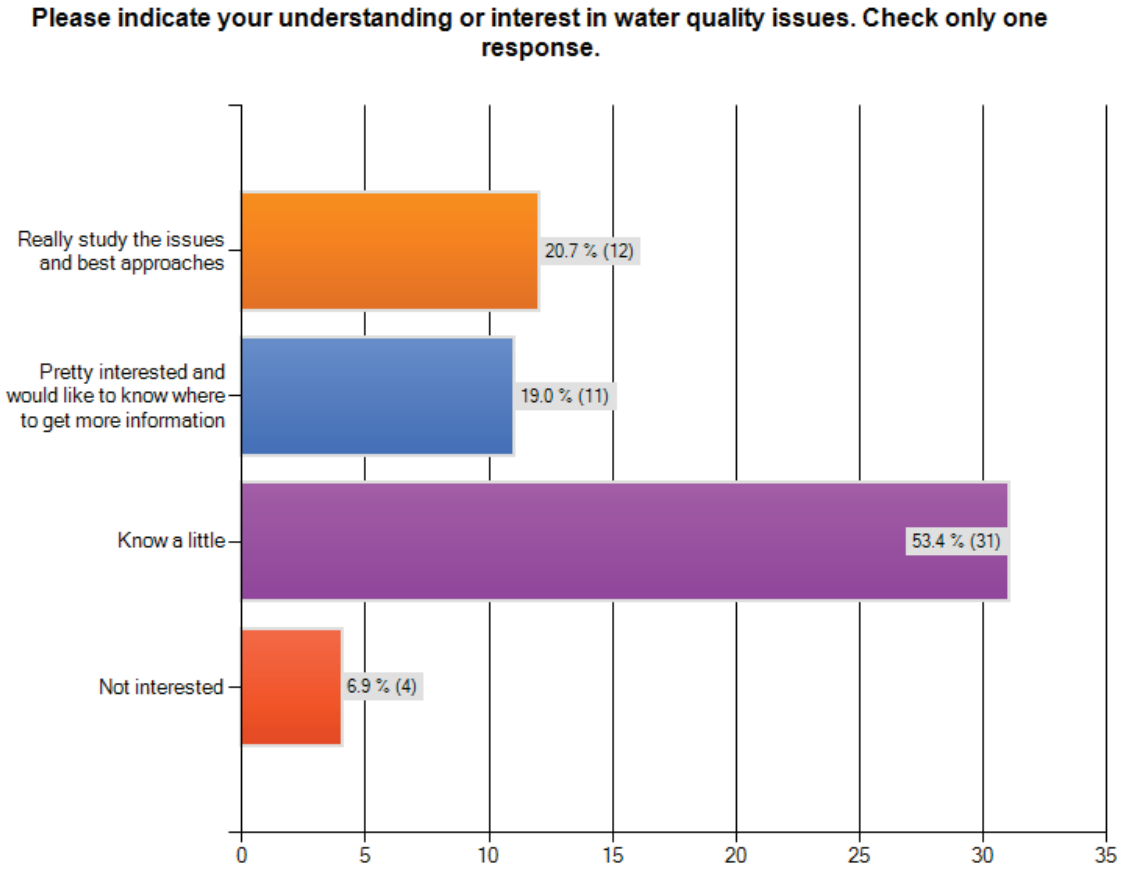

Answered question: 58
Skipped question: 2

Table 4.2: Municipal staff responses

Please indicate your understanding or interest in water quality issues. Check only one response.

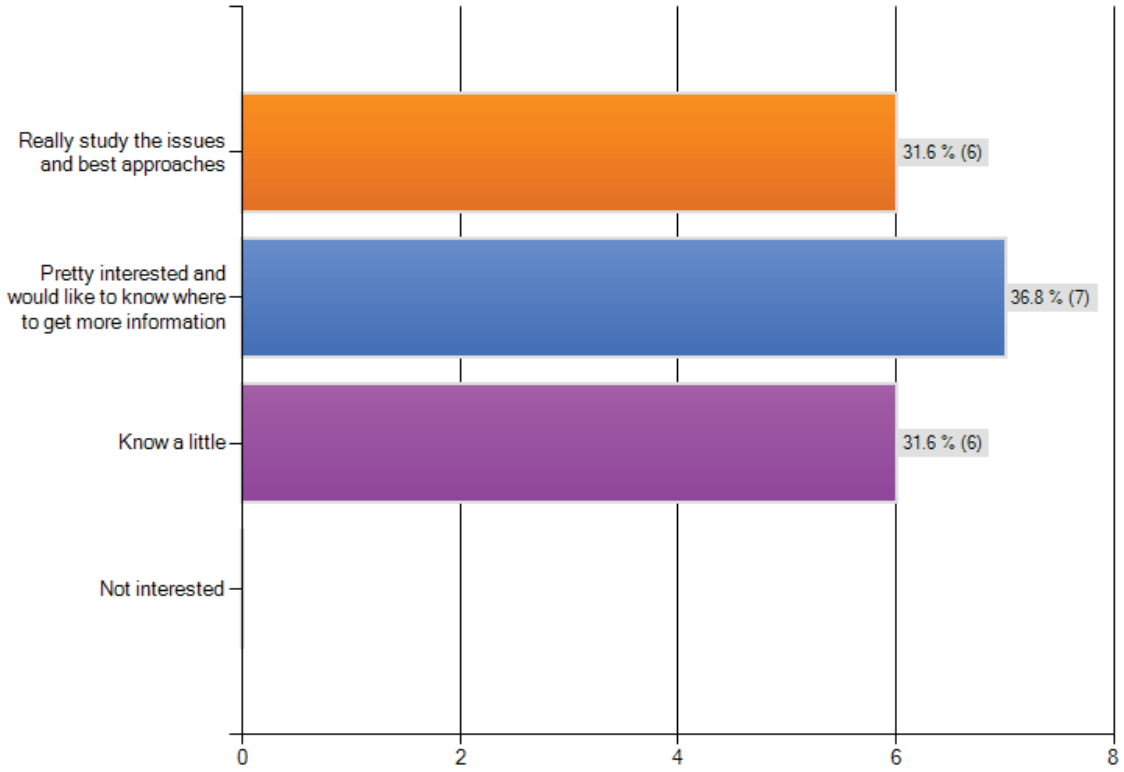

Answered question: 19
Skipped question: 1

Comparing the entire sample with municipal staff, the former has somewhat less understanding and interest in water quality issues than do municipal officials and staff. It is likely that at least some of the municipal respondents deal with water quality in their work. 19% of the entire sample, 39% of the municipal staff and seven agricultural operators would like to know more. Of the agricultural audiences, most know a little but few really study the issues. Only one or two noted that they were not interested.

Table 4.3: Responses by agricultural subgroup
Crosstab (Q4 Indicate your understanding of water issues X type of farming operation)

Elm Creek Water Survey

Please indicate your understanding or interest in water quality issues. Check only one response.

	What type of farming operation do you have? Check all that apply.					
	Dairy or beef	Field crops	Both livestock and crops	Horses (hobby or personal use)	Horses (business such as breeding, boarding or training)	Response Totals
Really study the issues and best approaches	33.3% (1)	20.0% (1)	12.5% (1)	4.5% (1)	0.0% (0)	11.1% (4)
Pretty interested and would like to know where to get more information	0.0% (0)	**40.0% (2)**	25.0% (2)	18.2% (4)	33.3% (1)	19.4% (7)
Know a little	**66.7% (2)**	**40.0% (2)**	**50.0% (4)**	**72.7% (16)**	**66.7% (2)**	**63.9% (23)**
Not interested	0.0% (0)	0.0% (0)	12.5% (1)	4.5% (1)	0.0% (0)	5.6% (2)
Other (please specify)	1 reply	0 replies	1 reply	0 replies	0 replies	2
answered question	3	5	8	22	3	**36**
					skipped question	**1**

1 of 1

TAKEAWAY: Consistent with the responses in Q1, there may be good potential and interest for raising awareness and understanding of local water quality issues on a very basic level. The survey results suggest that educational content might be generally well-received by most people. Such content could feature informative messages about specific local lakes and streams, particularly about different types of wildlife habitats (building on existing behaviors), local wildlife sightings, and linking water quality messages to those habitats.

Awareness of human impacts on water

This question demonstrated that people draw a clear link between human activity and the condition of lakes and rivers. Table 5.1 presents results from all respondents. Table 5.2 shows results from municipal staff and officials, and Table 5.3 breaks down responses among agricultural audiences.

Q5: Do you think there is a connection between people's land use practices and water quality in local lakes and rivers? Check only one response.

Table 5.1: All responses

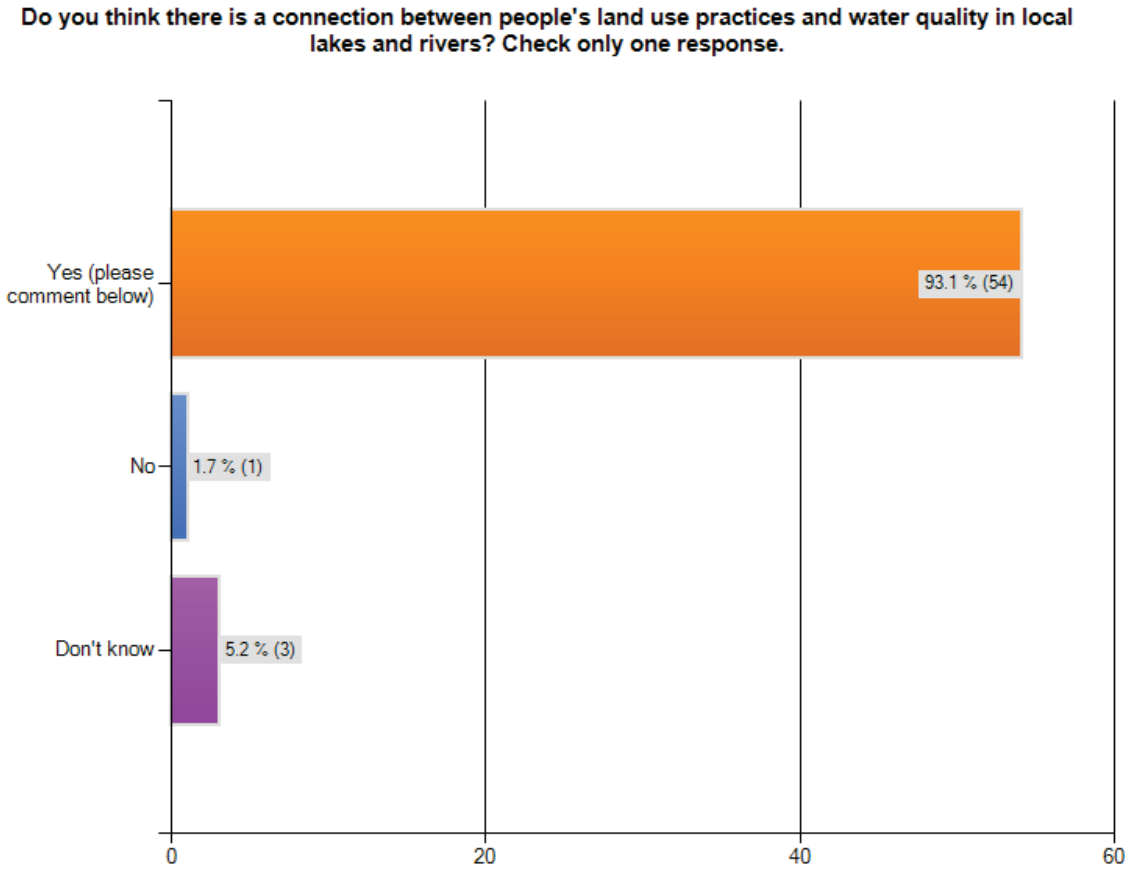

Answered question: 58
Skipped question: 2

Table 5.2: Municipal staff responses

Do you think there is a connection between people's land use practices and water quality in local lakes and rivers? Check only one response.

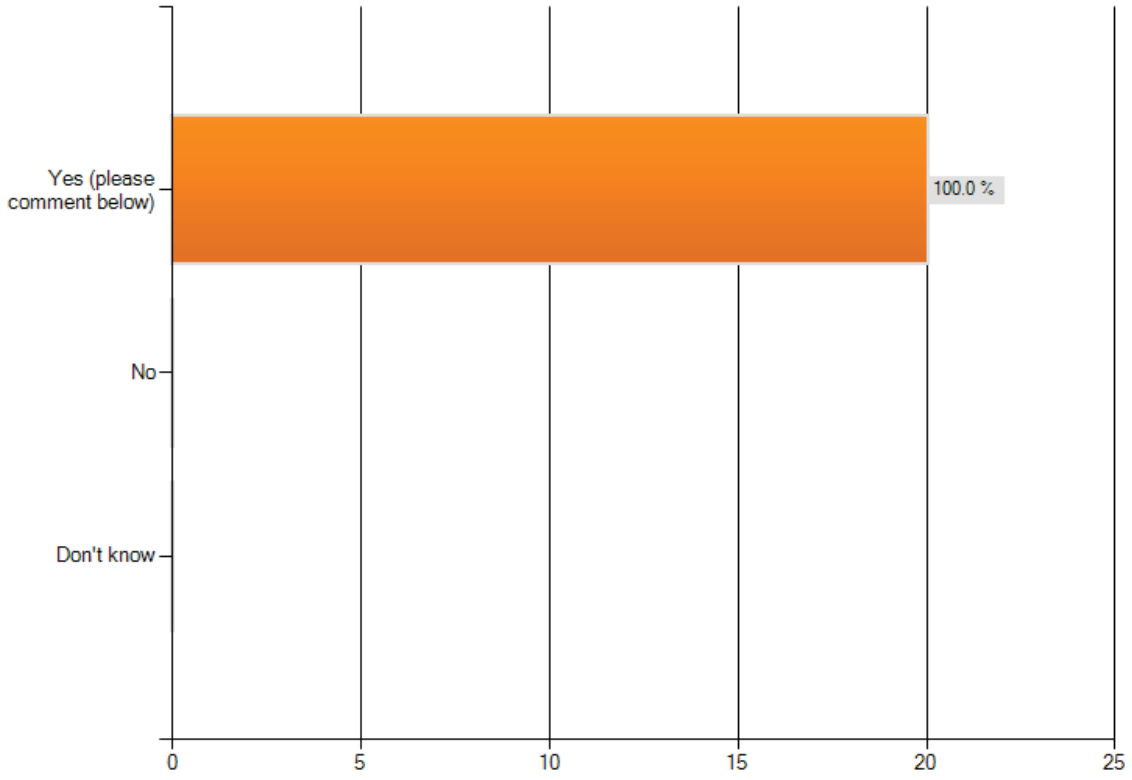

Answered question: 19
Skipped question: 1

Table 5.3 Responses by agricultural sub-group – Crosstab Q5 x Q8

Elm Creek Water Survey

Do you think there is a connection between people's land use practices and water quality in local lakes and rivers? Check only one response.

	What type of farming operation do you have? Check all that apply.					
	Dairy or beef	Field crops	Both livestock and crops	Horses (hobby or personal use)	Horses (business such as breeding, boarding or training)	Response Totals
Yes (please comment below)	100.0% (3)	100.0% (5)	75.0% (6)	100.0% (22)	66.7% (2)	91.7% (33)
No	0.0% (0)	0.0% (0)	0.0% (0)	0.0% (0)	33.3% (1)	2.8% (1)
Don't know	0.0% (0)	0.0% (0)	25.0% (2)	0.0% (0)	0.0% (0)	5.6% (2)
Other (please specify)	2 replies	1 reply	4 replies	11 replies	0 replies	18
answered question	3	5	8	22	3	**36**
					skipped question	**1**

1 of 1

TAKE-AWAY: Responses to Q5 show that all respondents except for very few individuals understand that there is a clear link between human behavior and water quality in local lakes and streams. Of the entire sample, only two people (one a horse business owner) felt that there is no connection; three were uncertain.

Almost all respondents "get" the big picture. Educational content does not need to dwell on this construct because most people already understand the human-water quality link very clearly. However, this could be a departure point upon which to build additional message content.

Knowledge of causes of water quality problems

This question was designed to gauge respondent knowledge about the cause or source of water impairments. Table 6.1 shows responses for all respondents. Table 6.2 shows responses for municipal staff, and Table 6.3 shows responses for agricultural audiences.

Q6: Which of the following has the biggest impact on water quality? Check only one response.

Table 6.1 All responses

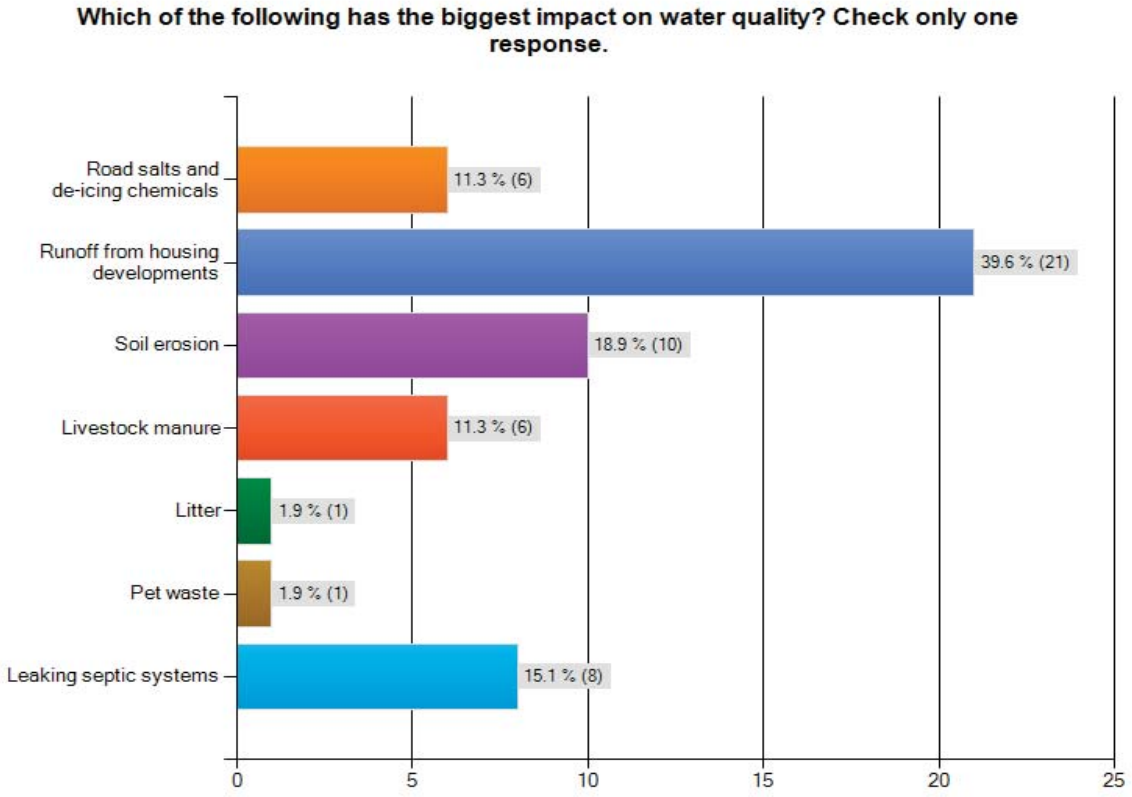

Answered question: 53
Skipped question: 7

Table 6.2 Responses of municipal staff and officials

Which of the following has the biggest impact on water quality? Check only one response.

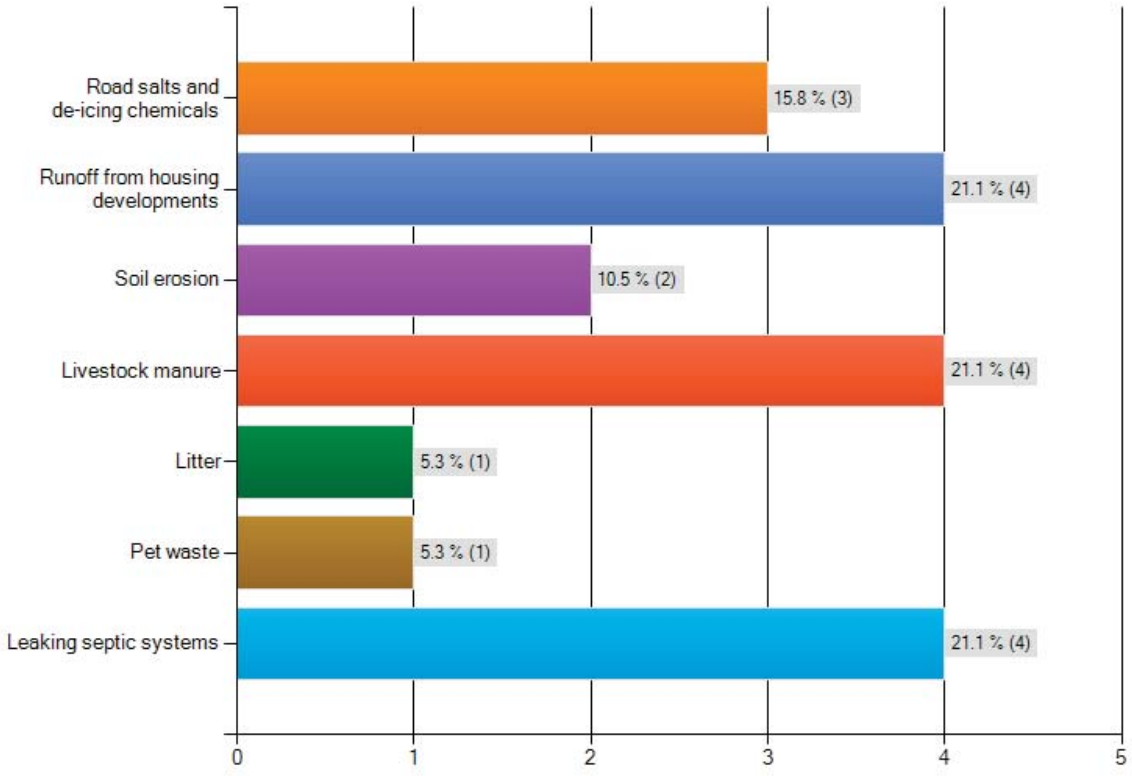

Answered question: 19
Skipped question: 1

Table 6.3 Responses by sub-group – Crosstab Q 6 x Q8

Elm Creek Water Survey

Which of the following has the biggest impact on water quality? Check only one response.

	What type of farming operation do you have? Check all that apply.					
	Dairy or beef	Field crops	Both livestock and crops	Horses (hobby or personal use)	Horses (business such as breeding, boarding or training)	Response Totals
Road salts and de-icing chemicals	0.0% (0)	25.0% (1)	**37.5% (3)**	0.0% (0)	0.0% (0)	12.5% (4)
Runoff from housing developments	**66.7% (2)**	**50.0% (2)**	**37.5% (3)**	**57.9% (11)**	0.0% (0)	**46.9% (15)**
Soil erosion	0.0% (0)	25.0% (1)	12.5% (1)	15.8% (3)	**66.7% (2)**	21.9% (7)
Livestock manure	0.0% (0)	0.0% (0)	12.5% (1)	15.8% (3)	33.3% (1)	9.4% (3)
Litter	0.0% (0)	0.0% (0)	0.0% (0)	0.0% (0)	0.0% (0)	0.0% (0)
Pet waste	0.0% (0)	0.0% (0)	0.0% (0)	0.0% (0)	0.0% (0)	0.0% (0)
Leaking septic systems	33.3% (1)	0.0% (0)	0.0% (0)	10.5% (2)	0.0% (0)	9.4% (3)
Other (please specify)	0 replies	1 reply	0 replies	3 replies	1 reply	5
answered question	3	4	8	19	3	**32**
					skipped question	**5**

1 of 1

These results show a clear need and opportunity for education about manure as a pollutant source in this watershed. The majority of all respondents believe that runoff from housing developments has the greatest impact on water quality, possibly due to visible ex-urban development and growth. Very few respondents flagged manure as having the greatest impact on water quality in this watershed, which most ranked as third or fourth in terms of impact. Furthermore, livestock operators do not seem to be aware that manure can impact local water resources, and (as noted below) most believe that they are already doing the right thing.

Take-away: A strong educational and outreach strategy should be developed with broad targeting, emphasizing the impacts of manure on clean water. This should not be done in a putative or scolding manner, as it will likely turn off message recipients. The message content and medium should be carefully designed and pre-tested to ensure that it is effective and positively received.

Responsibility for water quality

An attitudes question was then posed about responsibility for water quality, to gauge whether respondents have a sense of personal responsibility. Responses for the overall sample are presented in Table 7.1. Municipal staff responses are found in Table 7.2. Agricultural producers are summarized in Table 7.3.

Q7: Who is responsible for improving water quality? Check all that apply

Table 7.1: All Responses

Who is responsible for improving water quality? Check all that apply.

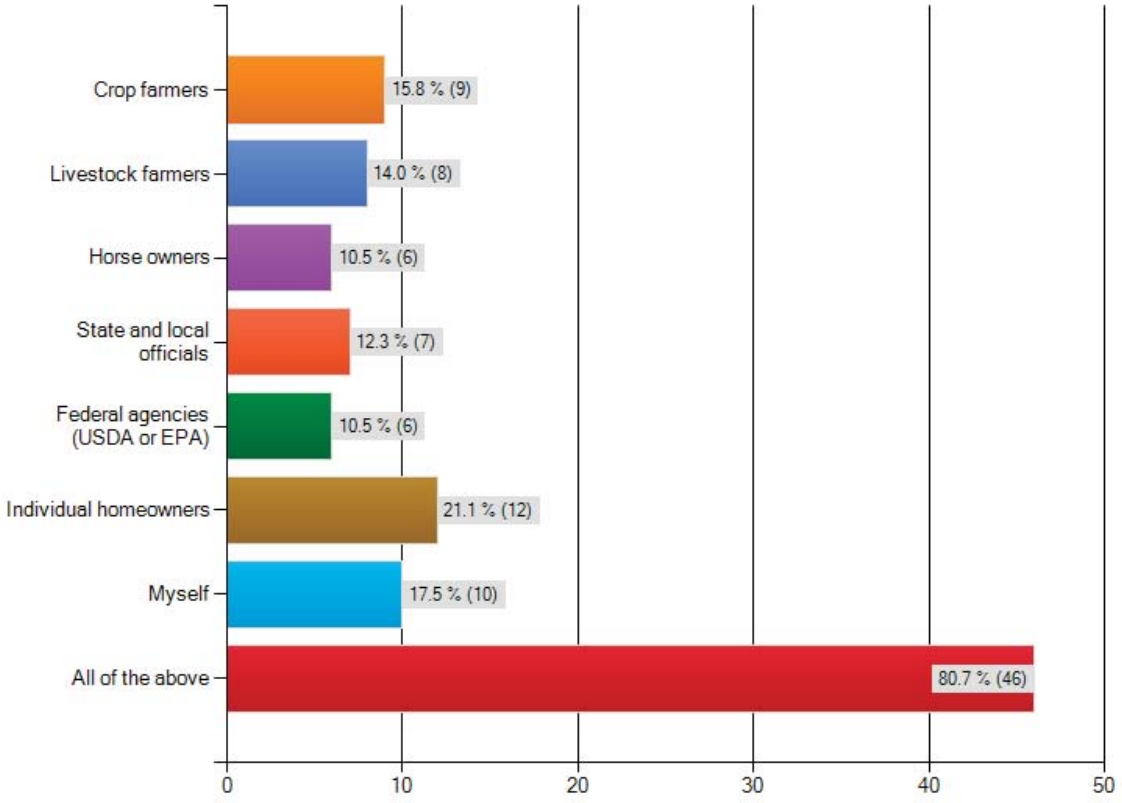

Answered question: 57
Skipped question: 3

Table 7.2 Municipal responses

Who is responsible for improving water quality? Check all that apply.

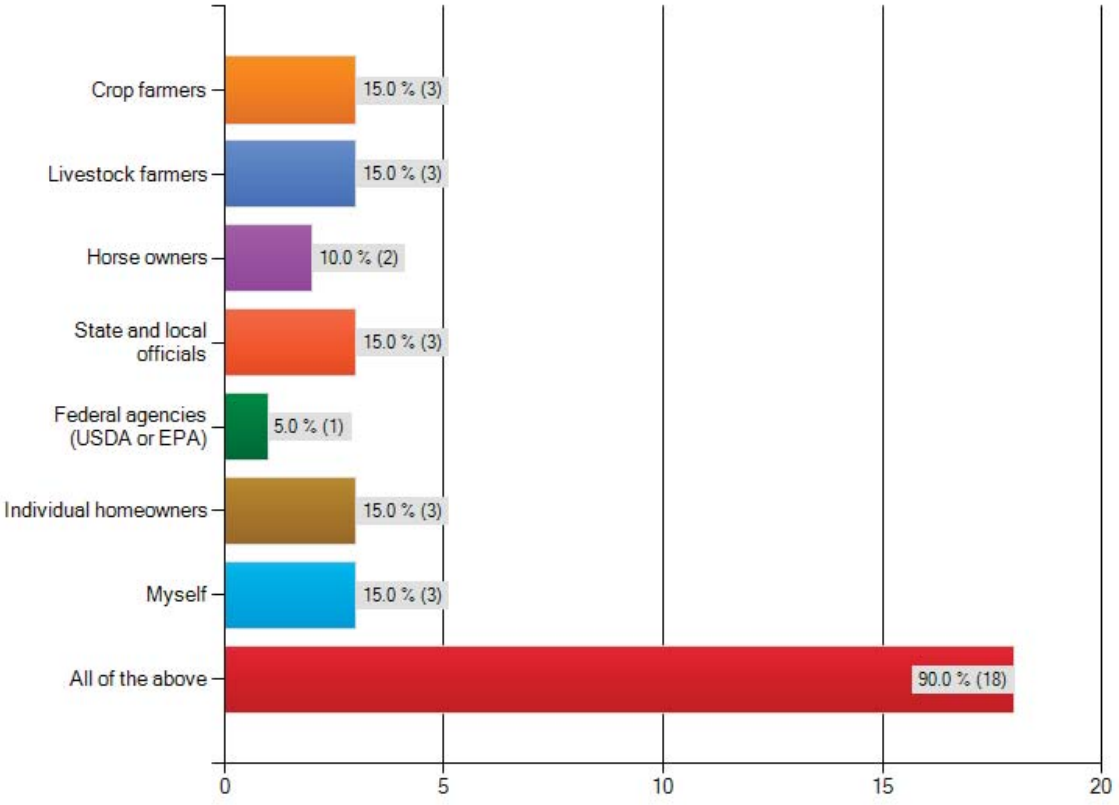

Answered question: 20
Skipped question: 0

Table 7.3 Responses by subgroup – Crosstabs Q7 x Q8

Elm Creek Water Survey

Who is responsible for improving water quality? Check all that apply.

	What type of farming operation do you have? Check all that apply.					
	Dairy or beef	Field crops	Both livestock and crops	Horses (hobby or personal use)	Horses (business such as breeding, boarding or training)	Response Totals
Crop farmers	0.0% (0)	0.0% (0)	0.0% (0)	20.0% (4)	0.0% (0)	11.8% (4)
Livestock farmers	0.0% (0)	0.0% (0)	0.0% (0)	15.0% (3)	0.0% (0)	8.8% (3)
Horse owners	0.0% (0)	0.0% (0)	0.0% (0)	10.0% (2)	0.0% (0)	5.9% (2)
State and local officials	0.0% (0)	0.0% (0)	0.0% (0)	10.0% (2)	0.0% (0)	5.9% (2)
Federal agencies (USDA or EPA)	0.0% (0)	0.0% (0)	12.5% (1)	10.0% (2)	0.0% (0)	8.8% (3)
Individual homeowners	33.3% (1)	0.0% (0)	12.5% (1)	25.0% (5)	0.0% (0)	20.6% (7)
Myself	0.0% (0)	0.0% (0)	0.0% (0)	25.0% (5)	0.0% (0)	14.7% (5)
All of the above	**66.7% (2)**	**100.0% (5)**	**75.0% (6)**	**75.0% (15)**	**100.0% (3)**	**76.5% (26)**
Other (please specify)	0 replies	1 reply	0 replies	0 replies	0 replies	1
answered question	3	5	8	20	3	**34**
					skipped question	**3**

1 of 1

TAKEAWAY: This is generally a positive finding with implications for civic engagement. Responses to this question show that almost all respondents believe that everyone is responsible for water quality. However, individual responsibility does not rank highly compared with other options, especially among agricultural respondents. A critical challenge will be to foster a sense of personal responsibility for water quality, especially for agricultural operators.

Types of agricultural operations

Q8 was essentially a sampling question to determine the numbers of respondents who are beef/dairy farmers, crop farmers, and horse owners. The results of this question were used to cross-tabulate responses of the agricultural audience for the remainder of questions in this survey. Table 8.1 summarizes results for all respondents, while Table 8.2 gives results for municipal officials and staff.

Q8: What type of farming operation do you have? Check all that apply.

Table 8.1 All responses

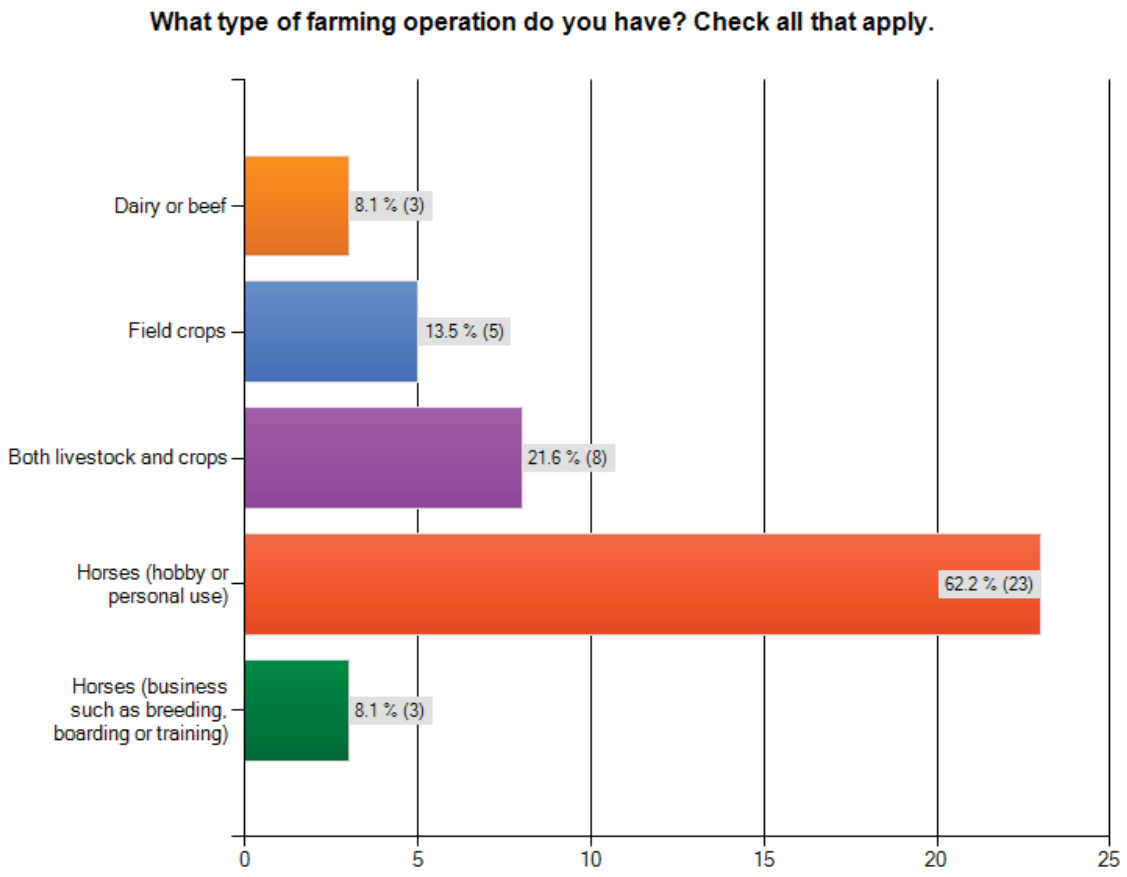

Answered question: 37
Skipped question: 23

Table 8.2 Responses of municipal staff/officials

What type of farming operation do you have? Check all that apply.

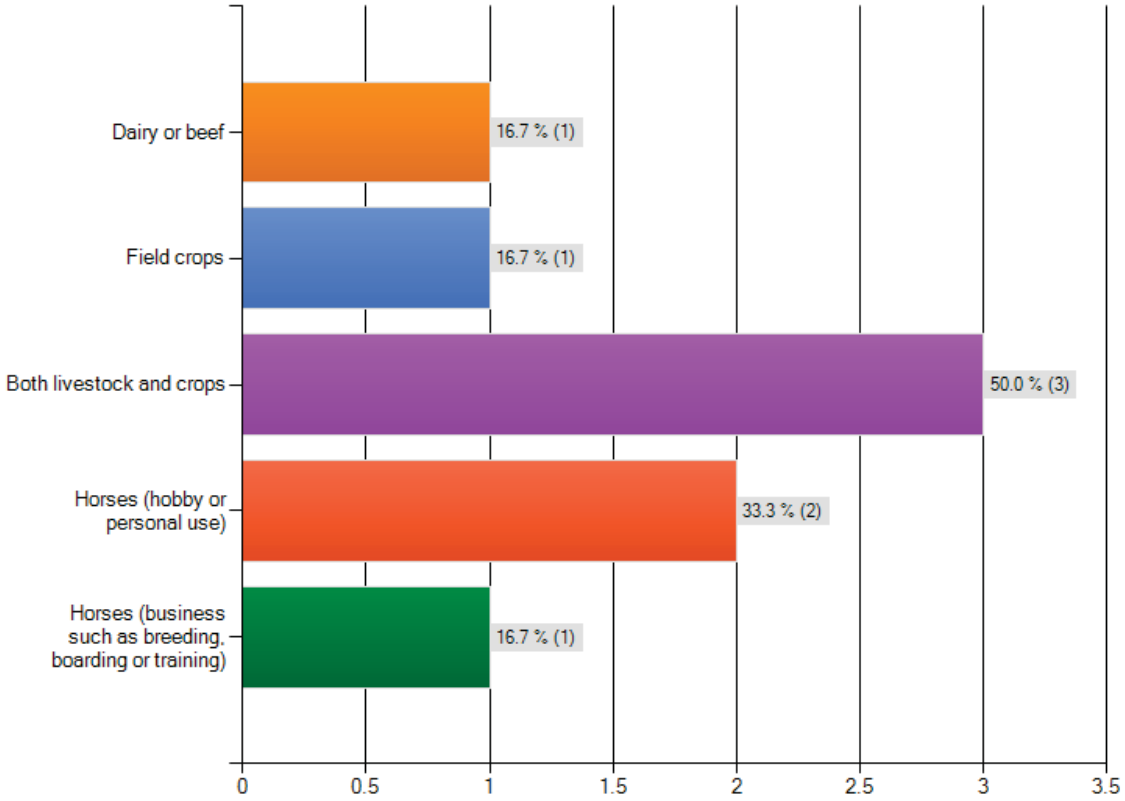

Answered question: 6
Skipped question: 14

Of note, six municipal staff members or officials are also livestock operators or crop producers. It cannot be determined whether these respondents live within the boundaries of ECWMC.

Type of agricultural livelihood

Q9 asked whether operators own or rent their farm, and whether farming is a livelihood or hobby. Table 9.1 below summarizes results for all respondents. Table 9.2 gives results for municipal staff and officials. Table 9.3 summarizes results for agricultural operators.

Q9: How would you characterize your operation? Check all that apply.

Table 9.1 All responses

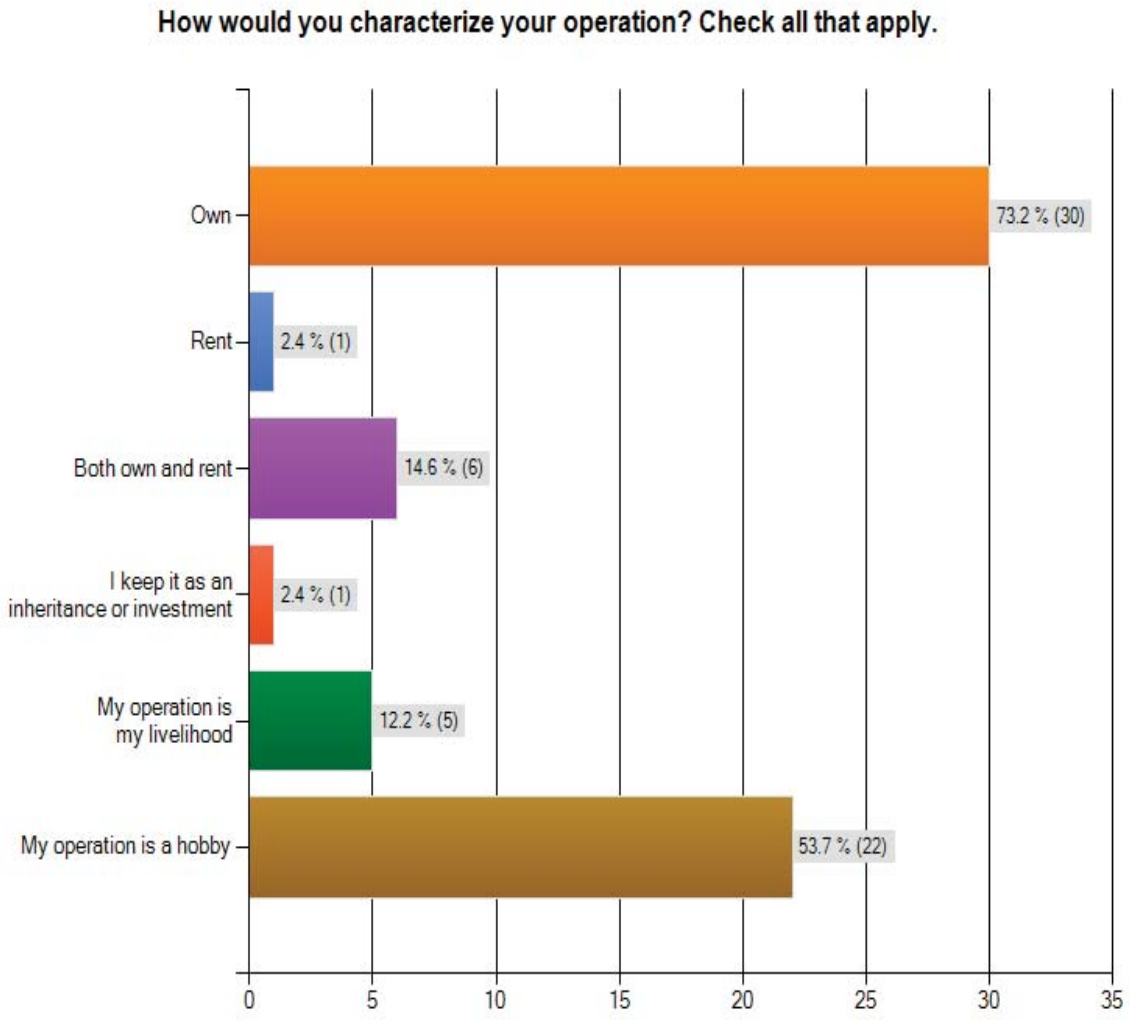

Answered question: 41
Skipped question: 19

Table 9.2 Responses of municipal staff and officials

How would you characterize your operation? Check all that apply.

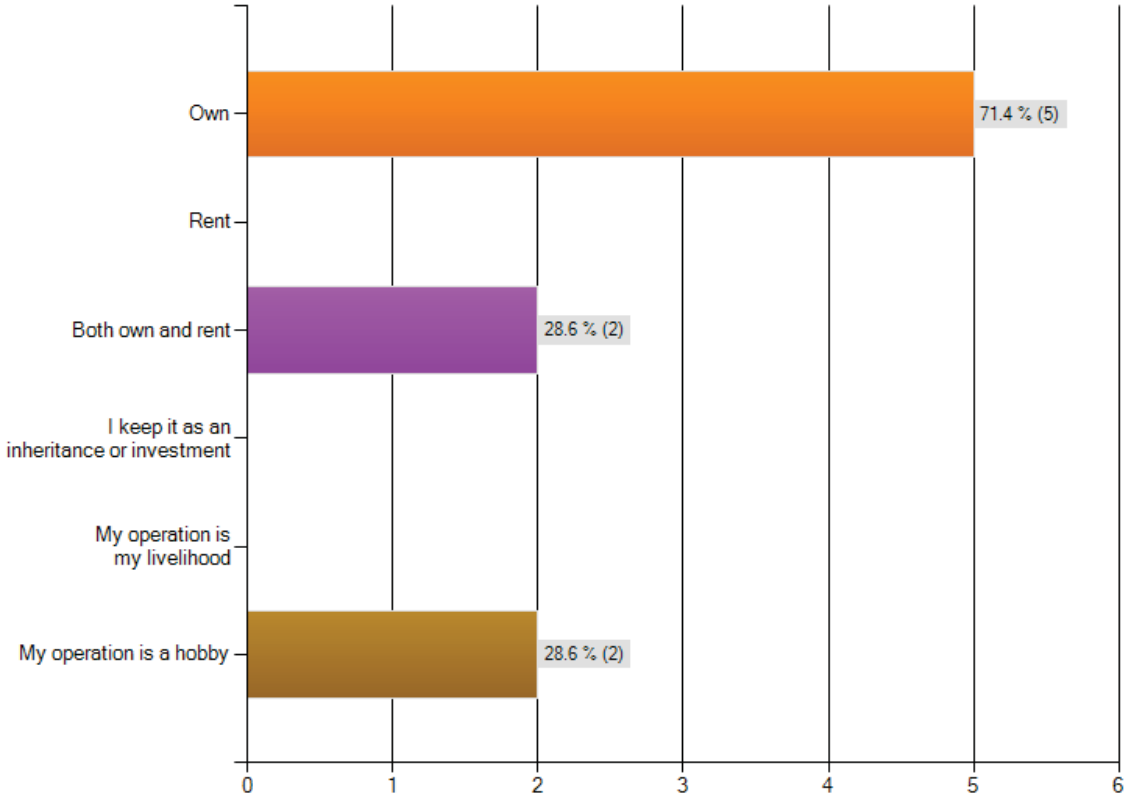

Answered question: 7
Skipped question: 13

Table 9.3 Responses by subgroup – Crosstab Q 8 x Q9

Elm Creek Water Survey

How would you characterize your operation? Check all that apply.

	What type of farming operation do you have? Check all that apply.					
	Dairy or beef	Field crops	Both livestock and crops	Horses (hobby or personal use)	Horses (business such as breeding, boarding or training)	Response Totals
Own	**66.7% (2)**	**80.0% (4)**	37.5% (3)	**78.3% (18)**	**66.7% (2)**	**70.3% (26)**
Rent	0.0% (0)	20.0% (1)	0.0% (0)	0.0% (0)	0.0% (0)	2.7% (1)
Both own and rent	0.0% (0)	20.0% (1)	**62.5% (5)**	4.3% (1)	33.3% (1)	16.2% (6)
I keep it as an inheritance or investment	0.0% (0)	20.0% (1)	0.0% (0)	0.0% (0)	0.0% (0)	2.7% (1)
My operation is my livelihood	33.3% (1)	0.0% (0)	25.0% (2)	4.3% (1)	**66.7% (2)**	13.5% (5)
My operation is a hobby	33.3% (1)	60.0% (3)	25.0% (2)	73.9% (17)	0.0% (0)	56.8% (21)
Other (please specify)	0 replies	0 replies	0 replies	0 replies	0 replies	0
answered question	3	5	8	23	3	**37**
					skipped question	**0**

1 of 1

Takeaway: There is a mix of ownership patterns across these groups. Almost three-fourths of all respondents and municipal staff own their operations. For the sample overall, 54% report that their operation is a hobby, likely reflecting the large number of horse owners in the study area. Results suggest that it may be useful to consider a variety of engagement options and educational content to meet the needs and interests of the different sub-groups.

Use of conservation practices

Respondent use of conservation practices was explored in a series of questions about farming and field practices, manure management and grazing. Many of the questions in the following series (Q10 through Q24) were taken from an earlier KAP study on manure management planning conducted in Rock and Pipestone counties. Results for all respondents are given in Table 10.1 below. Responses for municipal officials and staff are found in Table 10.2. Agricultural audience responses are in Table 10.3.

Q10: What conservation practices do you currently use? Check all that apply.

Table 10.1 All responses

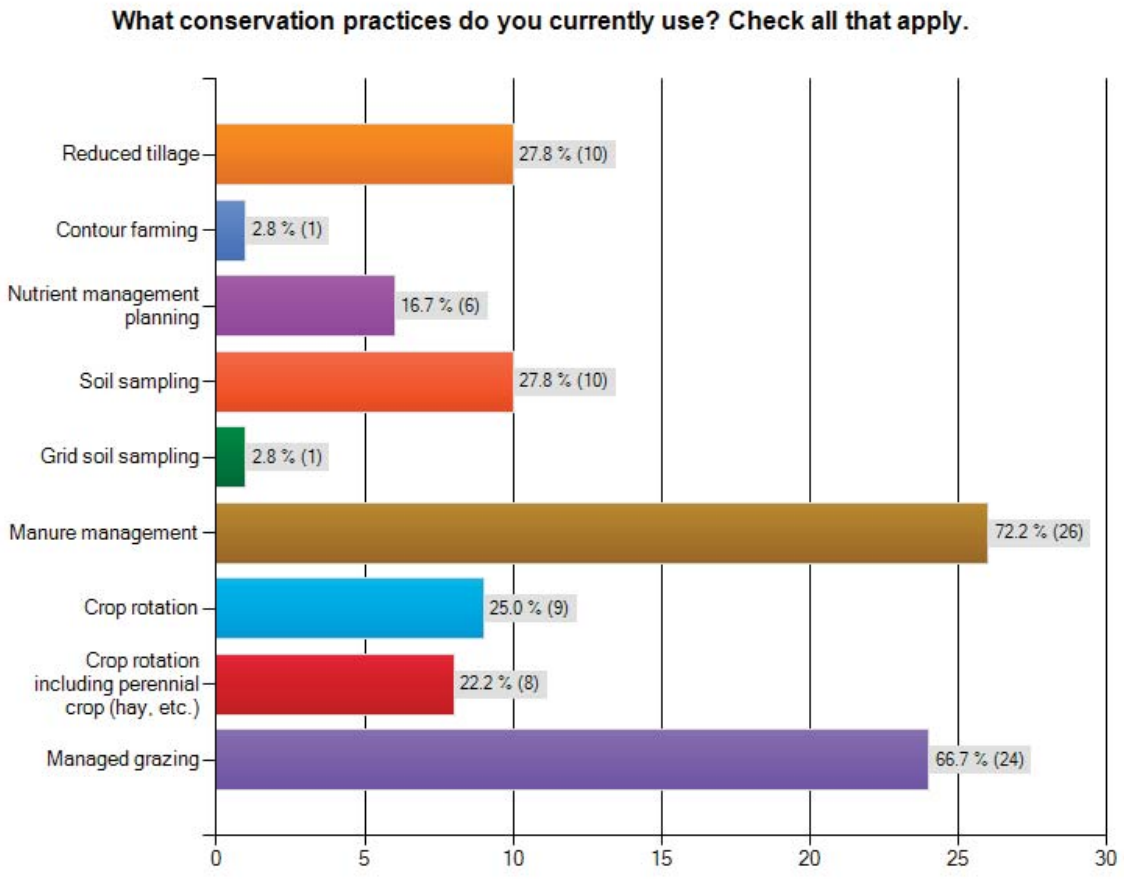

Answered question: 36
Skipped question: 24

Table10.2 Municipal staff and officials

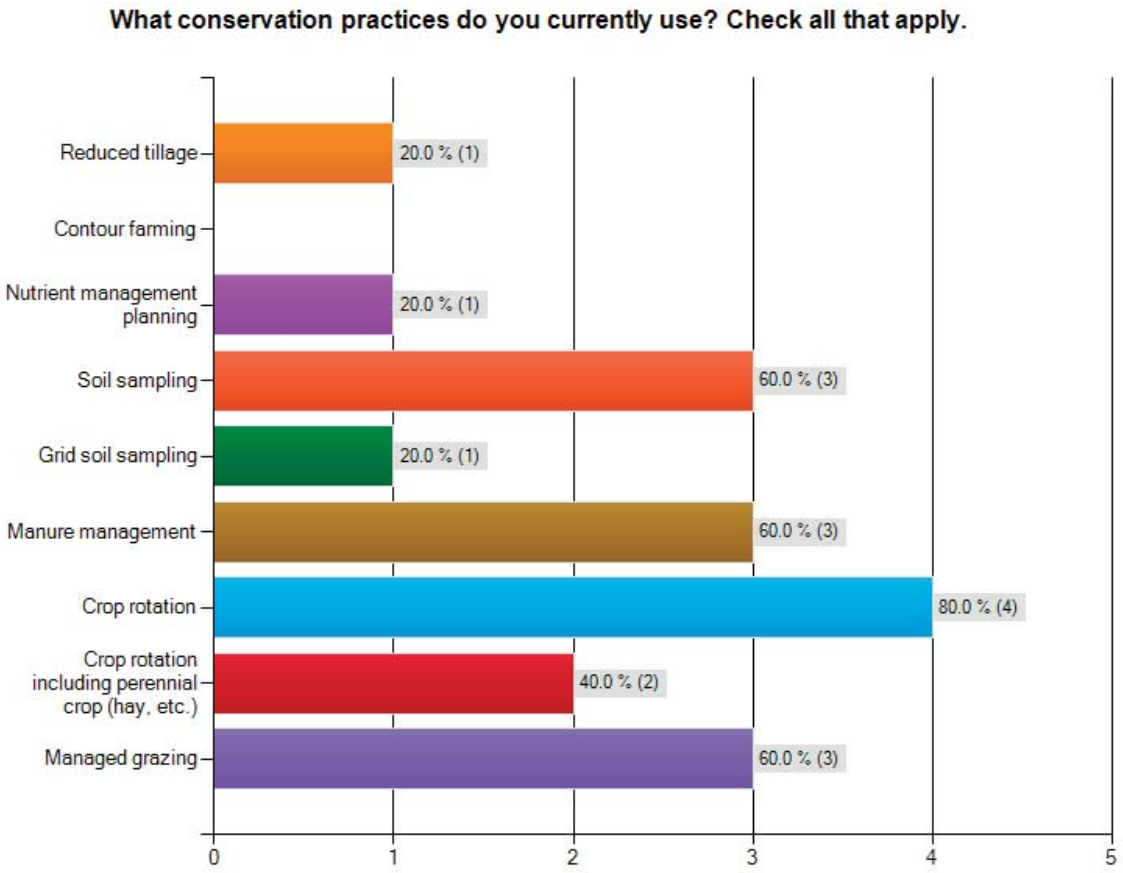

Answered question: 5
Skipped question: 15

Table 10.3 Responses by Subgroup – Crosstab Q 8 x Q10

Elm Creek Water Survey

What conservation practices do you currently use? Check all that apply.

	What type of farming operation do you have? Check all that apply.					
	Dairy or beef	Field crops	Both livestock and crops	Horses (hobby or personal use)	Horses (business such as breeding, boarding or training)	Response Totals
Reduced tillage	33.3% (1)	0.0% (0)	62.5% (5)	30.0% (6)	33.3% (1)	29.4% (10)
Contour farming	0.0% (0)	0.0% (0)	12.5% (1)	0.0% (0)	0.0% (0)	2.9% (1)
Nutrient management planning	0.0% (0)	20.0% (1)	37.5% (3)	10.0% (2)	0.0% (0)	17.6% (6)
Soil sampling	33.3% (1)	**60.0% (3)**	**75.0% (6)**	5.0% (1)	0.0% (0)	29.4% (10)
Grid soil sampling	0.0% (0)	20.0% (1)	0.0% (0)	0.0% (0)	0.0% (0)	2.9% (1)
Manure management	**66.7% (2)**	40.0% (2)	**75.0% (6)**	80.0% (16)	**100.0% (3)**	**70.6% (24)**
Crop rotation	33.3% (1)	40.0% (2)	**75.0% (6)**	5.0% (1)	0.0% (0)	26.5% (9)
Crop rotation including perennial crop (hay, etc.)	33.3% (1)	40.0% (2)	50.0% (4)	10.0% (2)	0.0% (0)	23.5% (8)
Managed grazing	**66.7% (2)**	40.0% (2)	62.5% (5)	**85.0% (17)**	66.7% (2)	67.6% (23)
Other (please specify)	0 replies	1 reply	0 replies	2 replies	0 replies	3
answered question	3	5	8	20	3	**34**
					skipped question	**3**

1 of 2

Results show that manure management and managed grazing are the most commonly reported practices by the overall sample for this question. However, the much smaller sample (n = 5) of municipal staff/officials reported a different pattern, with crop rotation and soil sampling also used by respondents to a significant degree. Agricultural respondents reported a somewhat different pattern, with manure management being the most commonly reported practice (71%), followed by managed grazing (67%), reduced tillage and soil sampling (29% each), crop rotation (24%), nutrient management planning (18%), and contour farming and grid soil sampling (3% each). Among horse owners and horse businesses, the majority practiced manure management, although some comments suggested that the meaning of this term is that manure is allowed to decompose where it falls from the animal. 85% of horse owners report that they practice managed grazing.

Takeaway: most groups report doing at least some best management practice (BMP), but there is considerable room to do more. Among horse owners, there appears to be a lack of knowledge about various BMPs.

Timing of primary tillage

Respondents were asked about tillage timing in Question 11. Table 11.1 shows answers for all respondents. Table 11.2 gives results for municipal staff and officials. Table 11.3 gives results for agricultural audiences.

Q11: When do you typically do your primary tillage? Check only one response.

Table 11.1: All responses

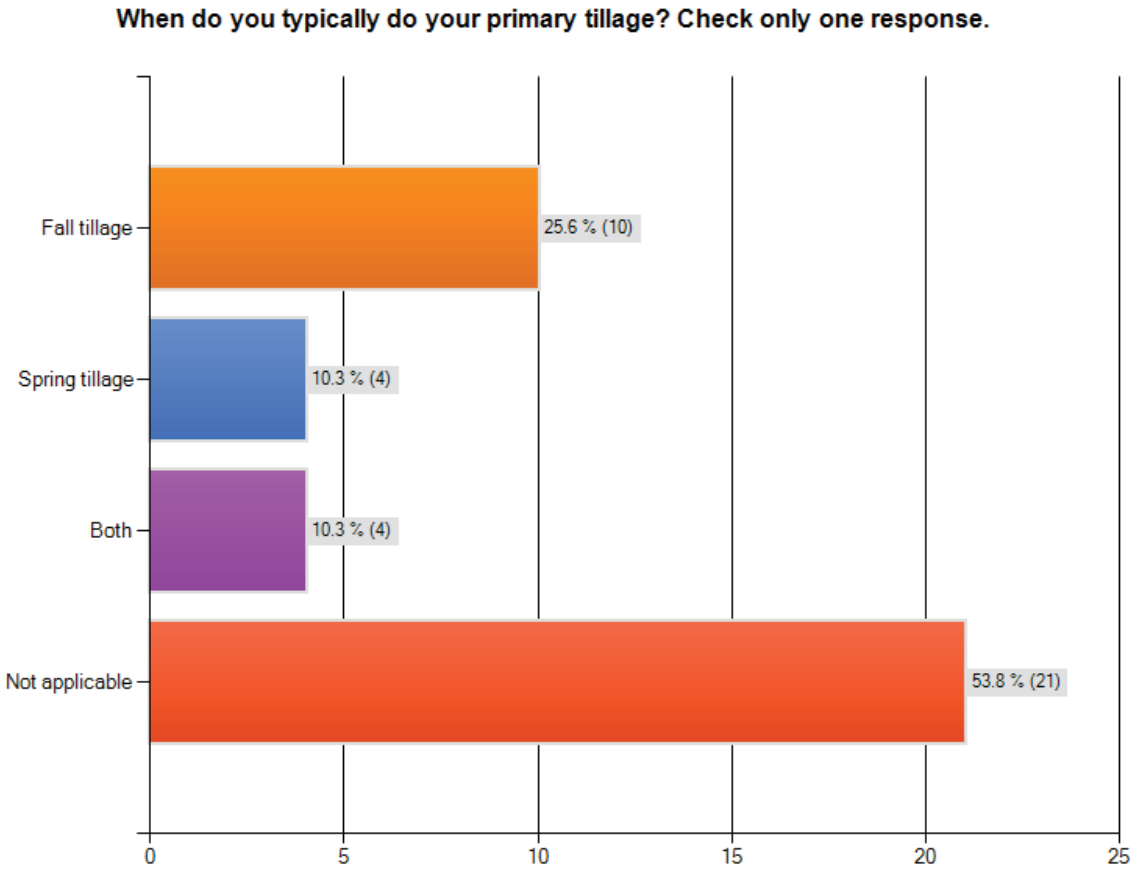

Answered question: 39
Skipped question: 21

Table 11.2 Municipal officials and staff

When do you typically do your primary tillage? Check only one response.

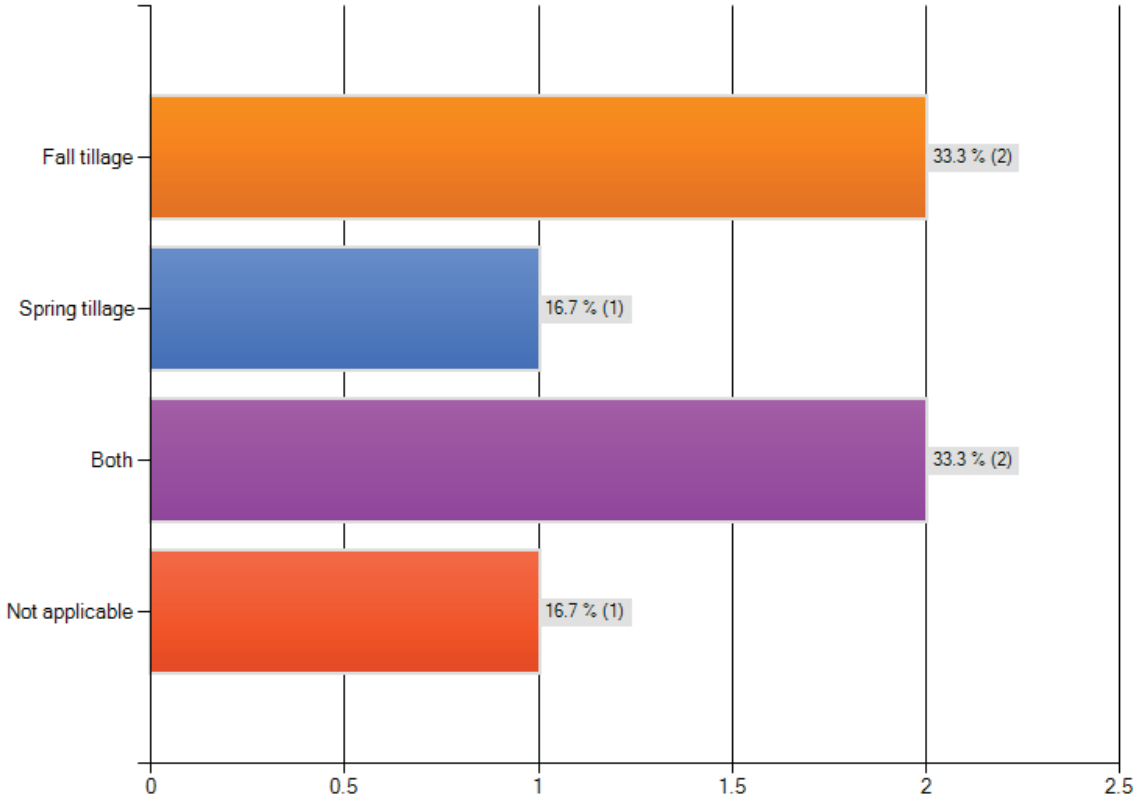

Answered question: 6
Skipped question: 14

Table 11.3 Agricultural audiences (Response by subgroup – Crosstab Q 11 x Q 8)

Elm Creek Water Survey

When do you typically do your primary tillage? Check only one response.

	What type of farming operation do you have? Check all that apply.					
	Dairy or beef	Field crops	Both livestock and crops	Horses (hobby or personal use)	Horses (business such as breeding, boarding or training)	Response Totals
Fall tillage	**33.3% (1)**	**60.0% (3)**	**75.0% (6)**	4.5% (1)	0.0% (0)	27.8% (10)
Spring tillage	**33.3% (1)**	20.0% (1)	12.5% (1)	9.1% (2)	0.0% (0)	8.3% (3)
Both	0.0% (0)	20.0% (1)	0.0% (0)	13.6% (3)	0.0% (0)	11.1% (4)
Not applicable	**33.3% (1)**	0.0% (0)	12.5% (1)	**72.7% (16)**	**100.0% (3)**	**52.8% (19)**
Other (please specify)	1 reply	0 replies	0 replies	0 replies	0 replies	1
answered question	3	5	8	22	3	**36**
					skipped question	**1**

1 of 1

Take-away: Fall tillage was the most common response in the overall sample. Municipal staff tends to do both fall and spring tillage. Among the small sample of agricultural producers, dairy and beef respondents (n = 3) do both fall and spring tillage. Field crop farmers and both livestock/crop producers tend to do fall tillage. Very few (n = 4) of the horse owners or horse business operators do any tillage, and they report doing both fall and spring tillage. 73% of horse operators do no tillage.

Crop residue

A follow-up question (Q12) asked about the amount of crop residue left on fields. Table 12.1 gives responses for the entire sample. Table 12. 2 shows results for municipal staff and officials. Table 12.3 gives results for agricultural respondents.

Q12: How much crop residue do you leave on the surface in the fall and at planting time? Check only one response.

Table 12:1 All responses

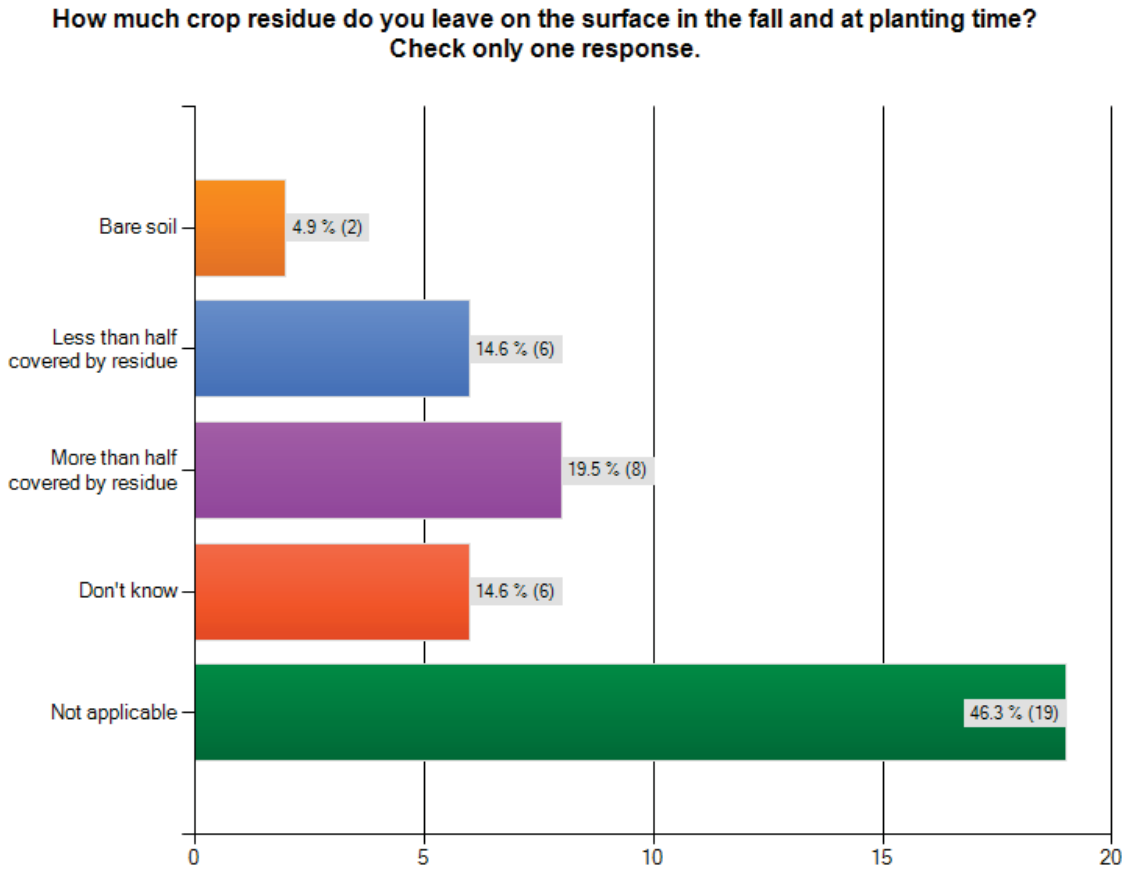

Answered question: 41
Skipped question: 19

Table 12.2 Responses by municipal staff

How much crop residue do you leave on the surface in the fall and at planting time? Check only one response.

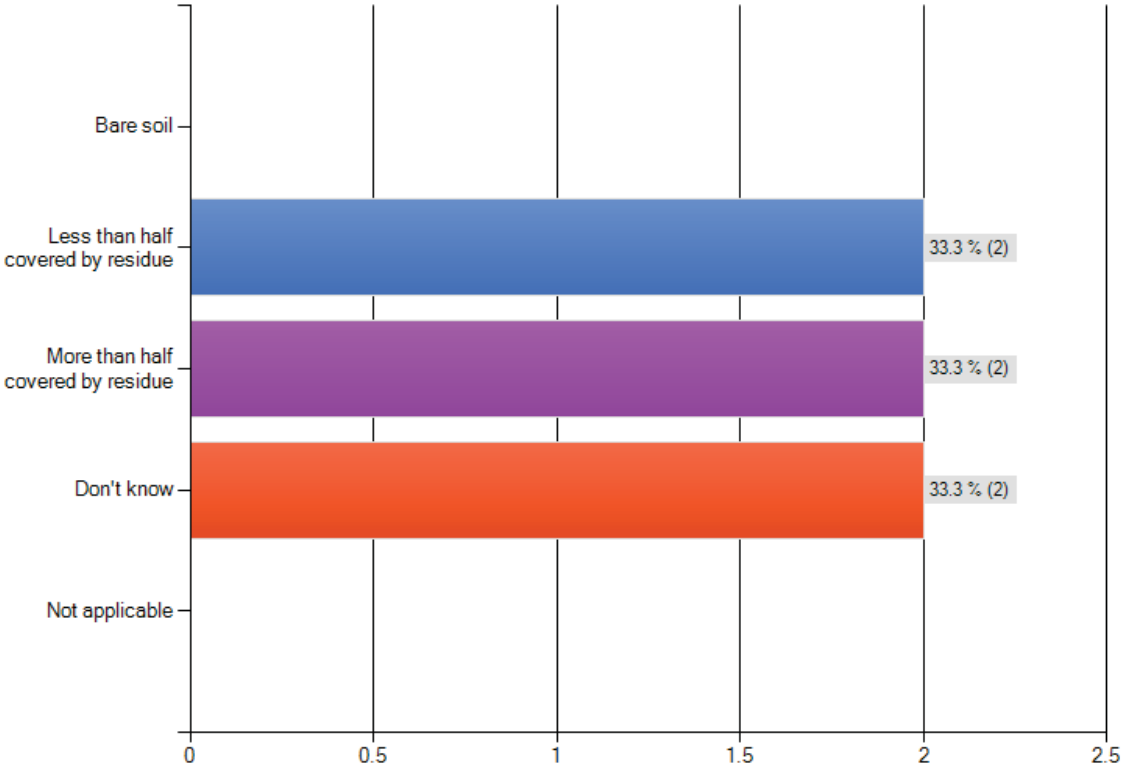

Answered question: 6
Skipped question: 14

Table 12.3 Responses by subgroup – Crosstab Q12 x Q8

Elm Creek Water Survey

How much crop residue do you leave on the surface in the fall and at planting time? Check only one response.

	What type of farming operation do you have? Check all that apply.					
	Dairy or beef	Field crops	Both livestock and crops	Horses (hobby or personal use)	Horses (business such as breeding, boarding or training)	Response Totals
Bare soil	0.0% (0)	0.0% (0)	0.0% (0)	8.7% (2)	0.0% (0)	5.4% (2)
Less than half covered by residue	**66.7% (2)**	20.0% (1)	**37.5% (3)**	4.3% (1)	0.0% (0)	16.2% (6)
More than half covered by residue	33.3% (1)	**40.0% (2)**	**37.5% (3)**	8.7% (2)	0.0% (0)	18.9% (7)
Don't know	0.0% (0)	**40.0% (2)**	25.0% (2)	17.4% (4)	33.3% (1)	16.2% (6)
Not applicable	0.0% (0)	0.0% (0)	0.0% (0)	**60.9% (14)**	**66.7% (2)**	**43.2% (16)**
Other (please specify)	0 replies	1 reply	0 replies	0 replies	0 replies	1
answered question	3	5	8	23	3	**37**
					skipped question	**0**

1 of 1

Takeaway: There is a wide variation among respondents related to this practice, with a fair number of respondents checking "don't know." Lack of awareness for this practice among respondents suggests an opportunity for an educational message to be developed about crop residue.

Timing of manure application

Another question in the series about best management practices asked about the timing of manure application. Table 13.1 gives responses for the entire sample. Table 13. 2 shows results for municipal staff and officials. Table 13.3 gives results for agricultural respondents.

Q13: What time of year do you apply manure to agricultural fields? Check only one response.

Table 13.1 All Responses

What time of year do you apply manure to agricultural fields? Check only one response.

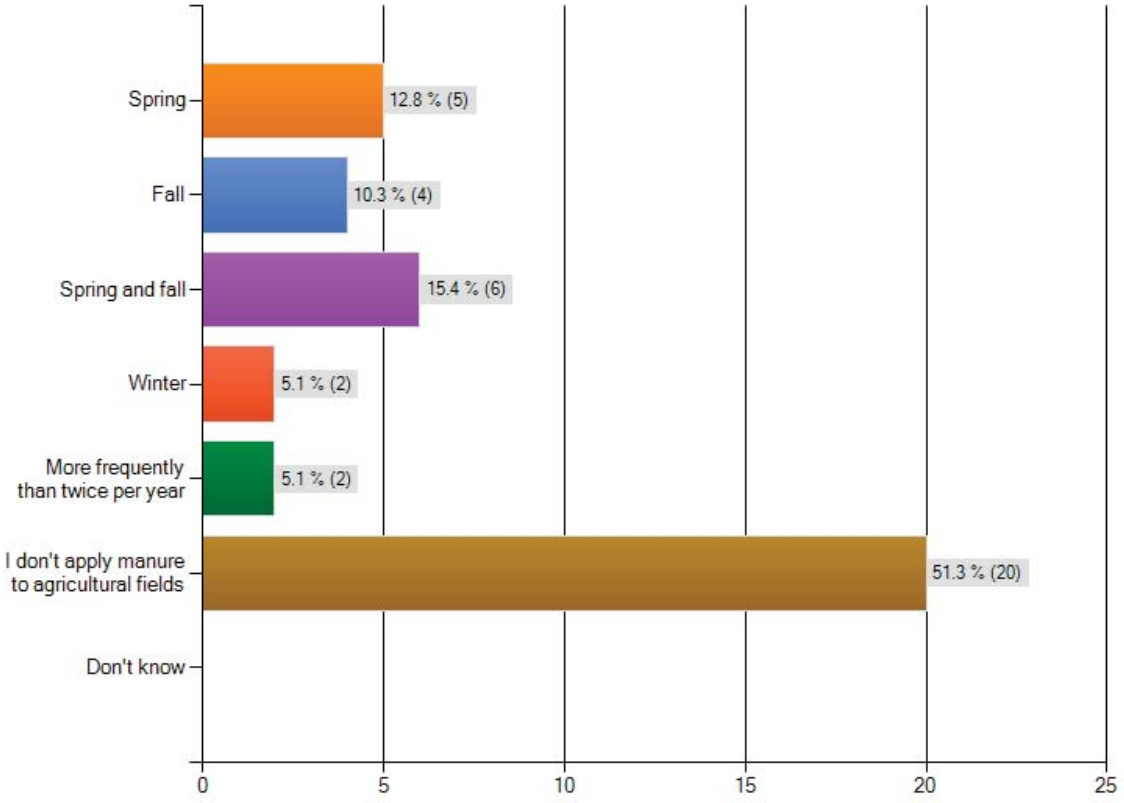

Answered question: 39
Skipped question: 21

Table 13.2 Responses of municipal officials and staff

What time of year do you apply manure to agricultural fields? Check only one response.

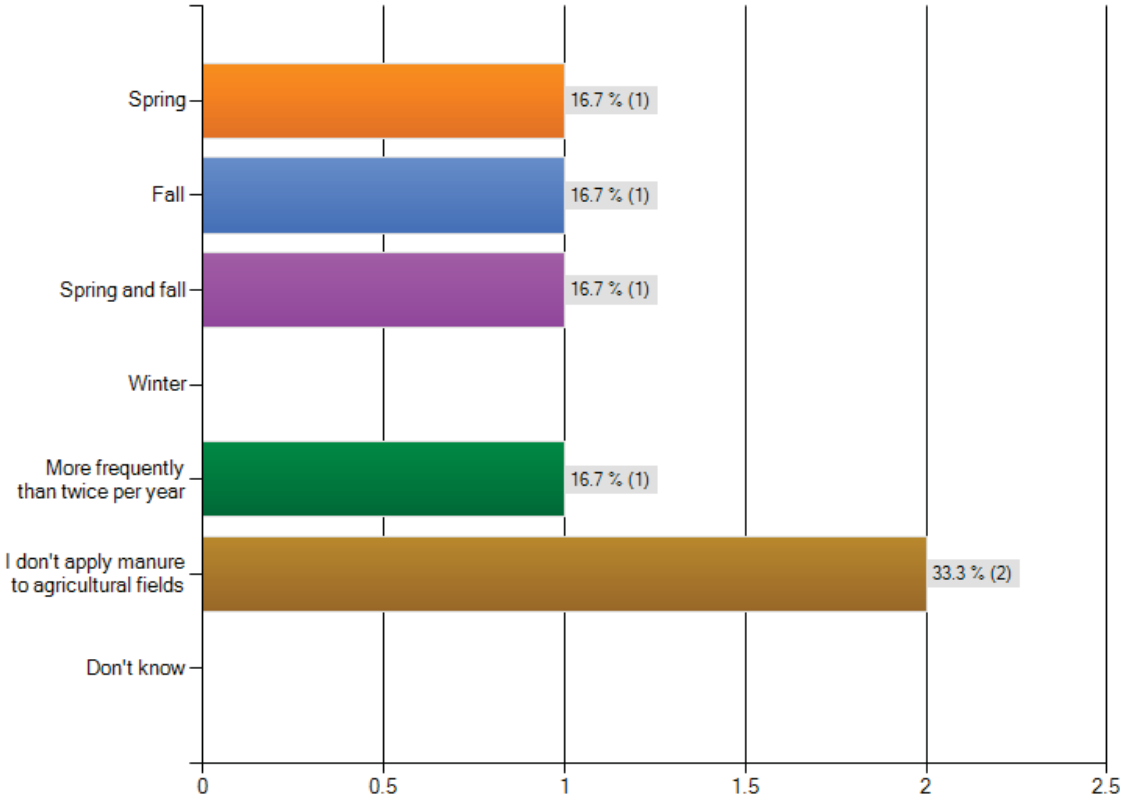

Answered question: 6
Skipped question: 14

Table 13.2 Response by subgroup – Crosstab Q 8 x Q 13

Elm Creek Water Survey

What time of year do you apply manure to agricultural fields? Check only one response.

	What type of farming operation do you have? Check all that apply.					
	Dairy or beef	Field crops	Both livestock and crops	Horses (hobby or personal use)	Horses (business such as breeding, boarding or training)	Response Totals
Spring	**33.3% (1)**	20.0% (1)	25.0% (2)	8.7% (2)	0.0% (0)	13.5% (5)
Fall	0.0% (0)	0.0% (0)	25.0% (2)	8.7% (2)	0.0% (0)	10.8% (4)
Spring and fall	**33.3% (1)**	20.0% (1)	**37.5% (3)**	8.7% (2)	0.0% (0)	16.2% (6)
Winter	0.0% (0)	0.0% (0)	0.0% (0)	4.3% (1)	0.0% (0)	2.7% (1)
More frequently than twice per year	0.0% (0)	0.0% (0)	0.0% (0)	8.7% (2)	0.0% (0)	5.4% (2)
I don't apply manure to agricultural fields	**33.3% (1)**	**60.0% (3)**	12.5% (1)	**60.9% (14)**	**100.0% (3)**	**51.4% (19)**
Don't know	0.0% (0)	0.0% (0)	0.0% (0)	0.0% (0)	0.0% (0)	0.0% (0)
Other (please specify)	0 replies	0 replies	0 replies	1 reply	0 replies	1
answered question	3	5	8	23	3	**37**
					skipped question	**0**

1 of 1

Take-away: Just over half of the entire sample does not apply manure to agricultural fields. Of those that do, most reply doing spring and fall application. Of the four municipal officials applying manure, timing is both spring and fall. The majority (19 respondents, or 51%) of all agricultural groups do not apply manure. Of these, 61% of horse owners do not apply manure. A few individuals report application in spring and fall.

Accounting for soil nutrients

Question 14 in the practices series explores how respondents account for soil nutrients. Table 14.1 gives responses for the entire sample. Table 14. 2 shows results for municipal staff and officials. Table 14.3 gives results for agricultural respondents.

Q14: In applying fertilizer and/or manure to pastures and fields, how do you account for the nutrients already in the soil? Check only one response.

Table 14.1 All responses

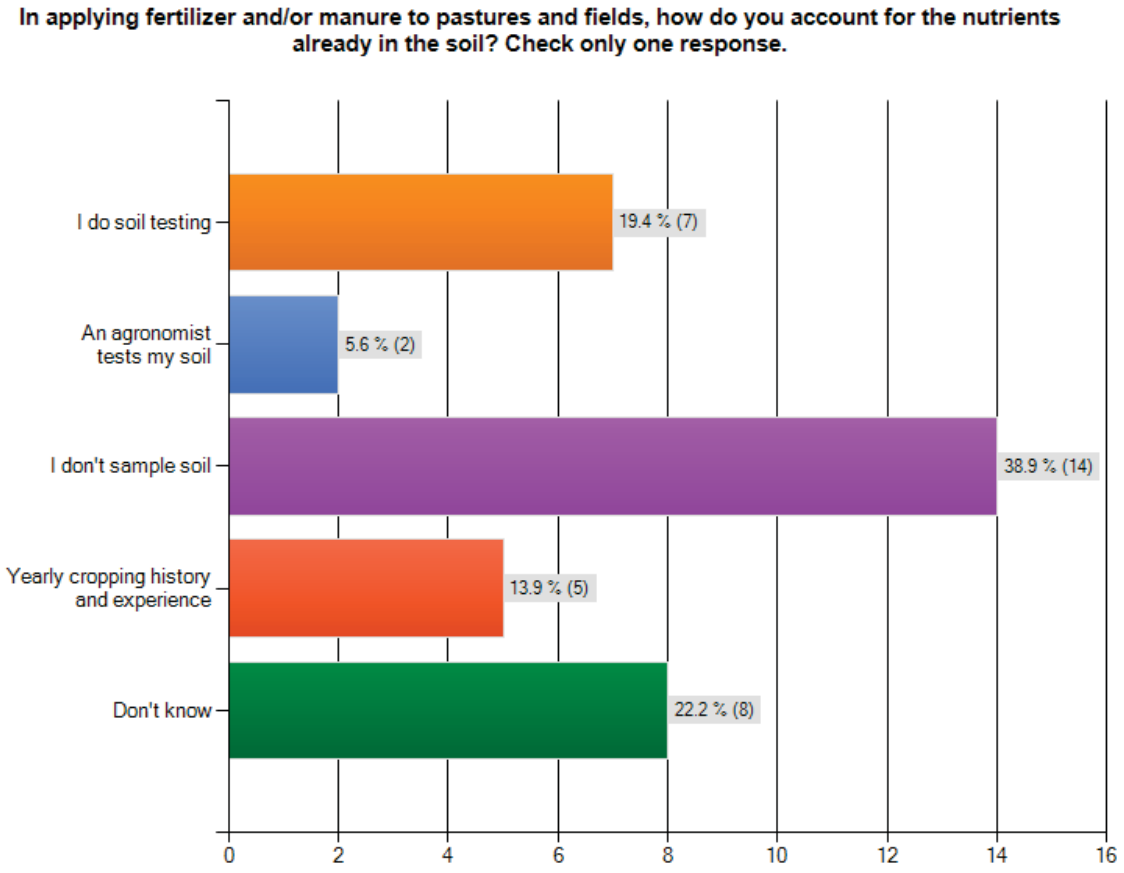

Answered question: 36
Skipped question: 24

Table 14.2 Responses of municipal officials and staff

In applying fertilizer and/or manure to pastures and fields, how do you account for the nutrients already in the soil? Check only one response.

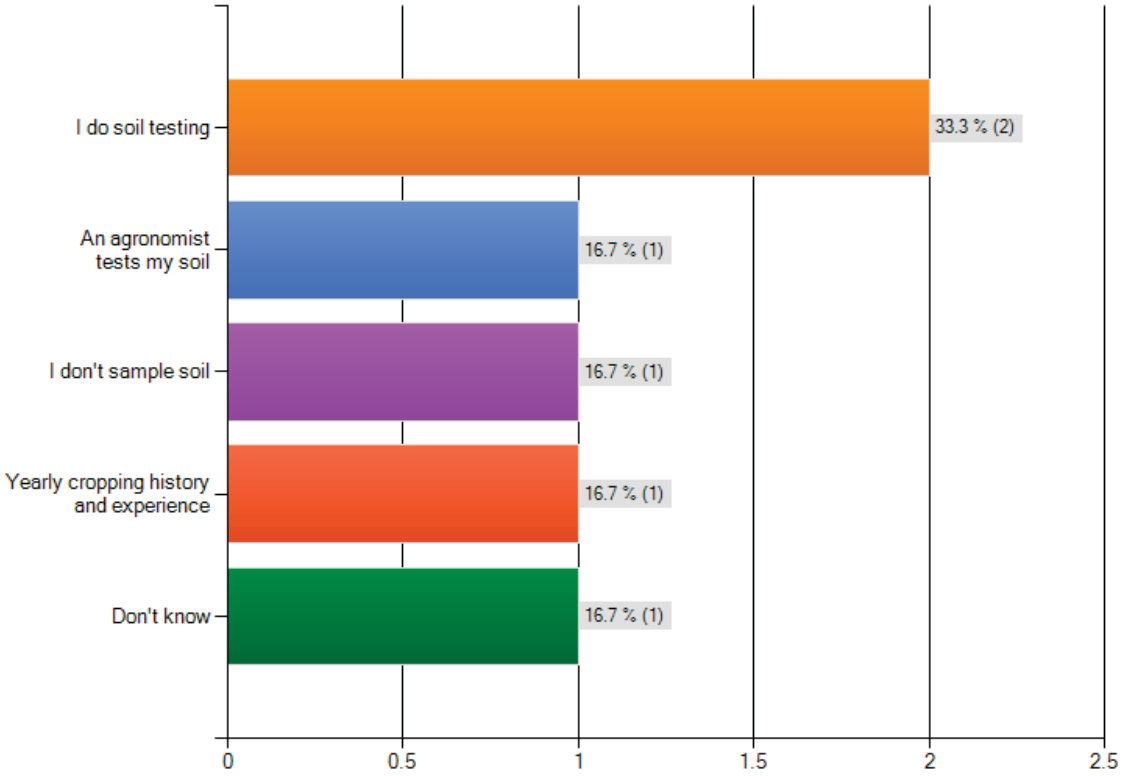

Answered question: 6
Skipped question: 14

Table 14.3 Response by subgroup – Crosstab Q14 x Q8

Elm Creek Water Survey

In applying fertilizer and/or manure to pastures and fields, how do you account for the nutrients already in the soil? Check only one response.

	What type of farming operation do you have? Check all that apply.					
	Dairy or beef	Field crops	Both livestock and crops	Horses (hobby or personal use)	Horses (business such as breeding, boarding or training)	Response Totals
I do soil testing	0.0% (0)	**40.0% (2)**	**50.0% (4)**	4.8% (1)	0.0% (0)	20.0% (7)
An agronomist tests my soil	**33.3% (1)**	0.0% (0)	12.5% (1)	0.0% (0)	0.0% (0)	5.7% (2)
I don't sample soil	**33.3% (1)**	0.0% (0)	0.0% (0)	**52.4% (11)**	33.3% (1)	**37.1% (13)**
Yearly cropping history and experience	**33.3% (1)**	20.0% (1)	25.0% (2)	14.3% (3)	0.0% (0)	14.3% (5)
Don't know	0.0% (0)	**40.0% (2)**	12.5% (1)	28.6% (6)	**66.7% (2)**	22.9% (8)
Other (please specify)	0 replies	1 reply	1 reply	3 replies	0 replies	5
answered question	3	5	8	21	3	**35**
					skipped question	**2**

1 of 1

Take-away: 39% of all respondents do not sample soil, and 22% seem not to know about nutrient accounting. 33% of municipal staff do sample soil, in comparison with only 19% of the overall sample. Of the farming groups, 40% (n = 2) of field crop farmers sample soil, and 50% (n = 4) of those doing both livestock rearing and field cropping sample soil. Only one horse owner samples soil. Results suggest that there is a need and an opportunity to provide information to respondents about soil testing.

Sources of information about fertilizer rates

Question 15 in the practices series examines where respondents seek information on nutrient application. Table 15.1 gives responses for the entire sample. Table 15. 2 shows results for municipal staff and officials. Table 15.3 gives results for agricultural respondents.

Q15: Which of the following sources of information do you use to determine the fertilizer rates you apply? Check all that apply.

Table 15.1 – All responses

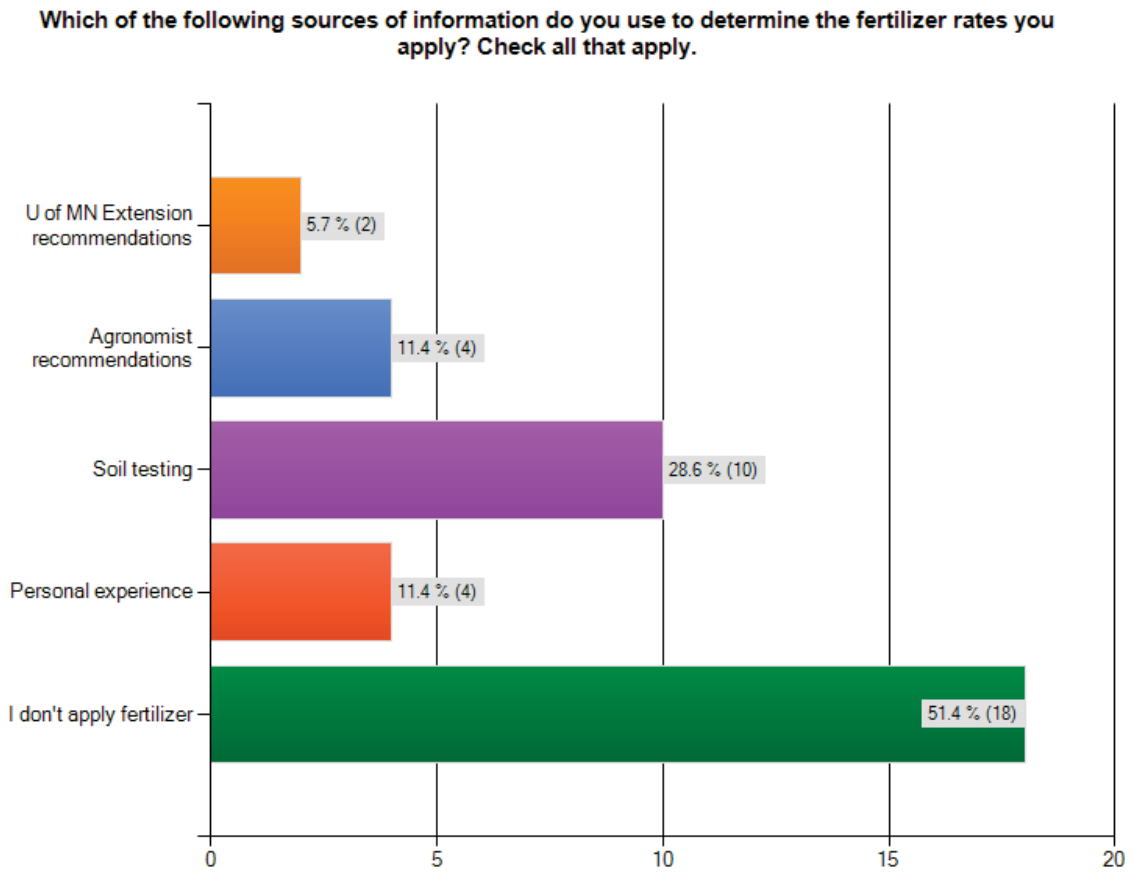

Answered question: 35
Skipped question: 25

Table 15.2 Responses of municipal officials and staff

Which of the following sources of information do you use to determine the fertilizer rates you apply? Check all that apply.

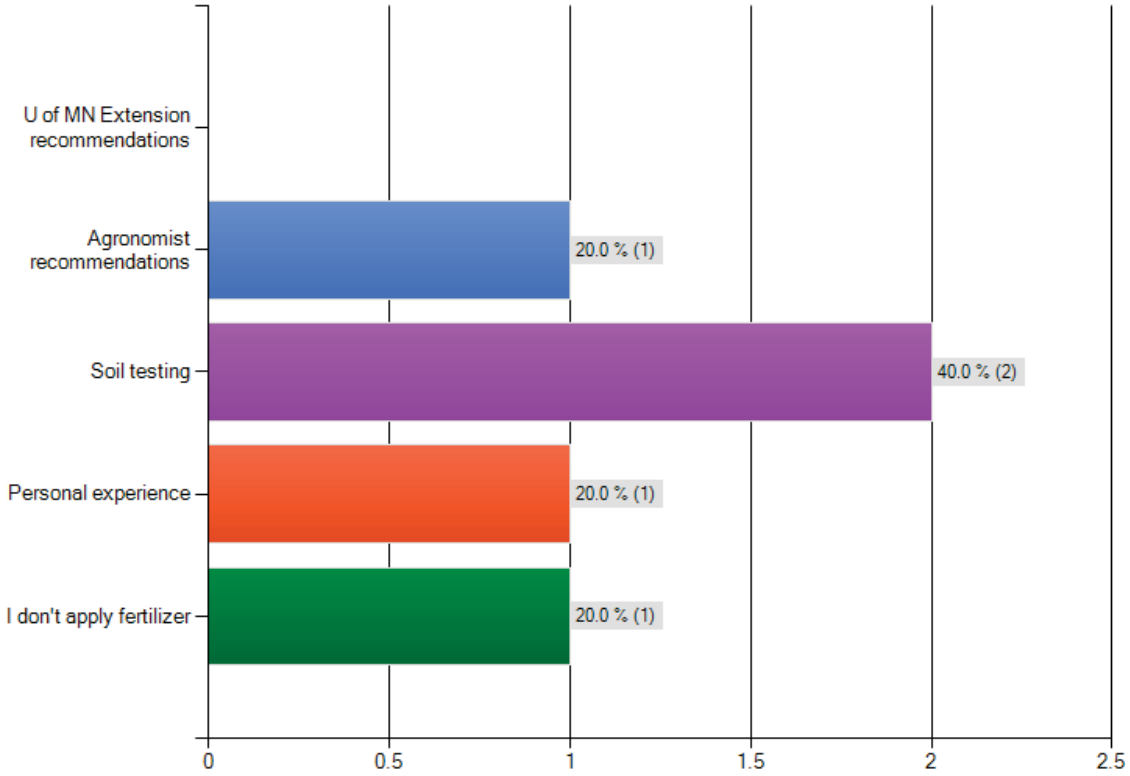

Answered question: 5
Skipped question: 15

Table 15.3 Responses by subgroup – Q 15 x Q8

Elm Creek Water Survey

Which of the following sources of information do you use to determine the fertilizer rates you apply? Check all that apply.

	What type of farming operation do you have? Check all that apply.					
	Dairy or beef	Field crops	Both livestock and crops	Horses (hobby or personal use)	Horses (business such as breeding, boarding or training)	Response Totals
U of MN Extension recommendations	0.0% (0)	0.0% (0)	12.5% (1)	5.3% (1)	0.0% (0)	6.3% (2)
Agronomist recommendations	33.3% (1)	0.0% (0)	37.5% (3)	0.0% (0)	0.0% (0)	12.5% (4)
Soil testing	0.0% (0)	**100.0% (4)**	**62.5% (5)**	15.8% (3)	0.0% (0)	31.3% (10)
Personal experience	**66.7% (2)**	0.0% (0)	0.0% (0)	15.8% (3)	0.0% (0)	12.5% (4)
I don't apply fertilizer	33.3% (1)	0.0% (0)	12.5% (1)	**63.2% (12)**	**100.0% (3)**	**46.9% (15)**
Other (please specify)	0 replies	1 reply	0 replies	3 replies	0 replies	4
answered question	3	4	8	19	3	**32**
					skipped question	**5**

1 of 1

For all respondents, soil testing is the most commonly reported source (29%) of information used to apply fertilizers. Municipal employees use soil testing more often (40%) than the sample as a whole. 100% (n = 4) of field crop farmers report using soil testing, and those raising both crops and livestock (n = 5) rank soil testing at 63%.

Among horse owners, 16% (n = 3) use soil testing and personal experience to determine fertilizer rates, and only one uses U of M UM Extension recommendations. 63% of horse owners do not apply fertilizer.

Take-away: While about half of all respondents don't use fertilizer, the remainder may benefit from information about soil testing and nutrient application. This may be an opportunity for the ECWMC to develop materials on proper nutrient application rates, and how those are determined (or alternatively provide materials already available through U of M UM Extension.

Frequency of soil sampling

Question 16 in the practices series examines where respondents seek information on nutrient application. Table 16.1 gives responses for the entire sample. Table 16. 2 shows results for municipal staff and officials. Table 16.3 gives results for agricultural respondents.

Q16: How often do you sample your soil? Check only one response.

Table 16.1 All responses

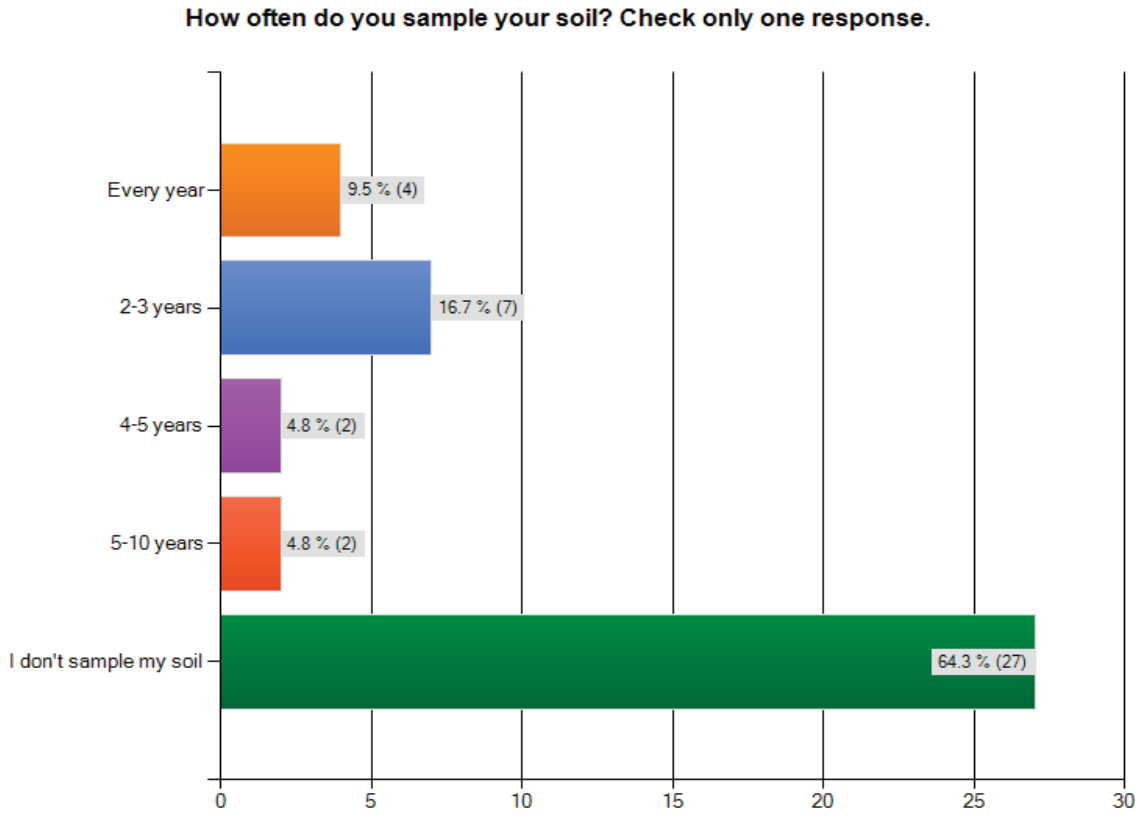

Answered question: 42
Skipped question: 18

Table 16.2 Responses of municipal staff and officials

How often do you sample your soil? Check only one response.

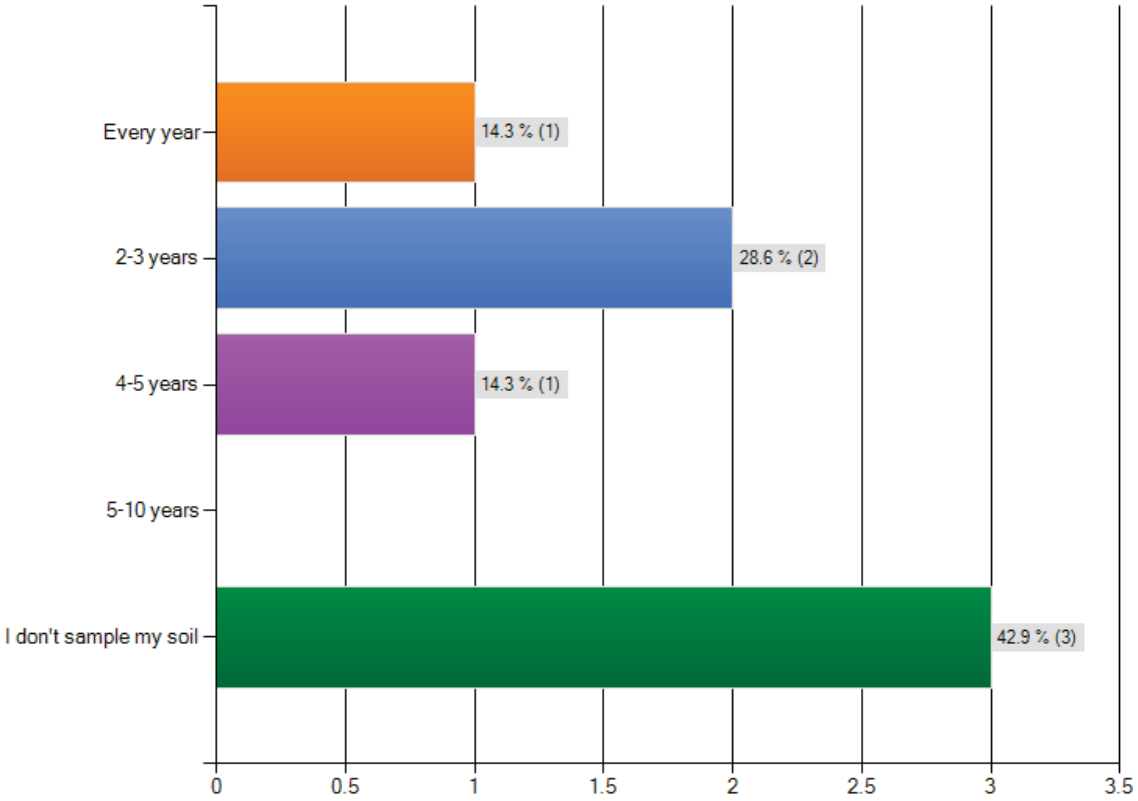

Answered question: 7
Skipped question: 13

Table 16.3 Responses by subgroup – Crosstab Q 16 x Q8

Elm Creek Water Survey

How often do you sample your soil? Check only one response.

	What type of farming operation do you have? Check all that apply.					
	Dairy or beef	Field crops	Both livestock and crops	Horses (hobby or personal use)	Horses (business such as breeding, boarding or training)	Response Totals
Every year	0.0% (0)	20.0% (1)	**37.5% (3)**	4.3% (1)	0.0% (0)	10.8% (4)
2-3 years	**33.3% (1)**	**40.0% (2)**	**37.5% (3)**	4.3% (1)	0.0% (0)	16.2% (6)
4-5 years	0.0% (0)	20.0% (1)	0.0% (0)	4.3% (1)	0.0% (0)	5.4% (2)
5-10 years	**33.3% (1)**	0.0% (0)	12.5% (1)	4.3% (1)	0.0% (0)	5.4% (2)
I don't sample my soil	**33.3% (1)**	20.0% (1)	12.5% (1)	**82.6% (19)**	**100.0% (3)**	**62.2% (23)**
Other (please specify)	0 replies	0 replies	0 replies	0 replies	0 replies	0
answered question	3	5	8	23	3	**37**
					skipped question	**0**

1 of 1

Take-away: Soil sampling is limited and practices are quite variable among the respondents. Most (64%) respondents generally do not sample their soil. Of those that do, 17% report sampling every two to three years. Of municipal staff, 43% do not sample soil, but the highest frequency for those that do is two to three years. Only two livestock farmers reported sampling soil; four field crop farmers sample; and seven livestock/crop producers sample. Only four horse owners reported sampling soil, and each sample at a different frequency. In fact, frequency varies with each respondent in all producer groups.

Manure Management

Question 17 in the practices series explores how respondents manage manure. This question was taken from the Rock County KAP study. Table 17.1 gives responses for the entire sample. Table 17. 2 shows results for municipal staff and officials. Table 17.3 gives results for agricultural respondents.

Q17: How do you currently manage manure? Check all that apply.

Table 17.1 All responses

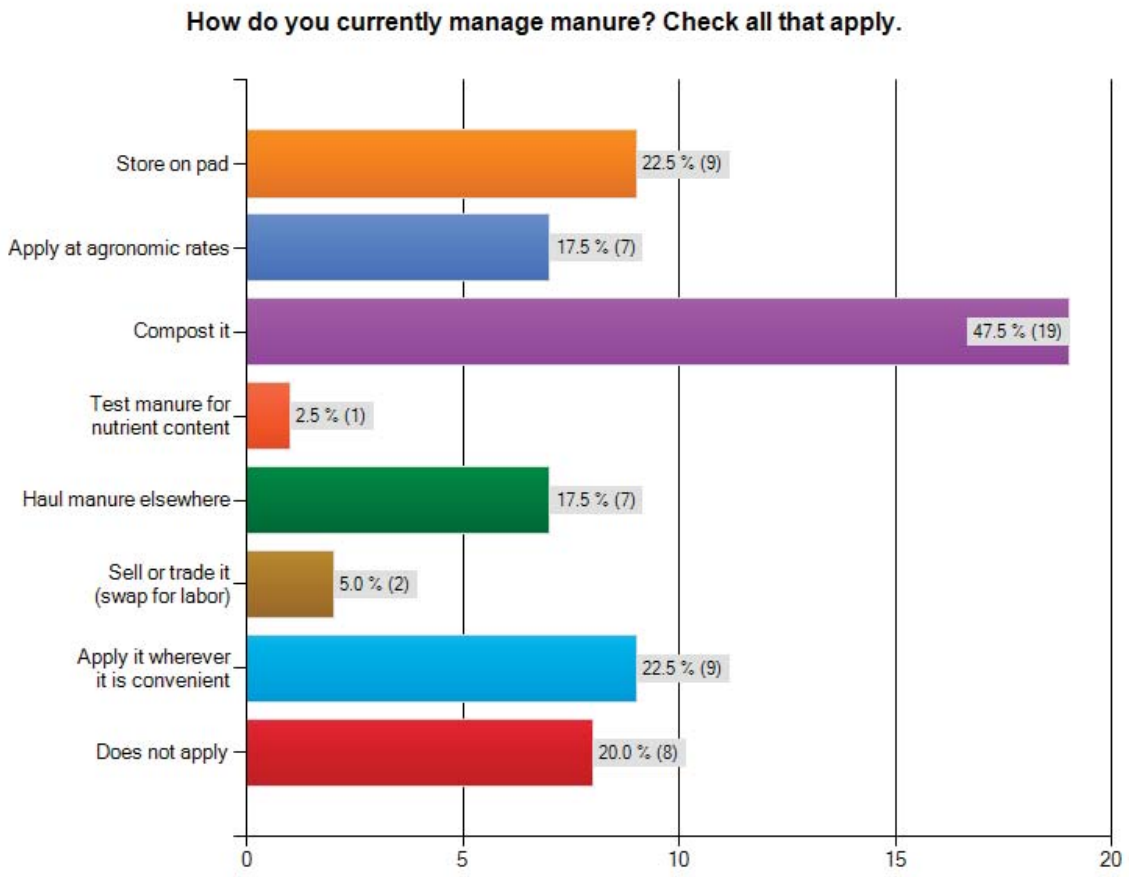

Answered question: 40
Skipped question: 20

Table 17.2 Responses of municipal officials

How do you currently manage manure? Check all that apply.

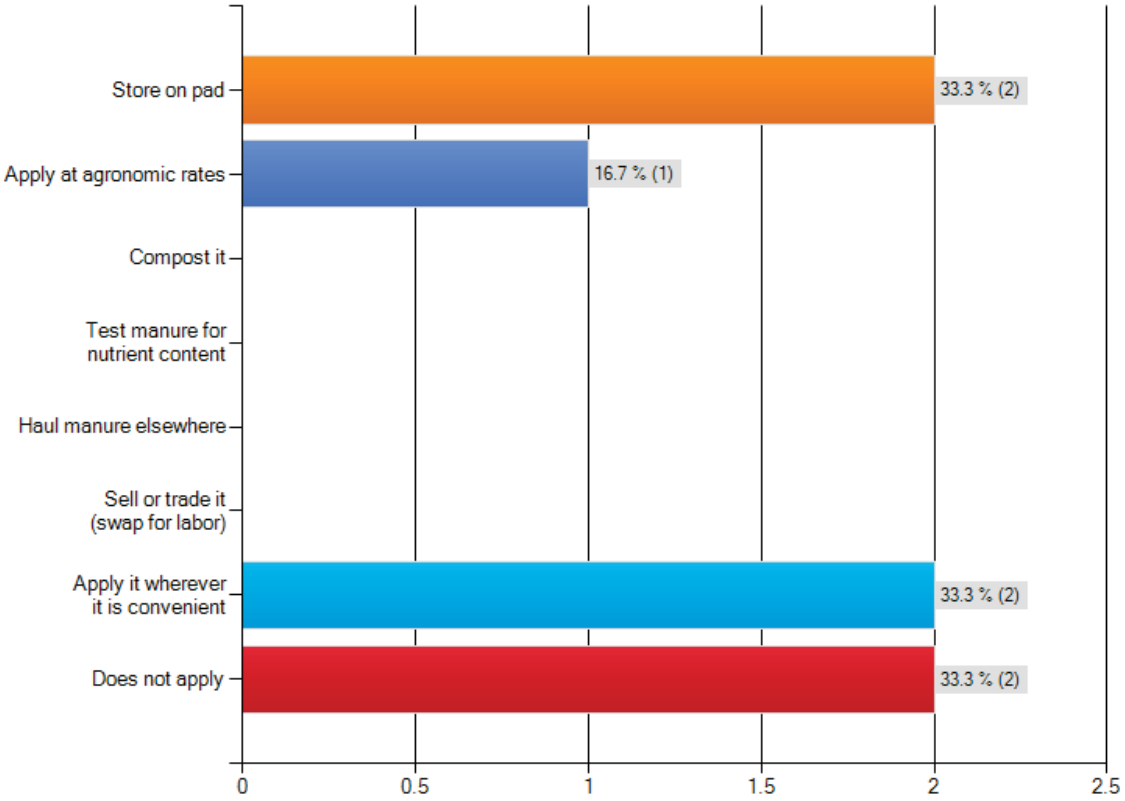

Answered question: 6
Skipped question: 14

Table 17.3 Responses by sub-group – Crosstab Q17 x Q8

Elm Creek Water Survey

How do you currently manage manure? Check all that apply.

	What type of farming operation do you have? Check all that apply.					
	Dairy or beef	Field crops	Both livestock and crops	Horses (hobby or personal use)	Horses (business such as breeding, boarding or training)	Response Totals
Store on pad	0.0% (0)	20.0% (1)	**50.0% (4)**	23.8% (5)	0.0% (0)	25.7% (9)
Apply at agronomic rates	33.3% (1)	20.0% (1)	25.0% (2)	14.3% (3)	0.0% (0)	17.1% (6)
Compost it	**66.7% (2)**	40.0% (2)	37.5% (3)	**52.4% (11)**	**66.7% (2)**	**48.6% (17)**
Test manure for nutrient content	0.0% (0)	0.0% (0)	12.5% (1)	0.0% (0)	0.0% (0)	2.9% (1)
Haul manure elsewhere	0.0% (0)	0.0% (0)	0.0% (0)	23.8% (5)	**66.7% (2)**	20.0% (7)
Sell or trade it (swap for labor)	0.0% (0)	0.0% (0)	0.0% (0)	0.0% (0)	33.3% (1)	2.9% (1)
Apply it wherever it is convenient	0.0% (0)	0.0% (0)	37.5% (3)	19.0% (4)	33.3% (1)	22.9% (8)
Does not apply	0.0% (0)	**60.0% (3)**	12.5% (1)	9.5% (2)	33.3% (1)	14.3% (5)
Other (please specify)	0 replies	0 replies	1 reply	3 replies	0 replies	4
answered question	3	5	8	21	3	**35**
					skipped question	**2**

1 of 1

About half of all respondents (48%) reported composting manure, and 23% reported storing manure on a pad or spreading it wherever it is convenient. Among the small sample of municipal staff that answered this question, two reported storing it on a pad or spreading wherever convenient. Two livestock operators reported composting manure and one reported application at agronomic rates. Field crop producers reported storing on a pad (n = 1), applying at agronomic rates (n = 1) and composting (n = 2). For those raising both livestock and field crops, again the pattern is mixed with four reporting storage on a pad, two applying at agronomic rates, three composting, and one testing for nutrient content. The majority of horse owners and horse businesses reported composting as their most common practice. Two horse business operators indicated that they haul manure elsewhere.

Take-away: The wording on this question may be interpreted differently. Several comments suggested that "composting" means "let it decompose wherever it falls," rather than actively using a composting method. Although there are a wide variety of practices in all sample groups, few respondents seem to actively manage manure.

Method of manure application

Question 18 in the practices series explores how respondents manage manure. As with others in the series, this question was taken from the Rock County KAP study. Table 18.1 gives responses for the entire sample. Table 18.2 shows results for municipal staff and officials. Table 18.3 gives results for agricultural respondents.

Q18: What method of manure application do you most frequently use? Check only one response.

Table 18.1 All responses

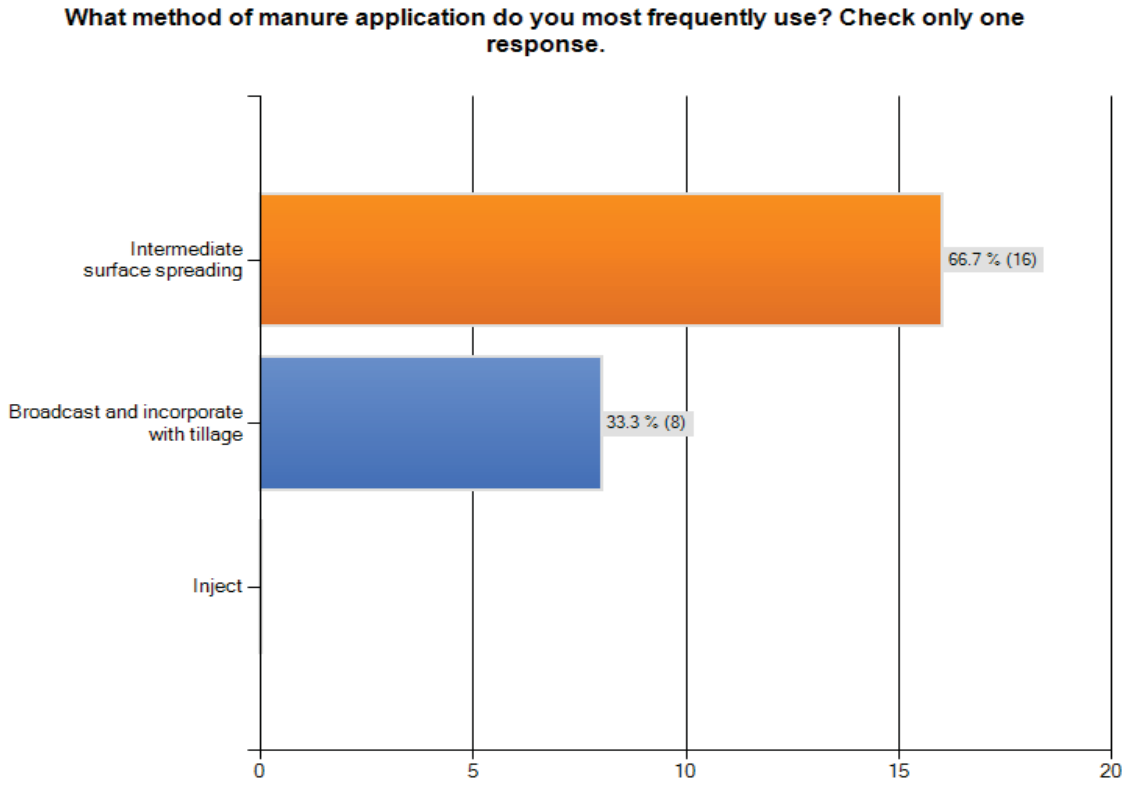

Answered question: 24
Skipped question: 36

Table 18.2 Responses of municipal officials

What method of manure application do you most frequently use? Check only one response.

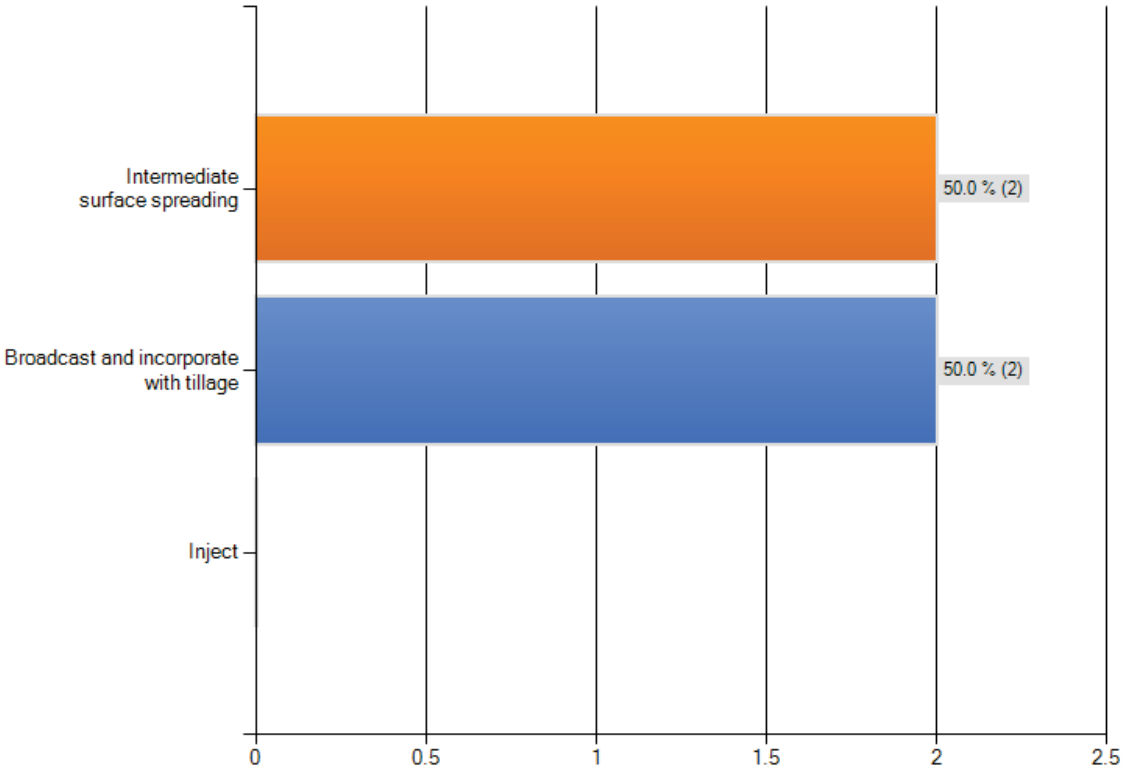

Answered question:16
Skipped question: 4

Table 18.3 Responses by subgroup – Crosstab Q 18 x Q8

Elm Creek Water Survey

What method of manure application do you most frequently use? Check only one response.

	What type of farming operation do you have? Check all that apply.					
	Dairy or beef	Field crops	Both livestock and crops	Horses (hobby or personal use)	Horses (business such as breeding, boarding or training)	Response Totals
Intermediate surface spreading	100.0% (3)	50.0% (1)	28.6% (2)	91.7% (11)	50.0% (1)	69.6% (16)
Broadcast and incorporate with tillage	0.0% (0)	50.0% (1)	71.4% (5)	8.3% (1)	50.0% (1)	30.4% (7)
Inject	0.0% (0)	0.0% (0)	0.0% (0)	0.0% (0)	0.0% (0)	0.0% (0)
Other (please specify)	0 replies	1 reply	0 replies	8 replies	0 replies	9
answered question	3	2	7	12	2	23
					skipped question	14

1 of 1

Among all respondents, 67% reported doing intermediate surface spreading and 33% reported broadcasting with surface spreading. None reported injection. Among municipal staff, half reported intermediate surface spreading and half reported broadcasting. Among the agricultural subgroups, all dairy/beef producers reported intermediate surface spreading and no other method. Field crop producers reported intermediate surface spreading and broadcasting. Farmers raising both livestock and field crops reported intermediate surface spreading (n = 2) and broadcasting (n = 5). 92% of horse owners reported intermediate surface spreading, and only one reported broadcasting.

Takeaway: As with previous questions, there is a wide range of methods of manure application with no clear pattern except for intermediate surface spreading reported by horse owners.

Manure storage

Question 19 in the practices series explores how respondents manage manure. This question was taken from the Rock County KAP study. Table 19.1 gives responses for the entire sample. Table 19.2 shows results for municipal staff and officials. Table 19.3 gives results for agricultural respondents.

Q19: How do you store manure? Check all that apply.

Table 19.1 All responses

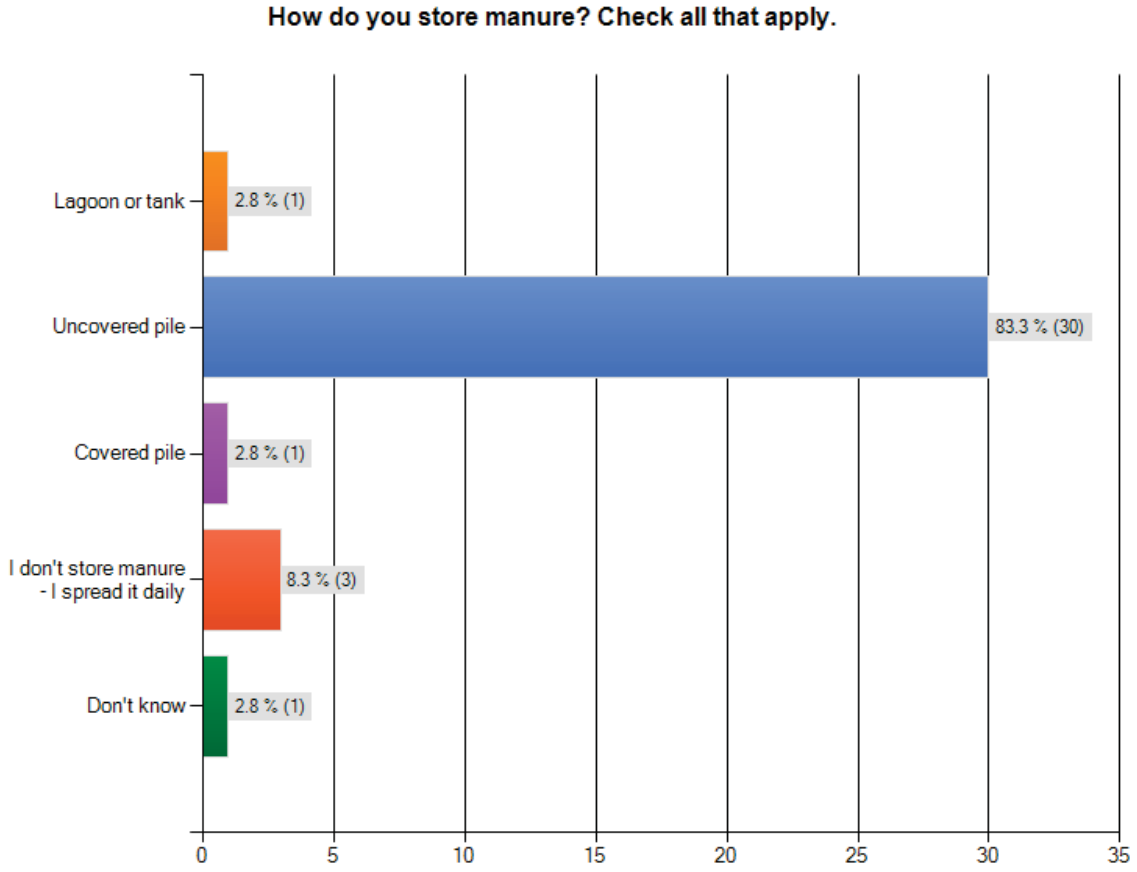

Answered question: 36
Skipped question: 24

Table 19.2 Responses of municipal staff

How do you store manure? Check all that apply.

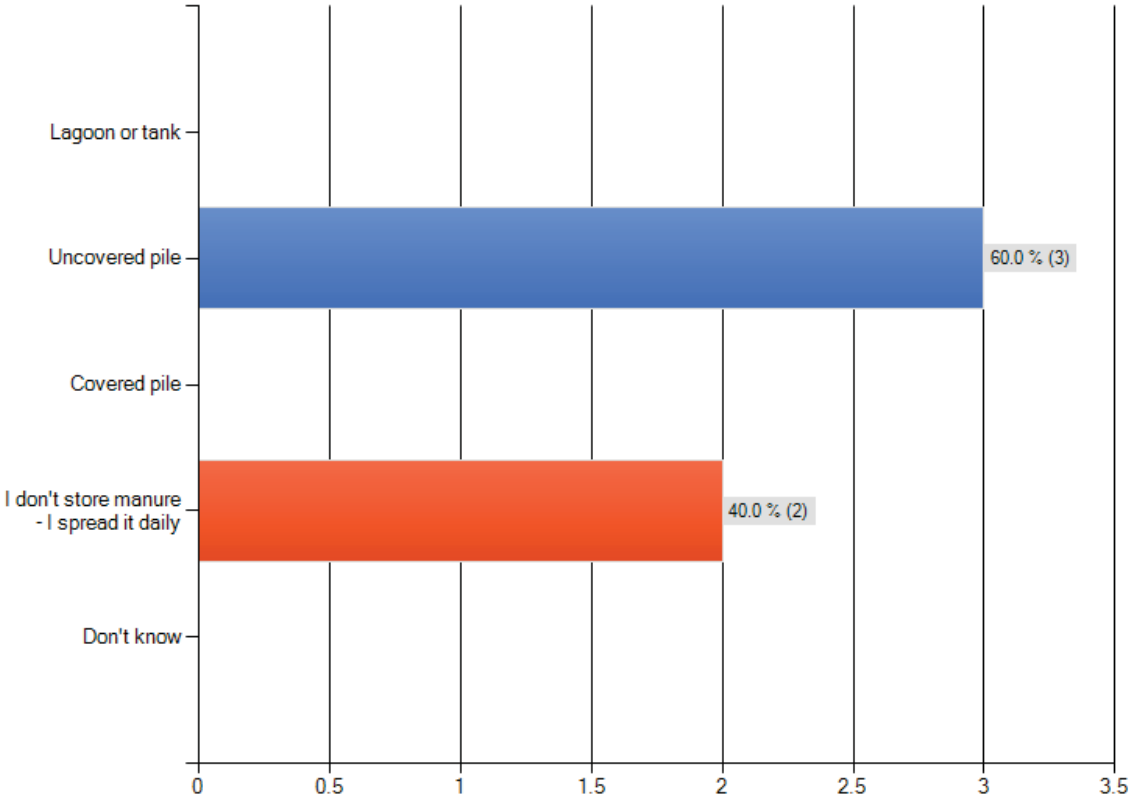

Answered question: 5
Skipped question: 15

Table 19.3 Responses by subgroup – Q 19 x Q 8

Elm Creek Water Survey

How do you store manure? Check all that apply.

	What type of farming operation do you have? Check all that apply.					
	Dairy or beef	Field crops	Both livestock and crops	Horses (hobby or personal use)	Horses (business such as breeding, boarding or training)	Response Totals
Lagoon or tank	0.0% (0)	0.0% (0)	12.5% (1)	0.0% (0)	0.0% (0)	2.9% (1)
Uncovered pile	**66.7% (2)**	**66.7% (2)**	**75.0% (6)**	**86.4% (19)**	**66.7% (2)**	**82.4% (28)**
Covered pile	0.0% (0)	0.0% (0)	0.0% (0)	4.5% (1)	0.0% (0)	2.9% (1)
I don't store manure - I spread it daily	33.3% (1)	0.0% (0)	12.5% (1)	9.1% (2)	33.3% (1)	8.8% (3)
Don't know	0.0% (0)	33.3% (1)	0.0% (0)	0.0% (0)	0.0% (0)	2.9% (1)
Other (please specify)	1 reply	1 reply	0 replies	2 replies	0 replies	4
answered question	3	3	8	22	3	**34**
					skipped question	**3**

1 of 1

Take-away: The clear majority in all sample groups stores manure in an uncovered pile. Those using other practices (covered pile, daily spreading, and lagoon) are limited to just a few individuals. There is scope for providing educational information and technical content on other forms of manure storage.

Manure management planning

Question 20 in the practices series explores manure management planning. This question was also taken from the Rock County KAP study. Table 20.1 below gives responses for the entire sample. Table 20.2 shows results for municipal staff and officials. Table 20.3 gives results for agricultural respondents.

Q20: Do you have a written manure management plan? Check only one response.

Table 20.1 All responses

Do you have a written manure management plan? Check only one response.

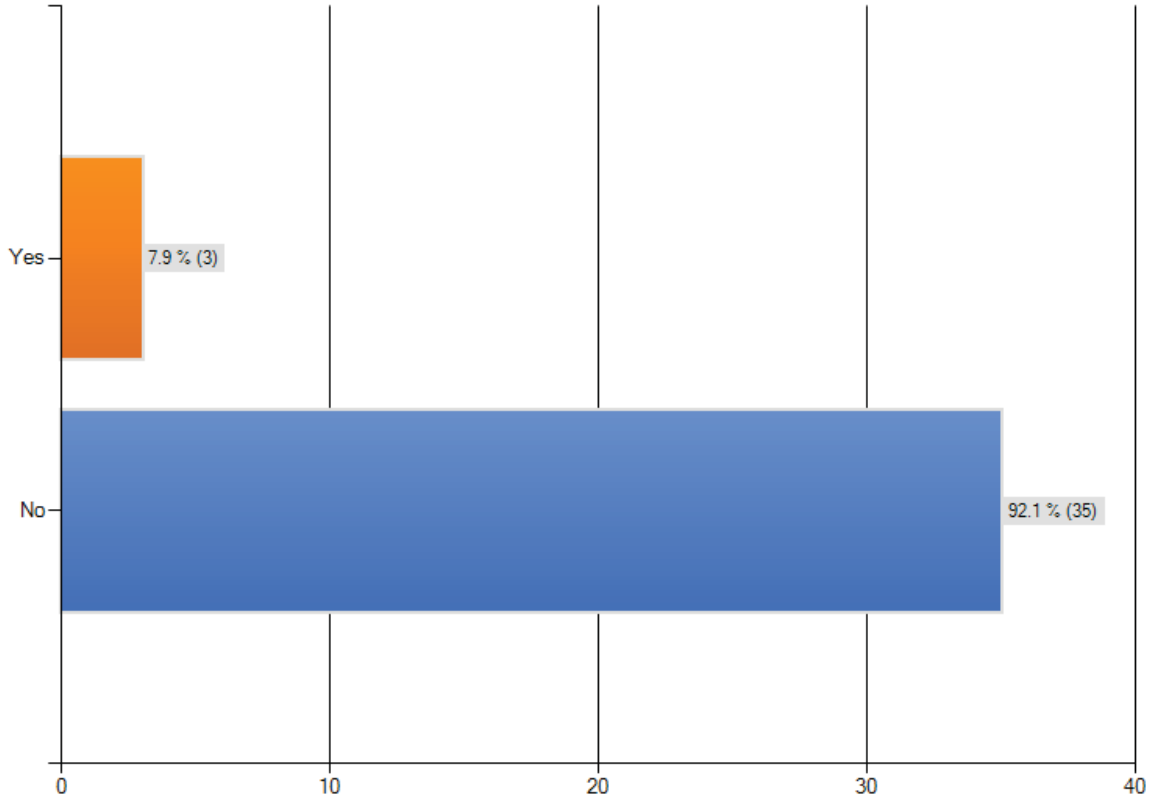

Answered question: 38
Skipped question: 22

Table 20.2 Responses of municipal staff

Do you have a written manure management plan? Check only one response.

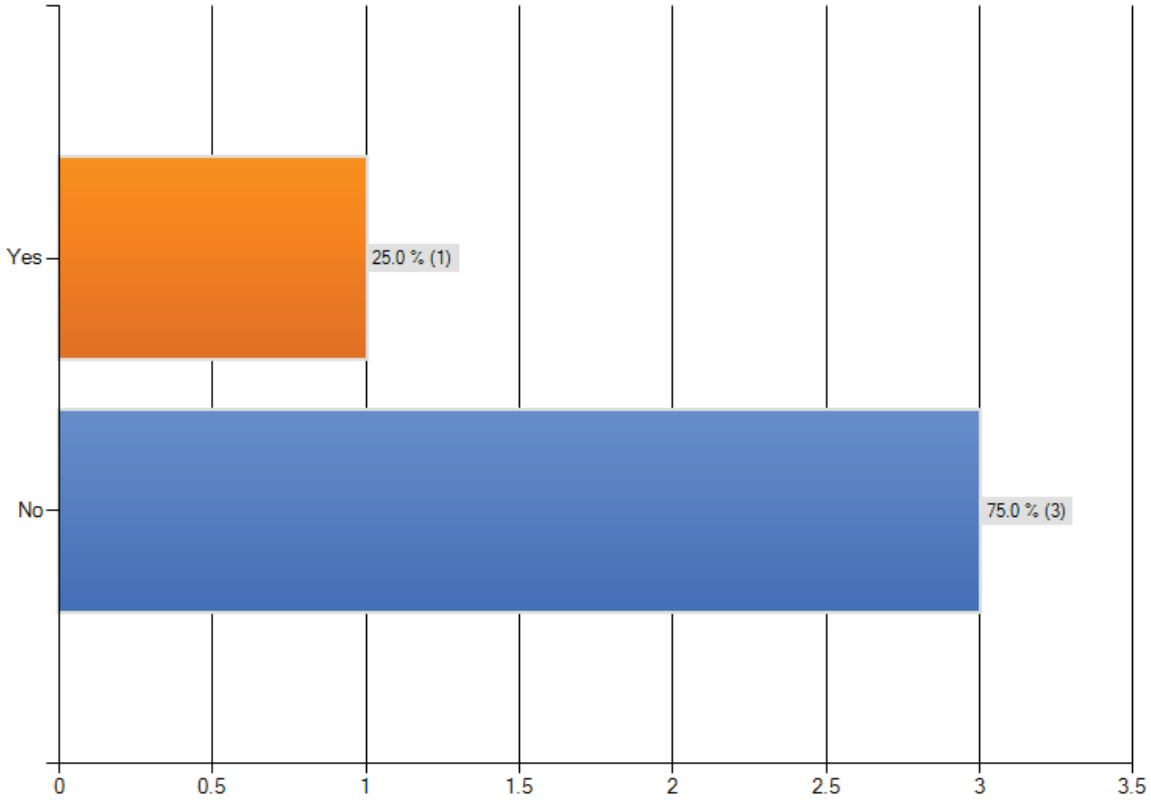

Answered question: 5
Skipped question: 15

Table 20.3 Responses by subgroup Q 20 x Q 8

Elm Creek Water Survey

Do you have a written manure management plan? Check only one response.

	What type of farming operation do you have? Check all that apply.					
	Dairy or beef	Field crops	Both livestock and crops	Horses (hobby or personal use)	Horses (business such as breeding, boarding or training)	Response Totals
Yes	0.0% (0)	0.0% (0)	25.0% (2)	4.3% (1)	33.3% (1)	5.7% (2)
No	100.0% (2)	100.0% (4)	75.0% (6)	95.7% (22)	66.7% (2)	94.3% (33)
Other (please specify)	0 replies	0 replies	0 replies	0 replies	0 replies	0
answered question	2	4	8	23	3	35
					skipped question	2

1 of 1

For the entire sample, only three individuals have a manure management plan. This includes one municipal staff member. For the agricultural producer samples, one additional respondent indicated that s/he has a written manure management plan, for a total of four individuals. Of these, one has both crops and livestock; one is a horse owner; and the fourth has a horse-related business. Of note, none of the dairy/beef operators indicated that they have a written plan.
Take-away: There is ample scope to engage horse owners and agricultural producers in manure management planning. Q24 (below) explores options that may appeal to producers to take the next step.

Value of manure

Question 21 in the practices series explores how respondents value manure. This question was also taken from the Rock County KAP study. Table 21.1 below gives responses for the entire sample. Table 21.2 shows results for municipal staff and officials. Table 21.3 gives results for agricultural respondents.

Q21: How do you view the value of manure? Check one response for each row.

Table 21.1 All responses

How do view the value of manure? Check one response for each row.

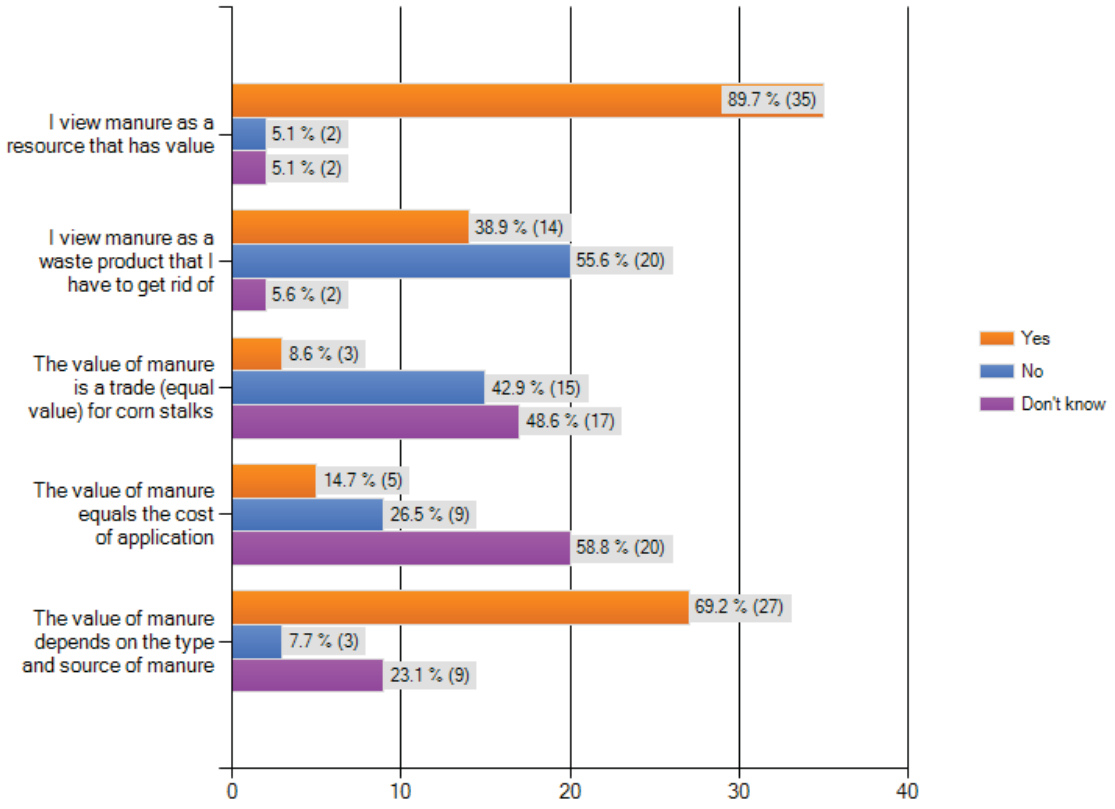

Answered question: 43
Skipped question: 17

Table 21.2 Responses of municipal staff

How do view the value of manure? Check one response for each row.

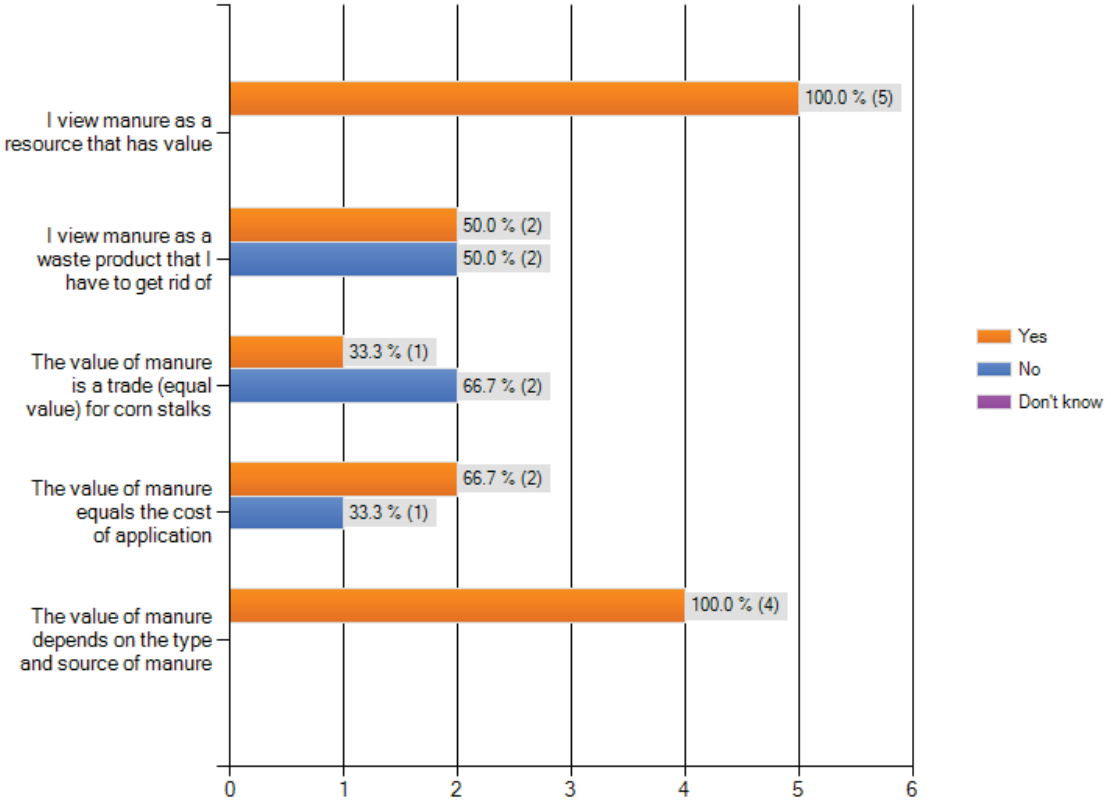

Answered question: 6
Skipped question: 14

Table 21.3 Responses by subgroup – agricultural producers

21. How do view the value of manure? Check one response for each row.

What type of farming operation do you have? Check all that apply.

		Dairy or beef	Field crops	Both livestock and crops	Horses (hobby or personal use)	Horses (business such as breeding, boarding or training)	Response Totals
I view manure as a resource that has value	**Yes**	100.0% (2)	75.0% (3)	100.0% (7)	85.0% (17)	100.0% (3)	
	No	0.0% (0)	0.0% (0)	0.0% (0)	10.0% (2)	0.0% (0)	
	Don't know	0.0% (0)	25.0% (1)	0.0% (0)	5.0% (1)	0.0% (0)	
		2	4	7	20	3	32
I view manure as a waste product that I have to get rid of	**Yes**	66.7% (2)	33.3% (1)	16.7% (1)	45.0% (9)	100.0% (2)	
	No	33.3% (1)	33.3% (1)	83.3% (5)	50.0% (10)	0.0% (0)	
	Don't know	0.0% (0)	33.3% (1)	0.0% (0)	5.0% (1)	0.0% (0)	
		3	3	6	20	2	31
The value of manure is a trade (equal value) for corn stalks	**Yes**	33.3% (1)	33.3% (1)	16.7% (1)	0.0% (0)	0.0% (0)	
	No	66.7% (2)	0.0% (0)	83.3% (5)	36.8% (7)	50.0% (1)	
	Don't know	0.0% (0)	66.7% (2)	0.0% (0)	63.2% (12)	50.0% (1)	
		3	3	6	19	2	30
The value of manure equals the cost of application	**Yes**	100.0% (2)	0.0% (0)	16.7% (1)	11.1% (2)	0.0% (0)	
	No	0.0% (0)	0.0% (0)	83.3% (5)	16.7% (3)	0.0% (0)	
	Don't know	0.0% (0)	100.0% (3)	0.0% (0)	72.2% (13)	100.0% (2)	
		2	3	6	18	2	29
The value of manure depends on the type and source of manure	**Yes**	100.0% (2)	100.0% (4)	87.5% (7)	55.0% (11)	100.0% (3)	
	No	0.0% (0)	0.0% (0)	12.5% (1)	10.0% (2)	0.0% (0)	
	Don't know	0.0% (0)	0.0% (0)	0.0% (0)	35.0% (7)	0.0% (0)	
		2	4	8	20	3	33

Take-away: While many respondents understand that manure has value, they simultaneously view it as a waste product that they need to get rid of. The majority of respondents are aware that the nutrient properties of manure depend on the type and source. Overall, the municipal staff respondents expressed virtually no uncertainty about the variables in this question, while the overall sample and some farmers were unsure about some variables (value of manure is a trade; value equals cost of application). In particular, the field crop producers had the highest “Don’t know” responses. There may be an opportunity for some targeted educational messages on the value of manure.

Impact of manure on local streams and lakes

Question 22 was a knowledge question about the impact of manure on local water bodies. Table 22.1 below gives responses for the entire sample. Table 22.2 shows results for municipal staff and officials. Table 23.3 gives results for agricultural respondents.

Q22: Does manure have any effect on the condition of local streams and lakes? Check only one response.

Table 22.1 All responses

Does manure have any effect on the condition of local streams and lakes? Check only one response.

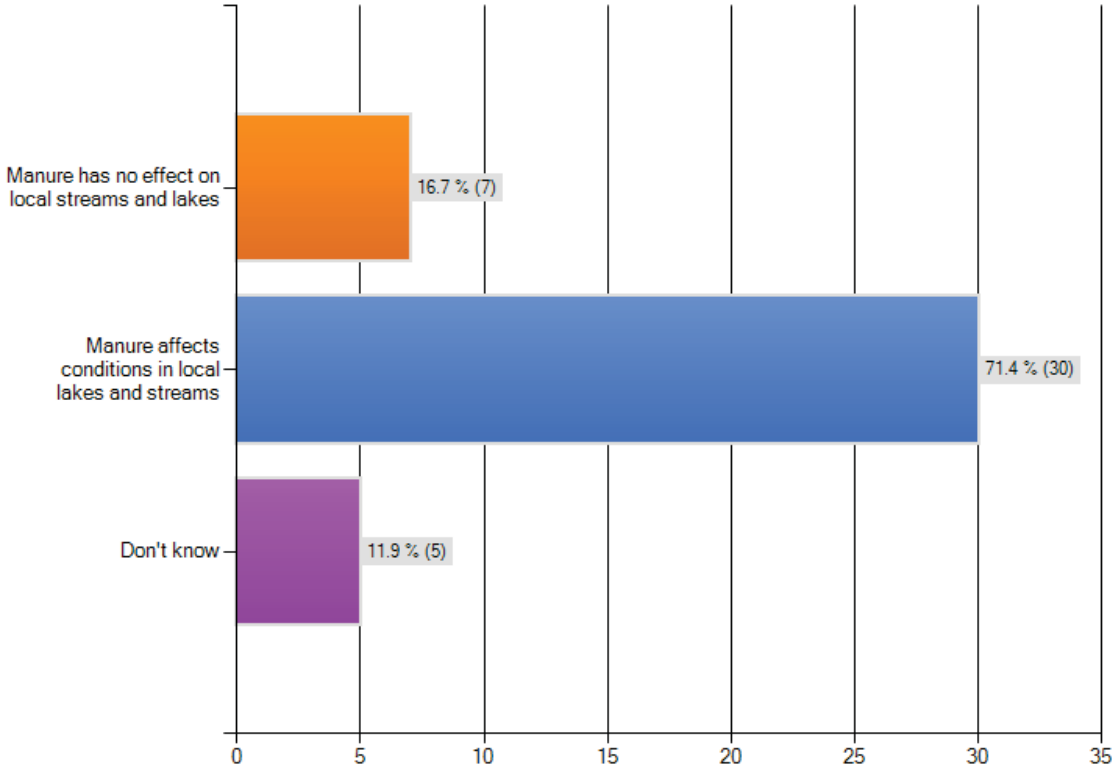

Answered question: 42
Skipped question: 18

Table 22.2 Responses of municipal staff

Does manure have any effect on the condition of local streams and lakes? Check only one response.

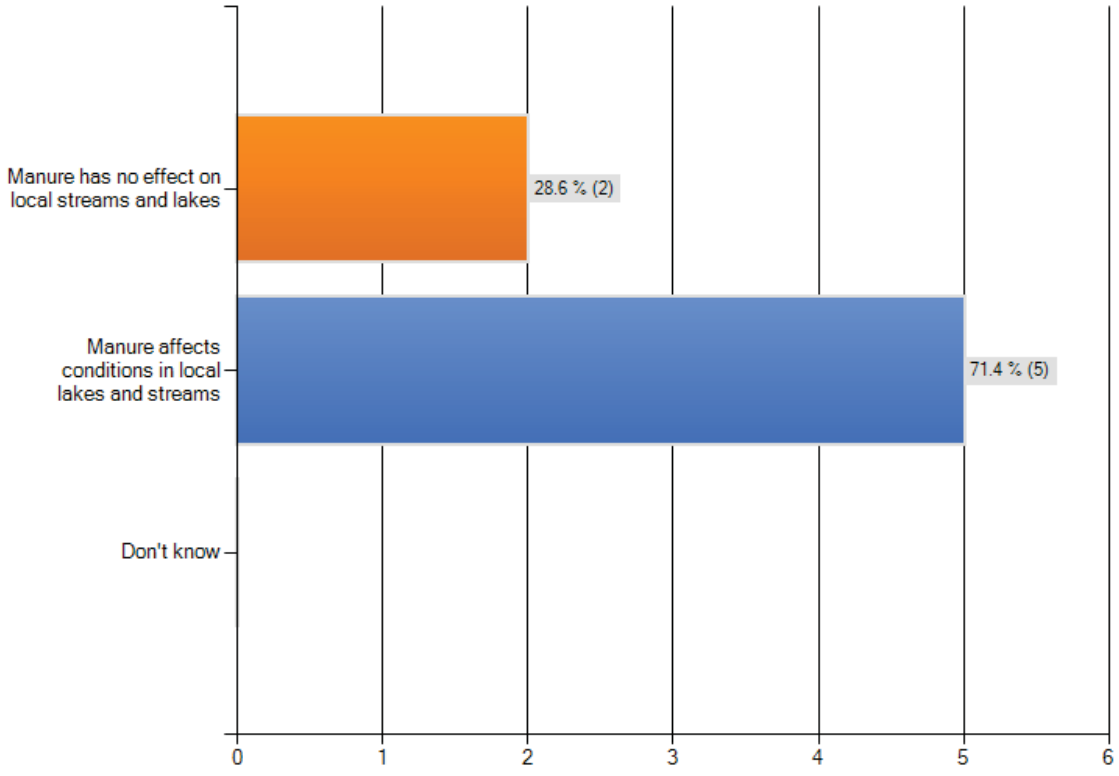

Answered question: 7
Skipped question: 13

Table 22.3 Responses by agricultural subgroup – Crosstab Q22 x Q8

Elm Creek Water Survey

Does manure have any effect on the condition of local streams and lakes? Check only one response.

	What type of farming operation do you have? Check all that apply.					
	Dairy or beef	Field crops	Both livestock and crops	Horses (hobby or personal use)	Horses (business such as breeding, boarding or training)	Response Totals
Manure has no effect on local streams and lakes	**66.7% (2)**	0.0% (0)	37.5% (3)	9.5% (2)	0.0% (0)	20.0% (7)
Manure affects conditions in local lakes and streams	33.3% (1)	**80.0% (4)**	**50.0% (4)**	**85.7% (18)**	33.3% (1)	**65.7% (23)**
Don't know	0.0% (0)	20.0% (1)	12.5% (1)	4.8% (1)	**66.7% (2)**	14.3% (5)
Other (please specify)	1 reply	0 replies	1 reply	2 replies	0 replies	4
answered question	3	5	8	21	3	**35**
					skipped question	**2**

1 of 1

Responses to this question are very consistent. Around 71% of the entire sample, as well as municipal staff, understand that manure has an impact on local water bodies. For agricultural groups, the majority of field crop producers, crop and livestock producers, and horse owners understand this construct. However, two dairy/beef operators feel that manure has no effect on water bodies. Overall, seven respondents feel that manure has no impact on local streams. There is some uncertainty expressed by five individuals in the ag audience.

Take-away: While most people understand that there is a connection between human activities and water quality (Q5 above), there is less certainty about the impact of manure on water bodies. This should be a starting point upon which to build specific educational content and technical information, especially for agricultural producers.

Sensitive areas for manure application

Question 23 in the practices series explores how respondents manage manure. This question was also taken from the Rock County KAP study. Table 23.1 below gives responses for the entire sample. Table 23.2 shows results for municipal staff and officials. Table 23.3 gives results for agricultural respondents.

Q23: Which of the following are considered sensitive areas for manure application? Check all that apply.

Table 23.1 All responses

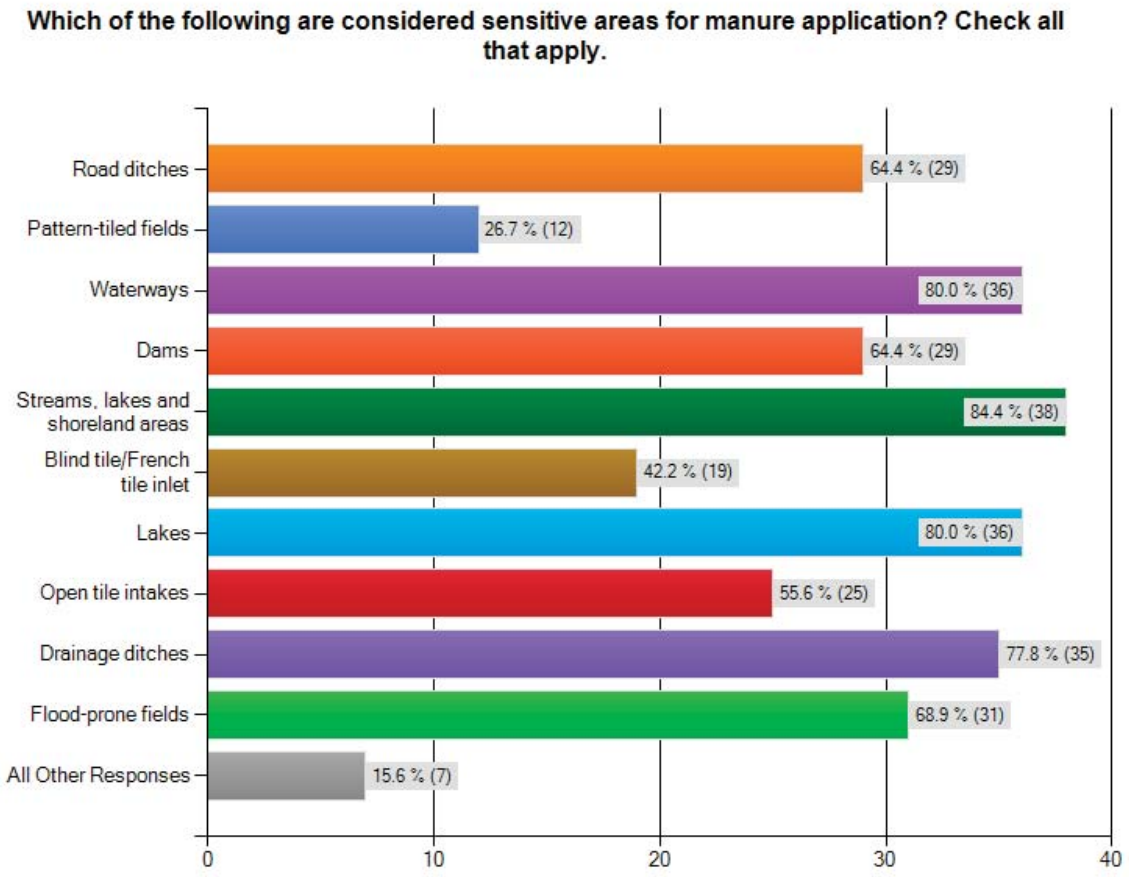

Answered question: 45
Skipped question: 15

Table 23.2 Responses of municipal staff

Which of the following are considered sensitive areas for manure application? Check all that apply.

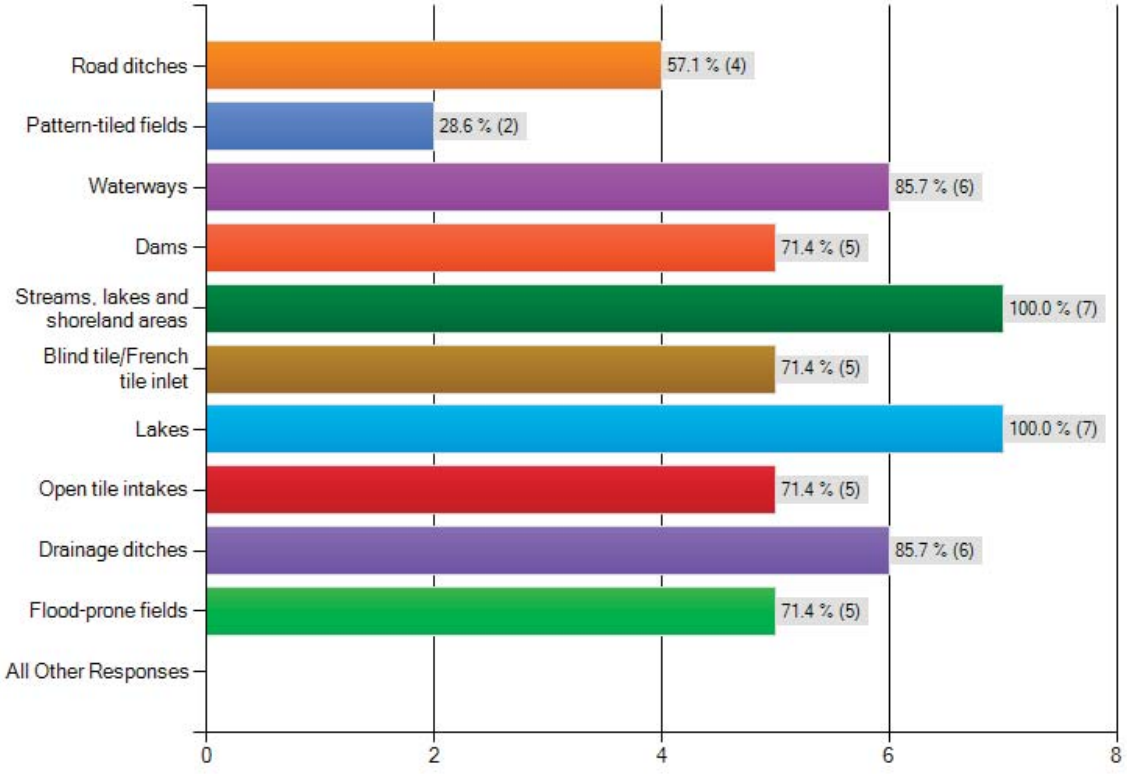

Answered question: 7
Skipped question: 13

Table 23.3 Responses of agricultural subgroups – Crosstab Q23 x Q 8

Elm Creek Water Survey

Which of the following are considered sensitive areas for manure application? Check all that apply.

	What type of farming operation do you have? Check all that apply.					
	Dairy or beef	Field crops	Both livestock and crops	Horses (hobby or personal use)	Horses (business such as breeding, boarding or training)	Response Totals
Road ditches	66.7% (2)	80.0% (4)	87.5% (7)	52.2% (12)	33.3% (1)	56.8% (21)
Pattern-tiled fields	33.3% (1)	40.0% (2)	12.5% (1)	17.4% (4)	0.0% (0)	18.9% (7)
Waterways	**100.0% (3)**	80.0% (4)	87.5% (7)	**78.3% (18)**	33.3% (1)	75.7% (28)
Dams	**100.0% (3)**	80.0% (4)	75.0% (6)	65.2% (15)	33.3% (1)	64.9% (24)
Streams, lakes and shoreland areas	**100.0% (3)**	**100.0% (5)**	**100.0% (8)**	**78.3% (18)**	33.3% (1)	**81.1% (30)**
Blind tile/French tile inlet	**100.0% (3)**	40.0% (2)	50.0% (4)	30.4% (7)	33.3% (1)	35.1% (13)
Lakes	**100.0% (3)**	**100.0% (5)**	87.5% (7)	73.9% (17)	33.3% (1)	75.7% (28)
Open tile intakes	**100.0% (3)**	40.0% (2)	75.0% (6)	56.5% (13)	33.3% (1)	56.8% (21)
Drainage ditches	**100.0% (3)**	**100.0% (5)**	87.5% (7)	73.9% (17)	33.3% (1)	75.7% (28)
Flood-prone fields	**100.0% (3)**	**100.0% (5)**	62.5% (5)	60.9% (14)	0.0% (0)	64.9% (24)

1 of 2

Don't know	0.0% (0)	0.0% (0)	0.0% (0)	21.7% (5)	**66.7% (2)**	18.9% (7)
Other (please specify)	0 replies	0 replies	0 replies	1 reply	0 replies	1
answered question	3	5	8	23	3	**37**
					skipped question	**0**

Two of the sample groups, agricultural producers and municipal staff, were highly aware that lakes, streams, waterways and other water bodies are sensitive areas for manure application. The sample overall was somewhat less aware. The results do not show any particular area where there is a need for heightened awareness.

Take-away: Awareness is quite high in the overall sample about what constitutes a sensitive area for manure management.

Options for manure management planning

This attitudes question was intended to find out what might encourage respondents to attempt manure management planning. Table 24.1 summarizes all responses; Table 24.2 shows responses for municipal staff and officials; and Table 24.3 summarizes the agricultural producers.

Table 24.1 All responses

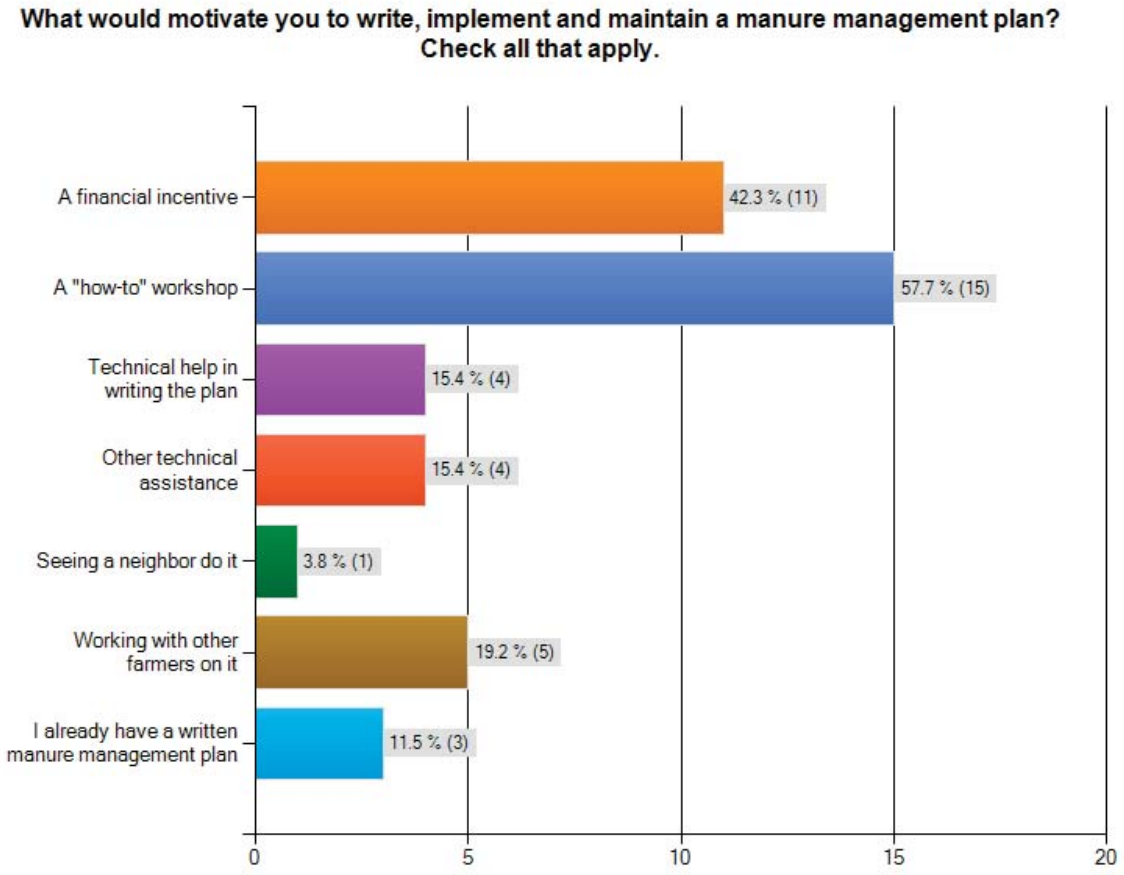

Answered question: 26
Skipped question: 34

Several respondents did not check an option on the questionnaire, but did provide the following comments:

- I am relying on my end user for final management.
- Nothing - government should leave me alone.
- I have my manure hauled away.
- I just own a little bit of land with a couple of horses. I have no manure management plans.
- NO horses anymore so not applicable
- We currently do not have large animals
- We compost and till in compost.
- We only have a few horses here so it doesn't seem to be an issue.

Table 24.2 Responses of municipal officials

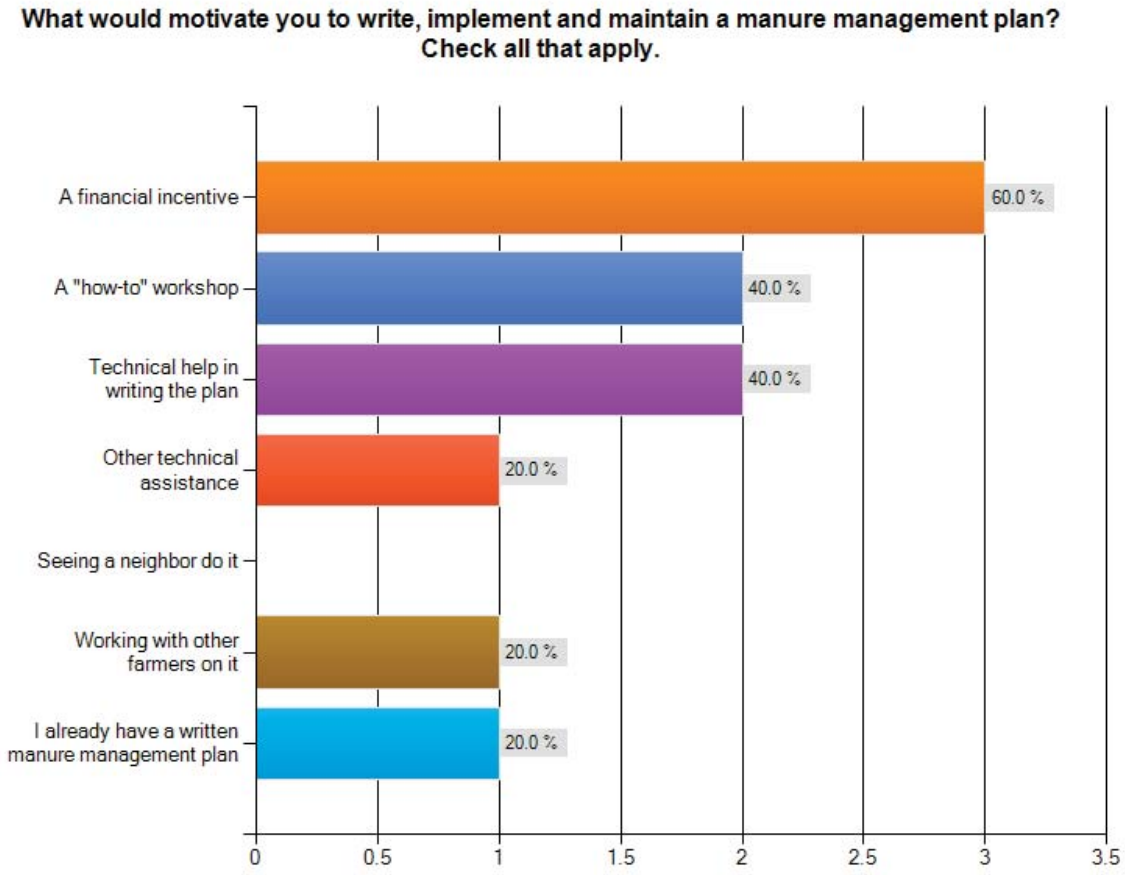

Answered question: 5
Skipped question: 15

Table 24.3 Responses by subgroup – Crosstab Q 24 x Q 8

Elm Creek Water Survey

What would motivate you to write, implement and maintain a manure management plan? Check all that apply.

	What type of farming operation do you have? Check all that apply.					
	Dairy or beef	Field crops	Both livestock and crops	Horses (hobby or personal use)	Horses (business such as breeding, boarding or training)	Response Totals
A financial incentive	33.3% (1)	0.0% (0)	50.0% (4)	41.7% (5)	33.3% (1)	45.8% (11)
A "how-to" workshop	**66.7% (2)**	**100.0% (1)**	**62.5% (5)**	**50.0% (6)**	33.3% (1)	**58.3% (14)**
Technical help in writing the plan	0.0% (0)	0.0% (0)	25.0% (2)	8.3% (1)	33.3% (1)	16.7% (4)
Other technical assistance	0.0% (0)	0.0% (0)	25.0% (2)	8.3% (1)	33.3% (1)	16.7% (4)
Seeing a neighbor do it	0.0% (0)	0.0% (0)	0.0% (0)	8.3% (1)	0.0% (0)	4.2% (1)
Working with other farmers on it	33.3% (1)	0.0% (0)	0.0% (0)	16.7% (2)	**66.7% (2)**	20.8% (5)
I already have a written manure management plan	0.0% (0)	0.0% (0)	25.0% (2)	8.3% (1)	33.3% (1)	8.3% (2)
Other (please specify)	0 replies	3 replies	0 replies	6 replies	0 replies	9
answered question	3	1	8	12	3	**24**
					skipped question	**13**

1 of 1

For the sample overall, and for the agricultural group, 58% preferred a “how-to” workshop. A financial incentive ranked second except for the municipal officials, which ranked this incentive highest at 60%. Municipal officials also ranked “technical help with writing the plan” as third. Half of all horse owners preferred a “how-to” workshop by a large margin.
Take-away: The majority of respondents prefer a how-to workshop on manure management planning, with many also opting for a financial incentive. Such options should be considered by the ECWMC.

Preferred sources of information

Q25: Where do you go to get your farming questions answered? Check all that apply

Table 25.1 All responses

Where do you go to to get your farming questions answered? Check all that apply.

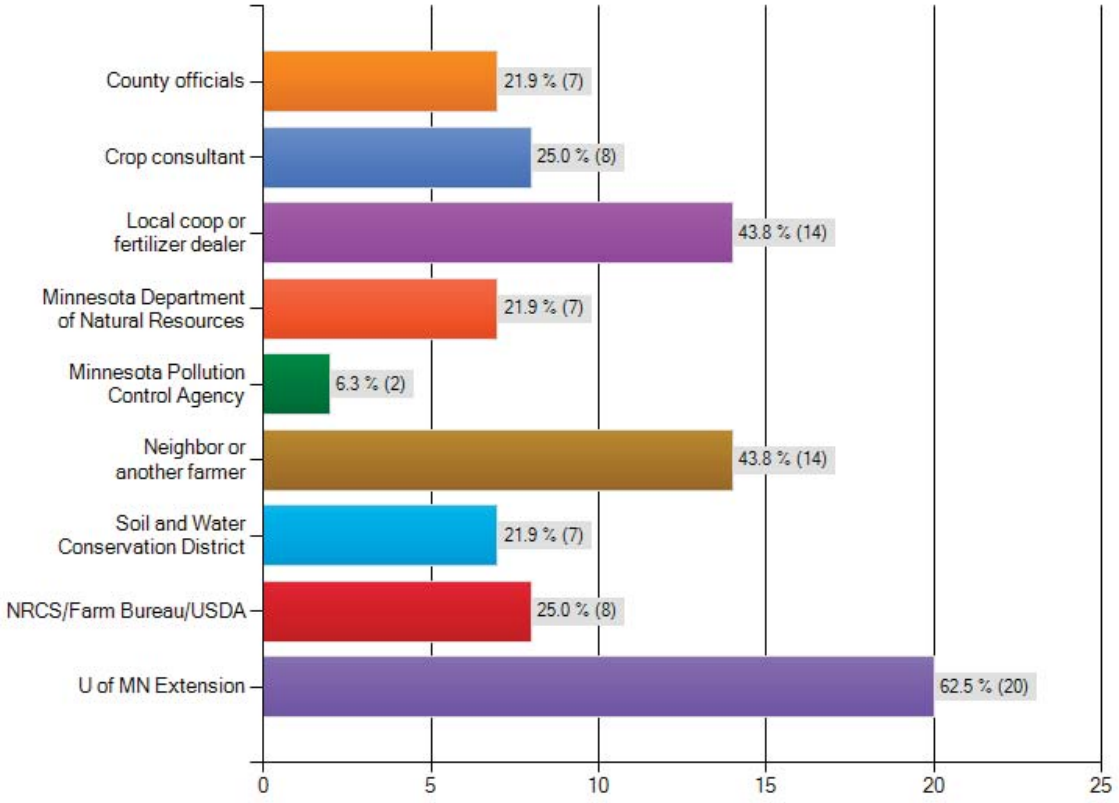

Answered question: 32
Skipped question: 28

Table 25.2 Responses of municipal officials

Where do you go to to get your farming questions answered? Check all that apply.

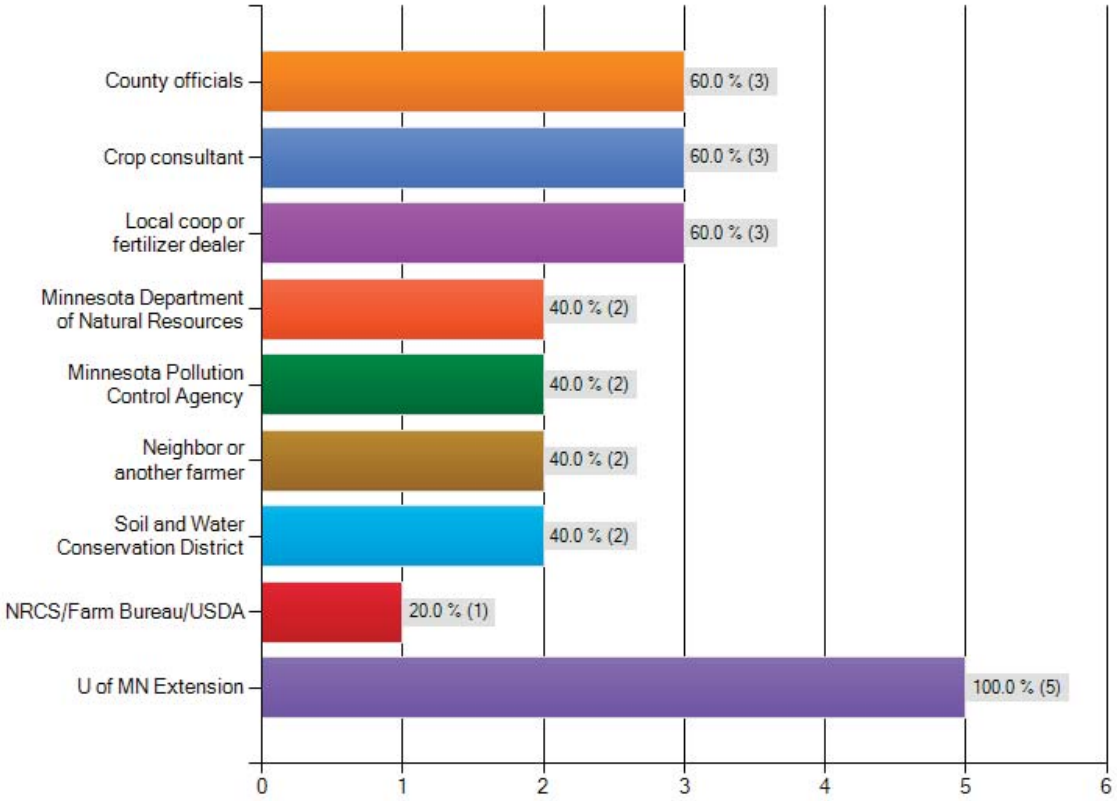

Answered question: 5
Skipped question: 15

Table 25.3 Responses by agricultural subgroup – Crosstab Q25 x Q 8

Elm Creek Water Survey

Where do you go to to get your farming questions answered? Check all that apply.

	What type of farming operation do you have? Check all that apply.					
	Dairy or beef	Field crops	Both livestock and crops	Horses (hobby or personal use)	Horses (business such as breeding, boarding or training)	Response Totals
County officials	33.3% (1)	25.0% (1)	50.0% (4)	23.5% (4)	33.3% (1)	23.3% (7)
Crop consultant	66.7% (2)	0.0% (0)	62.5% (5)	5.9% (1)	0.0% (0)	26.7% (8)
Local coop or fertilizer dealer	66.7% (2)	50.0% (2)	**75.0% (6)**	23.5% (4)	33.3% (1)	43.3% (13)
Minnesota Department of Natural Resources	**100.0% (3)**	25.0% (1)	12.5% (1)	23.5% (4)	33.3% (1)	20.0% (6)
Minnesota Pollution Control Agency	33.3% (1)	0.0% (0)	12.5% (1)	5.9% (1)	33.3% (1)	6.7% (2)
Neighbor or another farmer	33.3% (1)	0.0% (0)	25.0% (2)	47.1% (8)	**66.7% (2)**	43.3% (13)
Soil and Water Conservation District	**100.0% (3)**	0.0% (0)	37.5% (3)	17.6% (3)	33.3% (1)	23.3% (7)
NRCS/Farm Bureau/USDA	66.7% (2)	25.0% (1)	37.5% (3)	17.6% (3)	0.0% (0)	23.3% (7)
U of MN Extension	**100.0% (3)**	**100.0% (4)**	62.5% (5)	**64.7% (11)**	33.3% (1)	**63.3% (19)**
Other (please specify)	0 replies	0 replies	0 replies	3 replies	0 replies	3
answered question	3	4	8	17	3	**30**

1 of 2

For the entire sample, most respondents (63%) see the University of Minnesota UM Extension as their primary source of information on agricultural questions. Municipal staff ranked UM Extension even higher at 100%, as did livestock operators and field crop producers. Local fertilizer dealers, crop consultants and neighbors were also sought out but not ranked as highly as UM Extension. Some comments implied that ECWMC was not well known to respondents.

Take-away: ECWMC might consider partnering with Minnesota UM Extension staff (e.g. Betsy Wieland) are already known to respondents and appear to be trusted sources of information. ECWMC might consider heightening its visibility as a technical resource to local producers and residents, possibly by sponsoring (or co-sponsoring) environmental events, an open house, field days, workshops and other informational events.

Willingness to adopt a BMP

This question was posed to gauge the willingness of respondents to adopt a best management practice. Table 26.1 summarizes all responses. Table 26.2 shows the responses of municipal staff and officials. Table 26.3 summarizes responses of agricultural sub-groups.

Q26: Which clean water practices would you be willing to consider? Check all that apply.

Table 26.1 All responses

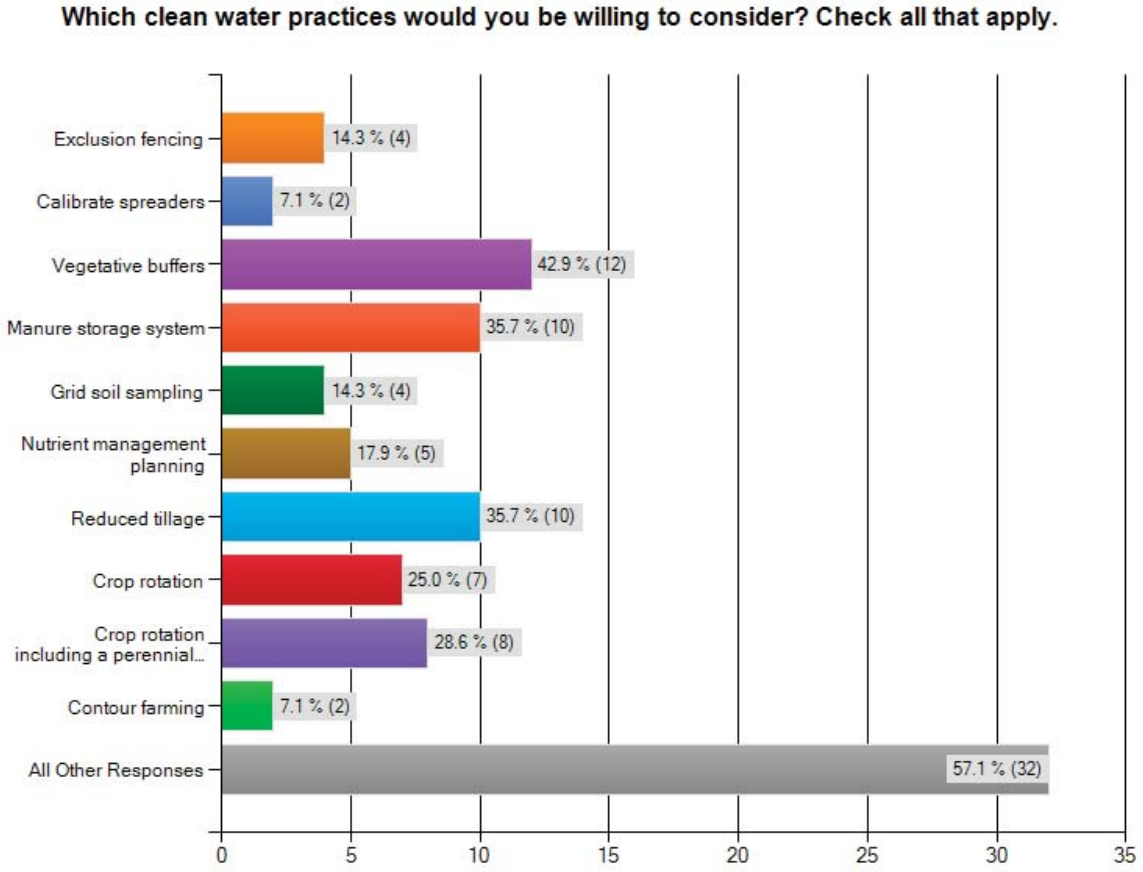

Answered question: 28
Skipped question: 32

Two respondents offered the following comments:

- I already store on concrete pad and have it hauled away
- Any, but without farm equipment or money to pay, very low motivation for our hobby

Table 26.2 Responses of municipal staff

I

Which clean water practices would you be willing to consider? Check all that apply.

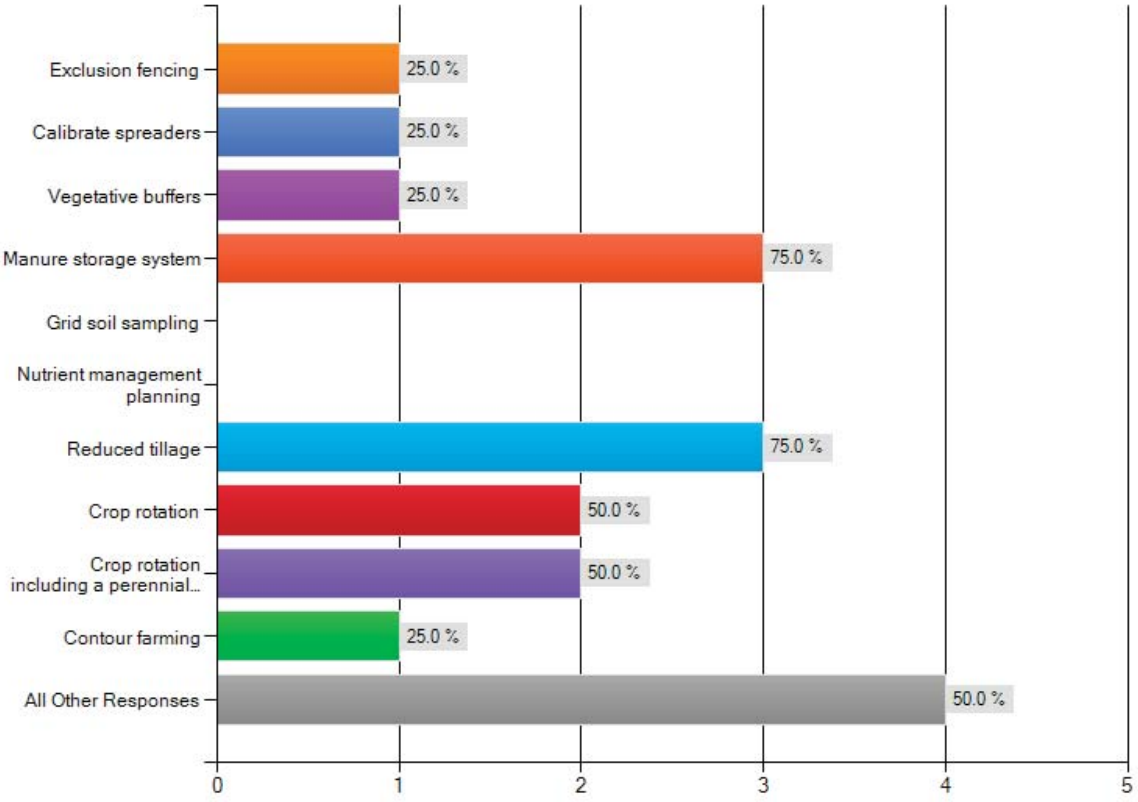

Answered question: 4
Skipped question: 16

Table 26.3 Responses by agricultural subgroups – Crosstab Q26 x Q 8

Elm Creek Water Survey

Which clean water practices would you be willing to consider? Check all that apply.

	What type of farming operation do you have? Check all that apply.					
	Dairy or beef	Field crops	Both livestock and crops	Horses (hobby or personal use)	Horses (business such as breeding, boarding or training)	Response Totals
Exclusion fencing	0.0% (0)	**50.0% (1)**	25.0% (2)	7.1% (1)	0.0% (0)	11.5% (3)
Calibrate spreaders	0.0% (0)	0.0% (0)	25.0% (2)	0.0% (0)	0.0% (0)	7.7% (2)
Vegetative buffers	33.3% (1)	**50.0% (1)**	37.5% (3)	35.7% (5)	33.3% (1)	42.3% (11)
Manure storage system	33.3% (1)	0.0% (0)	50.0% (4)	35.7% (5)	**66.7% (2)**	38.5% (10)
Grid soil sampling	0.0% (0)	0.0% (0)	37.5% (3)	7.1% (1)	0.0% (0)	15.4% (4)
Nutrient management planning	0.0% (0)	0.0% (0)	37.5% (3)	14.3% (2)	0.0% (0)	19.2% (5)
Reduced tillage	**66.7% (2)**	**50.0% (1)**	50.0% (4)	28.6% (4)	**66.7% (2)**	38.5% (10)
Crop rotation	0.0% (0)	**50.0% (1)**	**75.0% (6)**	7.1% (1)	0.0% (0)	26.9% (7)
Crop rotation including a perennial crop (hay etc.)	33.3% (1)	0.0% (0)	62.5% (5)	7.1% (1)	33.3% (1)	30.8% (8)
Contour farming	0.0% (0)	0.0% (0)	25.0% (2)	0.0% (0)	0.0% (0)	7.7% (2)
Manure management	**66.7% (2)**	**50.0% (1)**	62.5% (5)	**78.6% (11)**	**66.7% (2)**	**65.4% (17)**

1 of 2

Overall, respondents were most likely to try vegetative buffers (43%), followed by a manure storage system (36%) and reduced tillage (36%). Smaller numbers were willing to try other options (crop rotation with perennials). About 17% were willing to try nutrient management planning. Municipal officials were more willing to try reduced tillage and a manure storage system (75% each), followed by crop rotation and crop rotation with a perennial. Among all producer groups, there was highest willingness to try manure management, followed by reduced tillage.

Take-away: All producer groups are willing to try something to improve water quality. This is very good news. However, different producer groups vary in their willingness to adopt different BMPs. It may be necessary to offer different “how-to” workshops or training in a variety of BMPs. Given the small sample size for the watershed, it can be expected that such workshops would be fairly small, and each would appeal to a different group of individuals depending on their interests and information needs.

Constraints to adoption

This question explored reasons why respondents might not adopt a BMP. Table 27.1 summarizes all responses. Table 27.2 presents responses of municipal officials. Table 27.3 shows responses of agricultural sub-groups.

Q27: What prevents you from trying something to improve water quality? Check all that apply.

Table 27.1 All responses

What prevents you from trying something to improve water quality? Check all that apply.

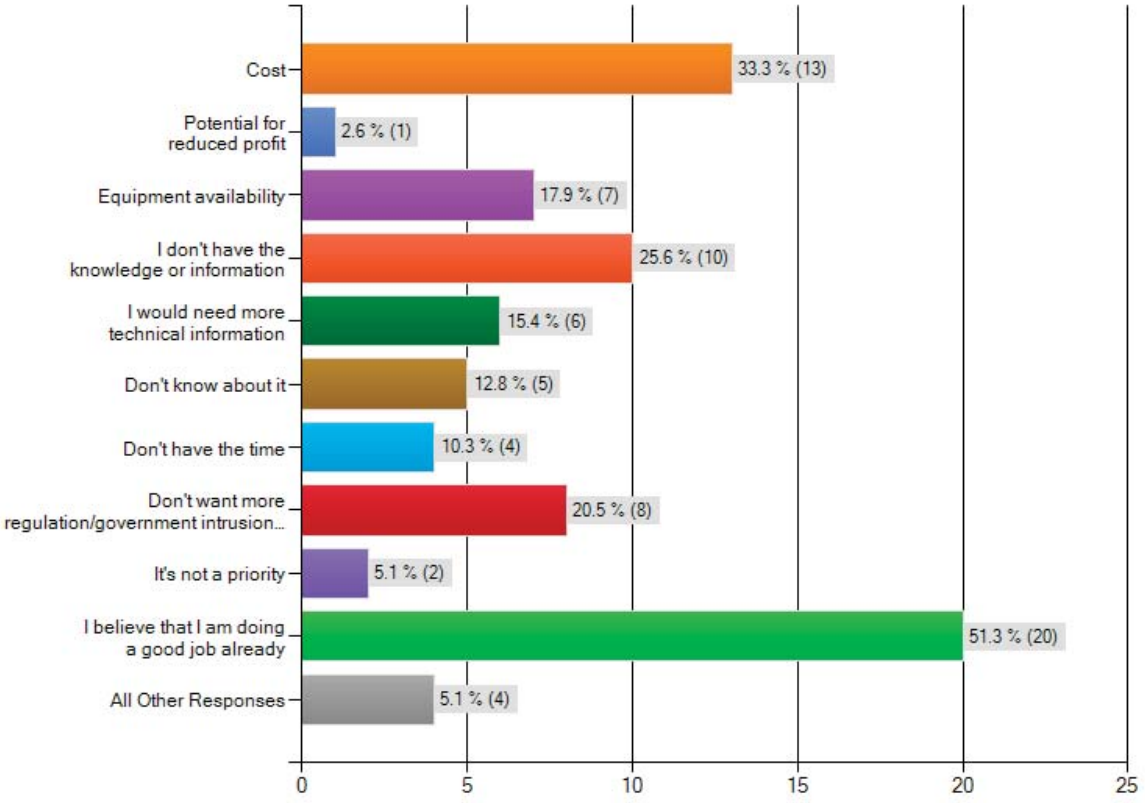

Answered question: 39
Skipped question: 21

Table 27.2 Responses of municipal staff

What prevents you from trying something to improve water quality? Check all that apply.

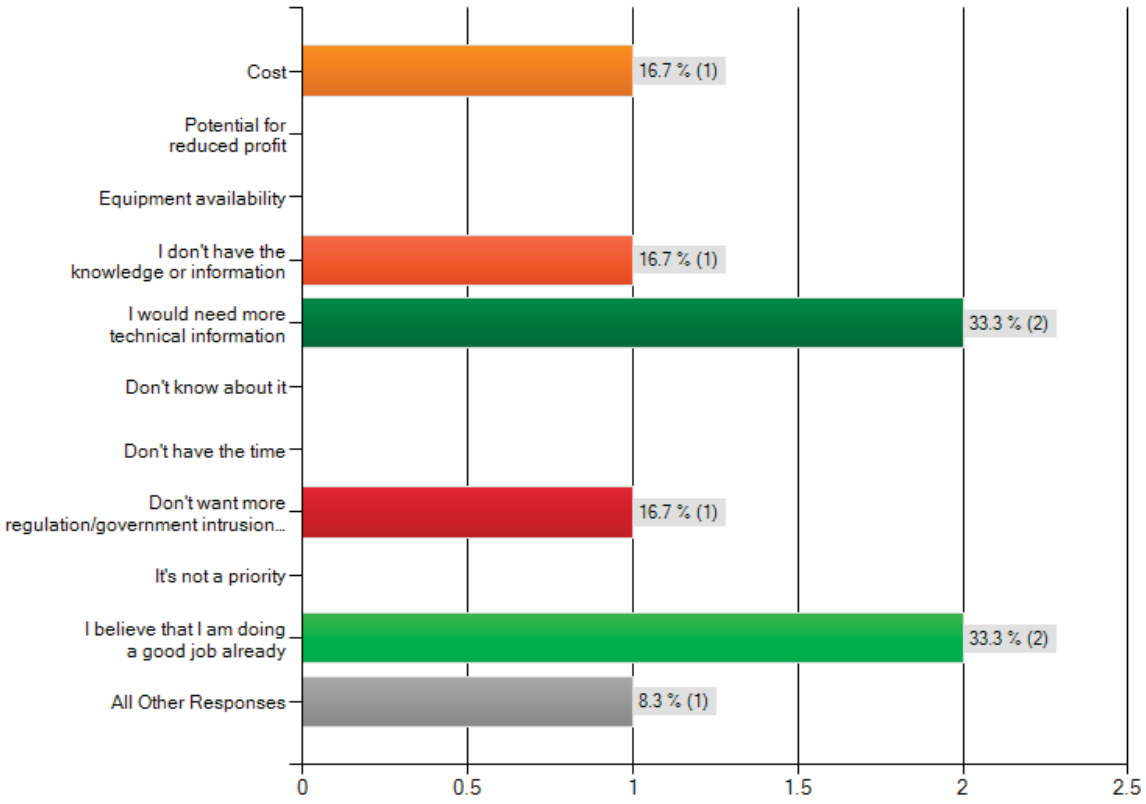

Answered question: 6
Skipped question: 14

Table 27.3 Responses by agricultural subgroups – Crosstab Q 27 x Q 8

Elm Creek Water Survey

What prevents you from trying something to improve water quality? Check all that apply.

	What type of farming operation do you have? Check all that apply.					
	Dairy or beef	Field crops	Both livestock and crops	Horses (hobby or personal use)	Horses (business such as breeding, boarding or training)	Response Totals
Cost	66.7% (2)	0.0% (0)	**37.5% (3)**	31.8% (7)	**100.0% (3)**	35.3% (12)
Potential for reduced profit	0.0% (0)	0.0% (0)	0.0% (0)	0.0% (0)	33.3% (1)	2.9% (1)
Equipment availability	0.0% (0)	0.0% (0)	12.5% (1)	18.2% (4)	66.7% (2)	20.6% (7)
I don't have the knowledge or information	0.0% (0)	**33.3% (1)**	12.5% (1)	27.3% (6)	33.3% (1)	26.5% (9)
I would need more technical information	0.0% (0)	0.0% (0)	25.0% (2)	18.2% (4)	66.7% (2)	17.6% (6)
Don't know about it	0.0% (0)	**33.3% (1)**	0.0% (0)	13.6% (3)	0.0% (0)	11.8% (4)
Don't have the time	33.3% (1)	0.0% (0)	0.0% (0)	13.6% (3)	33.3% (1)	11.8% (4)
Don't want more regulation/government intrusion into my operation	66.7% (2)	**33.3% (1)**	0.0% (0)	27.3% (6)	33.3% (1)	23.5% (8)
It's not a priority	0.0% (0)	0.0% (0)	0.0% (0)	4.5% (1)	0.0% (0)	2.9% (1)
I believe that I am doing a good job already	**100.0% (3)**	**33.3% (1)**	25.0% (2)	**59.1% (13)**	0.0% (0)	**50.0% (17)**
Neighbor doesn't want me to	0.0% (0)	0.0% (0)	0.0% (0)	4.5% (1)	0.0% (0)	2.9% (1)

1 of 2

Take-aways: For respondents overall, the most important finding is that people believe that they are already doing the right thing. Although this view may prevent them changing their practices, this is actually a very positive finding. It is likely that a communication strategy focusing on stewardship and “doing the right thing” will resonate with this worldview.

The second most important constraint for respondents is cost. In particular, agricultural groups (and especially horse business operators) seem to be more sensitive to cost concerns. A financial incentive could be of interest to some individuals (but not necessarily all) to better enable them to adopt a BMP. A third concern for all groups is the need for more information and not knowing about a BMP. There appears to be an unmet need for technical information across all groups.

At least some respondents noted other constraints (lack of equipment, lack of time etc.). Eight respondents noted that they do not want government intrusion.

Willingness to working with local government

This attitudes question explored whether respondents would work with a local government entity on water quality issues. Table 28.1 presents all responses; Table 28.2 presents municipal officials' responses; and Table 28.3 gives responses from agricultural sub-groups.

Q28: Are you open to working with your local government to identify and treat areas on your property that may be contributing to water quality issues? Check only one response.

Table 28.1 All responses

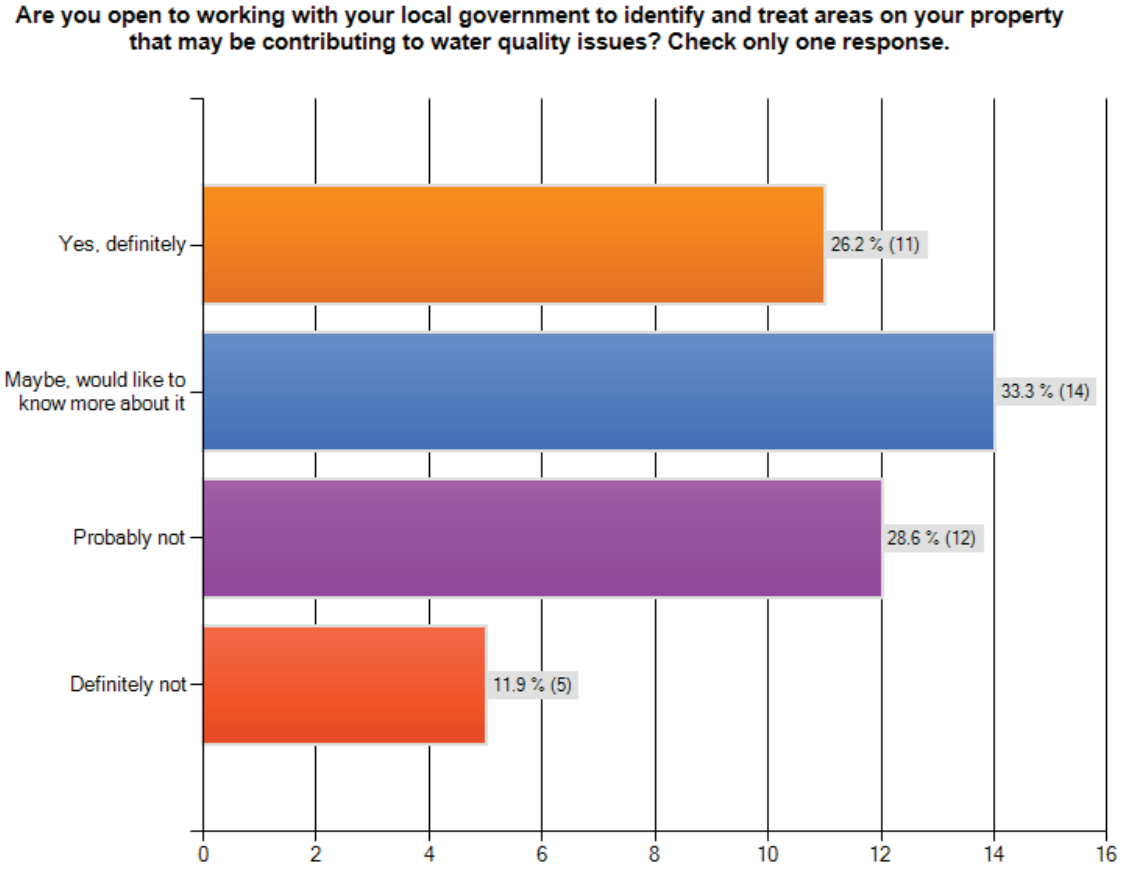

Answered question: 42
Skipped question: 18

Table 28.2 Responses of municipal officials

Are you open to working with your local government to identify and treat areas on your property that may be contributing to water quality issues? Check only one response.

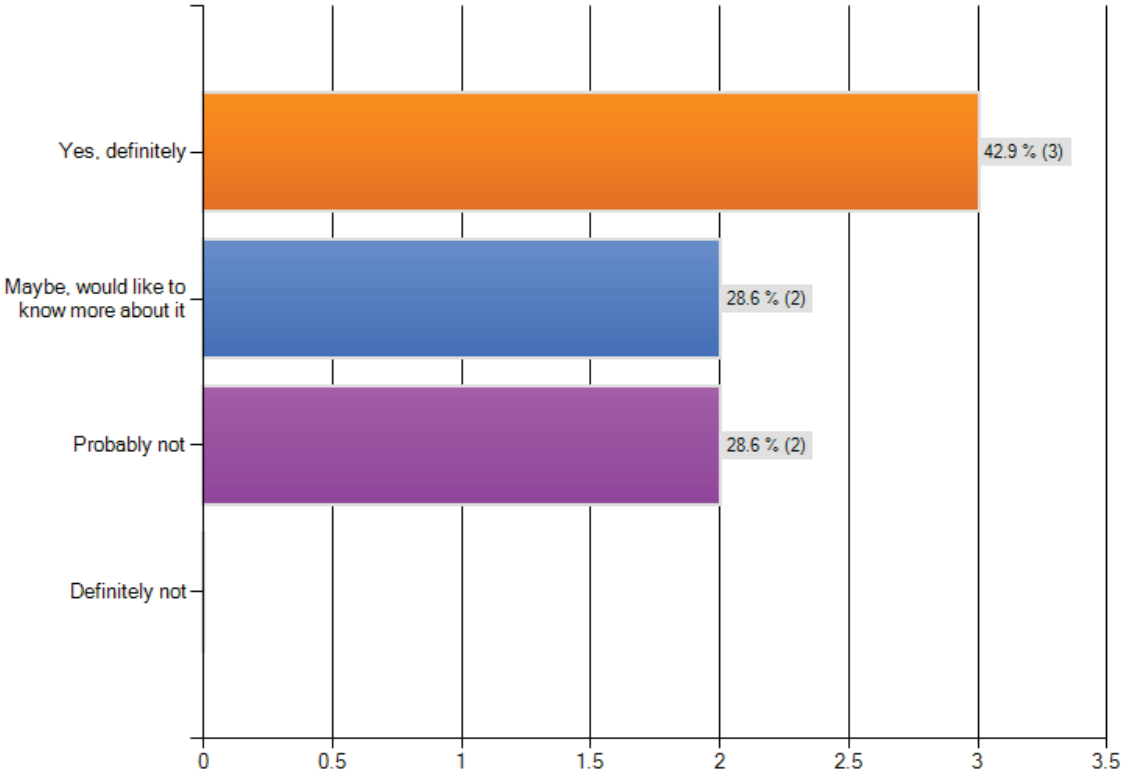

Answered question: 7
Skipped question: 13

Table 28.3 Responses by subgroup – Crosstab Q 28 x Q 8

Elm Creek Water Survey

Are you open to working with your local government to identify and treat areas on your property that may be contributing to water quality issues? Check only one response.

	What type of farming operation do you have? Check all that apply.					
	Dairy or beef	Field crops	Both livestock and crops	Horses (hobby or personal use)	Horses (business such as breeding, boarding or training)	Response Totals
Yes, definitely	0.0% (0)	**40.0% (2)**	**42.9% (3)**	21.7% (5)	**66.7% (2)**	27.8% (10)
Maybe, would like to know more about it	0.0% (0)	**40.0% (2)**	**42.9% (3)**	26.1% (6)	0.0% (0)	27.8% (10)
Probably not	**100.0% (3)**	0.0% (0)	14.3% (1)	**39.1% (9)**	0.0% (0)	**33.3% (12)**
Definitely not	0.0% (0)	20.0% (1)	0.0% (0)	13.0% (3)	33.3% (1)	11.1% (4)
Other (please specify)	1 reply	0 replies	0 replies	0 replies	0 replies	1
answered question	3	5	7	23	3	**36**
					skipped question	**1**

1 of 1

Take-aways: For survey respondents overall, the majority (almost 60%) responded positively, with either a “yes” or “maybe – would like to learn more about it.” About 40% answered in the negative, with 29% inclined not to work with local government, and 12% (*n* = 5) stating “definitely not.” 72% of municipal staff were also more inclined to do so, with 42% responding “yes,” and 29% responding “maybe.” Another 29% said “probably not,” but none said “definitely not.”

Among agricultural producer groups, only the livestock farmers (dairy/beef) were clearly uninterested in working with local government. The other groups have more mixed responses. Horse owners ranked next in terms of disinclination, although horse business owners showed more interest. Just over half (56%) of the agricultural groups were positively inclined.

Motivational mechanisms

The final attitudes question explored which mechanisms might help respondents to adopt a BMP. Table 29.1 summarizes responses for the entire sample. Table 29.2 gives responses of municipal staff and officials. Table 29.3 summarizes responses of agricultural producers.

Q29: What would help you to adopt a practice on your land that would improve water quality? Check all that apply.

Table 29.1 All responses

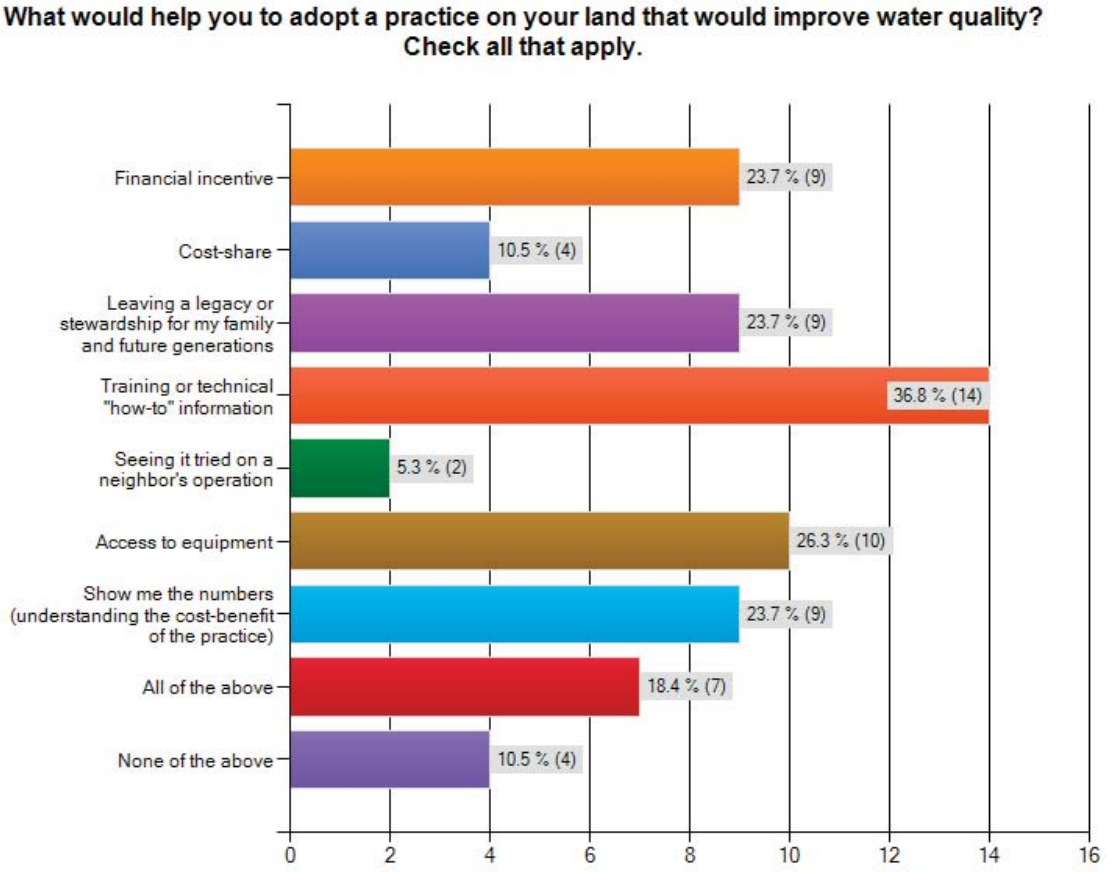

Answered question: 38
Skipped question: 22

Table 29.2 Responses of municipal staff

What would help you to adopt a practice on your land that would improve water quality? Check all that apply.

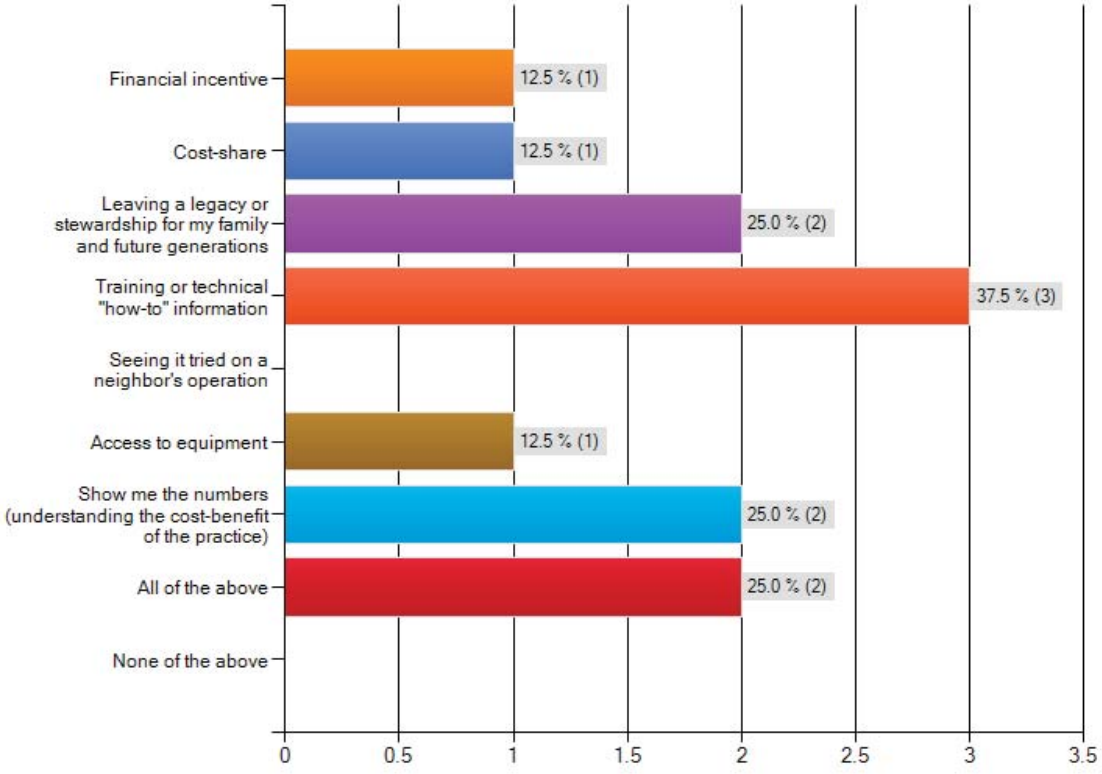

Answered question: 8
Skipped question: 12

Table 29.3 Responses by agricultural subgroup – Crosstab Q 29 x Q 8

Elm Creek Water Survey

What would help you to adopt a practice on your land that would improve water quality? Check all that apply.

	What type of farming operation do you have? Check all that apply.					
	Dairy or beef	Field crops	Both livestock and crops	Horses (hobby or personal use)	Horses (business such as breeding, boarding or training)	Response Totals
Financial incentive	0.0% (0)	20.0% (1)	25.0% (2)	25.0% (5)	**66.7% (2)**	26.5% (9)
Cost-share	0.0% (0)	0.0% (0)	12.5% (1)	10.0% (2)	33.3% (1)	11.8% (4)
Leaving a legacy or stewardship for my family and future generations	33.3% (1)	**80.0% (4)**	12.5% (1)	20.0% (4)	33.3% (1)	26.5% (9)
Training or technical "how-to" information	33.3% (1)	60.0% (3)	25.0% (2)	**40.0% (8)**	33.3% (1)	**41.2% (14)**
Seeing it tried on a neighbor's operation	0.0% (0)	0.0% (0)	12.5% (1)	0.0% (0)	33.3% (1)	5.9% (2)
Access to equipment	33.3% (1)	40.0% (2)	12.5% (1)	25.0% (5)	33.3% (1)	26.5% (9)
Show me the numbers (understanding the cost-benefit of the practice)	**66.7% (2)**	0.0% (0)	12.5% (1)	20.0% (4)	33.3% (1)	20.6% (7)
All of the above	0.0% (0)	0.0% (0)	**37.5% (3)**	15.0% (3)	**66.7% (2)**	17.6% (6)
None of the above	0.0% (0)	0.0% (0)	0.0% (0)	20.0% (4)	0.0% (0)	11.8% (4)
Other (please specify)	0 replies	0 replies	1 reply	2 replies	0 replies	3
answered question	3	5	8	20	3	**34**

1 of 2

For the entire sample and for municipal respondents, the highest ranked mechanism was training or technical “how-to” information. Agricultural producers ranked “show me the numbers” as their highest mechanism. Next most important for the overall sample was access to equipment; leaving a legacy; and a financial incentive. Cost-sharing ranked somewhat lower than a financial incentive. A similar pattern held for the municipal employees, who also ranked “show me the numbers” highly. Among agricultural groups (including horse owners) access to training and technical information ranked highest, except for livestock producers who ranked “show me the numbers” highest.

Take-away: while all mechanisms generated some interest across respondent groups, providing training and technical information is the mostly likely option for most people. Offering a financial incentive, demonstrating “the numbers,” facilitating access to equipment, and leaving a legacy are also important to all groups.

Discussion

This section summarizes general findings and impressions from the KAP study data and comments provided by respondents.

As a whole, the sample population seems more polarized in their attitudes than other KAP study respondents elsewhere in Minnesota. While there is clearly a strong undercurrent of distrust of government agencies among certain respondents, there are also indications that many respondents have a strong stewardship ethic, believe in leaving a legacy, and are interested in partnering with ECWMC. This was seen in numerous comments entered by respondents expressing concern for water quality and willingness to adopt new practices.

There is an impression in this study that respondents and stakeholders are unaware of the potential of civic engagement in the watershed planning process. Civic engagement is a *requirement* of a TMDL, and is best described as a democratic process whereby local citizens become directly involved in watershed planning, activities, education, and determining outcomes. However, civic engagement takes time and cannot be rushed, and does not happen simply by holding a facilitated public meeting. Some respondents appear to be ready to take a more active role, and there is good potential to engage them in the TMDL process.

There seems to be a general lack of awareness and familiarity with local streams and rivers, with only a handful of respondents reporting that they visit any of the water bodies in the vicinity.

There appears to be a lack of familiarity about the role and functions of ECWMC among the respondents. As a relatively young watershed agency it is likely to be unfamiliar to many residents, especially to property owners who have recently moved to the area. ECWMC is not viewed as a resource for producers. However it could potentially be viewed as an agency that might regulate an agricultural operation.

While most respondents feel that everyone is responsible for water quality, the majority do not seem to feel that their own operation is responsible for water quality issues in local water bodies. Agricultural operators tend to attribute problems to runoff from residential developments. A major challenge will be to raise awareness among all respondents about the specific causes of water impairments, and convincing property owners to accept responsibility for their role in contributing to the impairments.

On the positive side, there are many findings upon which to develop mechanisms for civic engagement, outreach and education. Most respondents understand the linkage between people's actions and water quality, and have some basic knowledge about clean water. Most are generally interested in trying something new to improve water quality, and the various sampling groups express different preferences for ways to learn about and to adopt BMPs. It is likely that people will respond to communications that are positive in tone and content, and that recognize and reward stewardship and water

conservation efforts. This study did not explore social networks or peer-to-peer communication, but there is no reason to believe that these strategies would not be successful.

Recommendations

The following recommendations for consideration by ECWMC commissioners and staff are based upon the study data as well as numerous comments provided by the respondents. They are intended to contribute to civic engagement efforts and an educational strategy and content for the ECWMC.

To foster civic engagement the following recommendations are made:

● Begin with the board. The ECWMC commissioners are effectively citizens engaged in and committed to watershed management. Board members and staff are already important civic actors by virtue of being at the table and making critical decisions about financial and natural resources. The general lack of awareness of the ECWMC might be alleviated by sponsoring an ECWMC open house, field days, and other events where board members could participate. Commissioners might consider talking with neighbors and colleagues in the watershed, inviting them to meetings and CAC meetings, and bringing them into the civic engagement process. As ECWMC becomes more active and visible in the TMDL process, it should consider creating opportunities for the public to "meet and greet" board members and staff.

● In light of the relative unfamiliarity of many residents with ECWMC it is suggested that ECWMC consider heightening its visibility and promote a positive image as an environmental resource with a focus on water quality. This may help to assuage distrust of ECWMC as a government entity, and enable the public to view ECWMC as a source of information and assistance.

● Build on the interest expressed by a number of KAP study respondents. Send out a "get involved" message to study respondents inviting them to watershed meetings and sponsored events.

● Communication with watershed residents should be built upon positive messages that reinforces fundamental self-images (doing the right thing), and encourages people to take incremental small steps to protect clean water. Communication that is based upon scolding or negative ("Don't…") messages will likely be tuned out. Moving forward, this should set the tone for future engagement and education. As noted, many respondents commented about wanting to do the right thing, and about their willingness to do something more to help the environment. There are respondents in all sample groups that are ready and willing to adopt new practices.

● Given the undercurrent of distrust in government among some residents, ECWMC should consider partnering with non-governmental entities that are locally popular with horse and livestock owners (for example, saddle clubs, YMCA/YWCA and scout camps,

veterinary practices, tack shops, horse riding schools, ag coops). Such organizations could provide a valuable entry point and access to local residents. ECWMC could sponsor recreational events with these organizations, and in the process, enable the public to learn about the watershed.

● Local expertise on civic engagement is available from MPCA and other agencies. In particular, Lynne Kolze (MPCA) has deep knowledge of CE processes and has worked successfully in other rural and urban watersheds. Betsy Wieland (MN UM Extension) is already familiar with livestock and horse owners in the area, representing the agency which is already the most important source of information for watershed communities. It is strongly recommended that both experts be brought in to the CE process.

To foster the adoption and maintenance of clean water practices, the following actions are recommended:

● Respondents expressed a clear need and desire for technical information, training and education, and was respondents' top priority overall. It is strongly recommended that ECWMC consider developing and implementing a comprehensive, targeted education and outreach strategy. This should include multiple learning opportunities to meet the priorities and needs of diverse sub-groups in the watershed that impact local waters. Based upon the experience of other watershed districts and commissions in Minnesota, this is best done by recruiting an experienced staff member. Such watershed educators often work together on various initiatives and partnerships, and may be joined by MN UM Extension staff. However, there is no substitute for a water quality educator that is very familiar with local groups and individual property owners, and who can build trust and productive partnerships. A good education programmer can also complement the civic engagement efforts that are required by the TMDL process.

● Financial incentives and cost-shares may be helpful for some individuals to adopt a BMP. However, financial incentives may not appeal to everyone, especially in affluent communities. A 2011 KAP study of shoreland property owners in northern Minnesota found that most people didn't need or want a financial incentive to adopt a BMP. The audience adopted because they believed that was the right thing to do, and enabled them to act on their stewardship values ethics (often involving children and grandchildren in the process). The most important mechanism to them was direct access to a technical professional who could show them what to do. They needed a site visit by a watershed technician, and/or a hands-on workshop. The "human touch" (also called a "high touch" approach) can be much more important to property owners than a financial incentive, and more effective in fostering clean water actions. These options need not be mutually exclusive.

● Most of the possible mechanisms and incentives appealed to at least some sample sub-groups, but not necessarily to all. Results suggest that the best approach is to offer

multiple opportunities to learn about different BMPs. Given the small sample size, and diverse nature of the sub-groups, ECWMC should consider offering small hands-on workshops or other learning opportunities for targeted groups. This will require developing content-specific workshop materials and curricula. Examples are given in Table 30 below.

Table 30: Examples of workshops for targeted sub-groups

Sub group	Content/subjects
Livestock owners (dairy/beef)	"Show me the numbers" (cost-benefit); Manure management planning; Nutrient management planning; Cost-share/incentive information; Reduced tillage; Vegetative buffers; Manure storage; Crop rotation
Field crop producers	Cost-share/incentive information; Nutrient management planning; Cost-share/incentive information; Reduced tillage; Vegetative buffers; Crop rotation
Both livestock and field crops	Manure management planning; Nutrient management planning; Cost-share/incentive information; Reduced tillage; Vegetative buffers; Manure storage; Crop rotation
Horse owners	Cost-share/incentive information; Manure management planning; Vegetative buffers; Manure storage; Managed grazing/exclusion fencing
Horse-related businesses	Manure management planning; Cost-share/incentive information; Vegetative buffers; Manure storage; Managed grazing/exclusion fencing
All respondents and the general public	Field days/trips to local water bodies; Residential stormwater management; Basic watershed planning for citizens;
Municipal officials and staff	NEMO curricula; The Watershed Game; Civic engagement processes and practices

● Finally, evaluation of outcomes is essential to determine whether investments in water quality activities have reaped benefits in this watershed. The ECWMC monitoring program will be able to determine whether impairments have been diminished.

Evaluating the “people” aspects will also be needed, e.g. did people actually become engaged in watershed planning through the CE process, and how will that be measured? Did people actually adopt and maintain recommended practices? Did they acquire new knowledge and awareness of the condition of local water bodies? It is recommended that a repeat (summative) KAP study be conducted in approximately two years (depending on the TMDL/WRAPP implementation schedule) to collect evidence of program outcomes.

Acknowledgements

The author thanks the Elm Creek Watershed Management Commission for funding to carry out this research. Funding originated with Environmental Protection Agency's 319 grant program, administered by the Minnesota Pollution Control Agency. Special thanks to Lynne Kolze at MPCA for continued support for the KAP study and civic engagement work, and to Barb Peichel as the project manager. The author is grateful to Judie Anderson and Rich Brasch of the ECWMC for their involvement in the gap exercise and for support to the KAP process throughout. Marylee Murphy of Three Rivers Park District prepared the survey sample list.

In addition, several local stakeholders and officials took part in the gap exercise that was the basis for this KAP study, and contributed valuable comments that helped to shape the study**. These included Elizabeth Weir, Cindy Patnode, Dan Patnode, Bill Kidder, James Kujawa, Ali Durgunoglu, Betsy Wieland, Rich Brasch and Judie Anderson**

Finally, the participation of sixty individual respondents in taking part in this study is gratefully acknowledged.

References

Eckman, Karlyn. 2013. *Training Modules for Evaluating the Social Outcomes of Water Quality Projects.* Saint Paul: Minnesota Pollution Control Agency.

Wieland, Betsy. Undated. *Medina Livestock Water Quality BMP Survey Highlights*. University of Minnesota UM Extension.

Appendix H: Elm Creek Watershed TMDL Implementation Cost Estimate

Project Element Description	Average Unit Cost Range	Total Cost Range
25,000 feet of stream channel rehabilitation/habitat improvement[3]	$150-$300/ft. of channel	$3.75 - $7.5 million
20 large urban stormwater retro-fit projects[1]	$80,000-$160,000/project	$1.6 - $3.2 million
50 small urban stormwater retro-fit projects[1]	$15,000 - $30,000/project	$750,000 - $1,500,000
20 wetland restoration projects[3]	$40,000 - $80,000/project	$800,000-$1.6 million
10 livestock feedlot/pasture improvement projects[2]	$25,000-$50,000/project	$250,000 - $500,000
50,000 feet of row crop field buffers [2]	$10-$20/foot	$500,000-$1,000,000
300 development reviews for compliance w/ ECWMC standards[1]	$200-$400/review	$60,000-$120,000
Curly leaf pondweed control in lakes (5 lakes/1200 ac. for 7 years)[2]	$200-$300/ac./yr.	$1.68 - $2.52 million
Immobilization of phosphorus release from enriched lake sediments (4 lakes/550 ac.)[2]	$1,500-$2,500/ac.	$825,000 - $1.375 million
50 septic system upgrades[2]	$4,000 - $8,000/system	$200,000 - $400,000
1 NPDES point source compliance (Maple Hills Estates WWTP)[1]	$400,000 - $800,000/system	$400,000-$800,000
Urban/rural-agricultural education efforts (20 years)[3]	$10,000-$20,000/year	$200,000 - $400,00
Sub-total		$10,815,000-$20,550,000
20% contingency		$2,163,000 - $3,810,000
TOTAL		$12,078,000 - $24,660,000

[1] Applies to permitted sources

[2] Applies to non-permitted source

[3] Applies to both permitted and non-permitted sources

Appendix I

Affected MS4s By Impaired Water

Stream/Lake Name (ID #)[1]	Impairment	MS4s with WLAs	MS4 Permit #	Type
Diamond Creek (-525)	*E. coli*	Dayton	MS400083	City
	Biota (TSS)	Dayton	MS400083	City
		Rogers	Not assigned	City
		Hennepin County	MS400138	Non-traditional
		MnDOT Metro District	MS400170	Non-traditional
	Biota (TP)	Dayton	MS400083	City
		Rogers	Not assigned	City
		Hennepin County	MS400138	Non-traditional
Rush Creek, South Fork (-760)	Biota (TP)	Corcoran	MS400081	City
		Medina	MS400105	City
Rush Creek, South Fork (-732)	*E. coli* and Biota (TP)	Corcoran	MS400081	City
		Maple Grove	MS400102	City
		Medina	MS400105	City
		Hennepin County	MS400138	Non-traditional
Rush Creek, Mainstem (-528)	*E. coli*	Corcoran	MS400081	City
		Dayton	MS400083	City
		Maple Grove	MS400102	City
		Rogers	Not assigned	City
		Hennepin County	MS400138	Non-traditional
	Biota (TP)	Corcoran	MS400081	City
		Dayton	MS400083	City
		Maple Grove	MS400102	City
		Medina	MS400105	City
		Rogers	Not assigned	City
		Hennepin County	MS400138	Non-traditional
		MnDOT Metro District	MS400170	Non-traditional
Elm Creek (-508)	E. coli	Corcoran	MS400081	City
		Champlin	MS400008	City
		Dayton	MS400083	City
		Maple Grove	MS400102	City
		Medina	MS400105	City
		Plymouth	MS400112	City
		Hennepin County	MS400138	Non-traditional
		MnDOT Metro District	MS400170	Non-traditional

	Biota (TSS)	Champlin	MS400008	City
		Corcoran	MS400081	City
		Dayton	MS400083	City
		Maple Grove	MS400102	City
		Medina	MS400105	City
		Plymouth	MS400112	City
		Hennepin County	MS400138	Non-traditional
		MnDOT Metro District	MS400170	Non-traditional
	Biota (TP)	Champlin	MS400008	City
		Corcoran	MS400081	City
		Dayton	MS400083	City
		Maple Grove	MS400102	City
		Medina	MS400105	City
		Rogers	Not assigned	City
		Hennepin County	MS400138	Non-traditional
		MnDOT Metro District	MS400170	Non-traditional
Fish Lake (ID # 27-0118)	Nutrients	None	N/A	N/A
Rice Lake (ID # 27-0116-01)	Nutrients	Corcoran	MS400081	City
		Maple Grove	MS400102	City
		Medina	MS400105	City
		Plymouth	MS400112	City
		Hennepin County	MS400138	Non-traditional
		MnDOT Metro District	MS400170	Non-traditional
Diamond Lake (ID # 27-0125)	Nutrients	Dayton	MS400083	City
		Rogers	Not assigned	City
		Hennepin County	MS400138	Non-traditional
		MnDOT Metro District	MS400170	Non-traditional
Goose Lake (ID # 27-0122)	Nutrients	Champlin	MS400008	City
		Dayton	MS400083	City
		Hennepin County	MS400138	Non-traditional
		MnDOT Metro District	MS400170	Non-traditional
Cowley Lake (ID # 27-0169)	Nutrients	Rogers	Not assigned	City
		Hennepin County	MS400138	Non-traditional
Sylvan Lake (ID # 27-0171)	Nutrients	Rogers	Not assigned	City
Henry Lake (ID # 27-0175)	Nutrients	None	N/A	N/A

[1] 8-digit HUC for all AUID stream reaches is 07010206

Elm Creek Watershed
(Upper Mississippi River Basin)
Watershed Restoration and Protection Strategy

December 2016

elm creek
Watershed Management Commission

Minnesota Pollution Control Agency

wq-ws4-27a

CLEAN WATER LAND & LEGACY AMENDMENT

Project Partners

The following organizations and agencies contributed to the development of the Elm Creek Watershed Restoration and Protection Strategies document:

Elm Creek Watershed Management Commission:

- City of Champlin
- City of Corcoran
- City of Dayton
- City of Maple Grove
- City of Medina
- City of Plymouth
- City of Rogers

Hennepin County Environment and Energy Department

Three Rivers Park District

Metropolitan Council Environmental Services

Minnesota Department of Agriculture

Minnesota Department of Natural Resources

Minnesota Department of Transportation

Minnesota Pollution Control Agency

University of Minnesota Extension Services

Wenck Associates, Inc.

*Note Regarding Legislative Charge

The science, analysis and strategy development described in this report began before accountability provisions were added to the Clean Water Legacy Act in 2013 (MS114D); thus, this report may not address all of those provisions. When this watershed is revisited (according to the 10-year cycle), the information will be updated according to the statutorily required elements of a Watershed Restoration and Protection Strategy Report.

Table of Contents

List of Figures

List of Tables

Key Terms

Assessment Unit Identifier (AUID): The unique water body identifier for each river reach comprised of the United States Geological Survey (USGS) eight-digit hydrologic unit code (HUC) plus a three-character code unique within each HUC.

Aquatic life impairment: The presence and vitality of aquatic life is indicative of the overall water quality of a stream. A stream is considered impaired for impacts to aquatic life if the fish Index of Biotic Integrity (IBI), macroinvertebrate IBI, dissolved oxygen, turbidity, or certain chemical standards are not met.

Aquatic recreation impairment: Streams are considered impaired for impacts to aquatic recreation if fecal bacteria standards are not met. Lakes are considered impaired for impacts to aquatic recreation if total phosphorus, chlorophyll-a (Chl-*a*), or Secchi disc depth standards are not met.

Hydrologic Unit Code (HUC): A Hydrologic Unit Code (HUC) is assigned by the USGS for each watershed. HUCs are organized in a nested hierarchy by size. For example, the Upper Mississippi-Crow-Rum River Basin is assigned a HUC-4 of 070102 and the Twin Cities Watershed is assigned a HUC-8 of 07010206.

Impairment: Water bodies are listed as impaired if water quality standards are not met for designated uses including: aquatic life, aquatic recreation, and aquatic consumption.

Index of Biotic integrity (IBI): A method for describing water quality using characteristics of aquatic communities, such as the types of fish and invertebrates found in the waterbody. It is expressed as a numerical value between 0 (lowest quality) to 100 (highest quality).

Protection: This term is used to characterize actions taken in watersheds of waters not known to be impaired to maintain conditions and beneficial uses of the waterbodies.

Restoration: This term is used to characterize actions taken in watersheds of impaired waters to improve conditions, eventually to meet water quality standards and achieve beneficial uses of the waterbodies.

Source (or Pollutant Source): This term is distinguished from 'stressor' to mean only those actions, places or entities that deliver/discharge pollutants (e.g., sediment, phosphorus, nitrogen, pathogens).

Stressor (or Biological Stressor): This is a broad term that includes both pollutant sources and non-pollutant sources or factors (e.g., altered hydrology, dams preventing fish passage) that adversely impact aquatic life.

Total Maximum Daily Load (TMDL): A calculation of the maximum amount of a pollutant that may be introduced into a surface water and still ensure that applicable water quality standards for that water are met. A TMDL is the sum of the wasteload allocation (WLA) for point sources, a load allocation (LA) for nonpoint sources and natural background, an allocation for future growth (i.e., reserve capacity), and a margin of safety (MOS) as defined in the Code of Federal Regulations.

Acronyms

ac-ft	acre-feet
AUID	Assessment Unit ID
BATHTUB	A model to assess nutrients in lakes
BMP	Best Management Practice
BWSR	Board of Water and Soil Resources
cfu	colony-forming unit
Chl-*a*	Chlorophyll-*a*
CMP	Chloride Management Plan
CWLA	Clean Water Legacy Act
DNR	Minnesota Department of Natural Resources
DO	Dissolved oxygen
EBI	Environmental Benefit Index
ECWMC	Elm Creek Watershed Management Commission
EPA	Environmental Protection Agency
FLUX	Model to predict flow weighted nutrients in streams
Ft	feet
HUC	Hydrologic unit code
LiDAR	Light Detection and Ranging
IBI	Index of Biotic Integrity
KAP	Knowledge, Attitudes, and Practices
LA	Load Allocation
lb/yr	pounds per year
m	meter
MDA	Minnesota Department of Agriculture
mg/L	milligrams per liter
mg/m^2-day	milligram per square meter per day
mL	milliliter
MnDOT	Minnesota Department of Transportation

MOS	Margin of Safety
MPCA	Minnesota Pollution Control Agency
MS4	Municipal Separate Storm Sewer System
NEMO	Nonpoint Education for Municipal Officials
NCHF	North Central Hardwood Forest
NRCS	Natural Resources Conservation Service
PREP	Protection, Restoration, Education, and Prevention
RUSLE	Revised Universal Soil Loss Equation
SW	Stormwater
SSTS	Subsurface Sewage Treatment Systems
SWAG	Surface Water Assessment Grant
SWAT	Soil and Water Assessment Tool
TAC	Technical Advisory Committee
TMDL	Total Maximum Daily Load
TP	Total Phosphorus
TSS	Total Suspended Solids
UMD	University of Minnesota Duluth
UMN	University of Minnesota
µg/L	microgram per liter
USGS	United States Geological Survey
WHAF	Watershed Health Assessment Framework
WLA	Wasteload Allocation
WMC	Watershed Management Commission
WQ	Water quality
WRAPS	Watershed Restoration and Protection Strategy
WWTP	Wastewater Treatment Plant

Executive Summary

Several streams and lakes within the Elm Creek Watershed are impaired for aquatic life use, aquatic recreation use and have high levels of *E. coli* bacteria. Agricultural runoff, stormwater runoff and stream bank erosion are having negative effects on the watershed's water quality. Agricultural and livestock activities and urban development in the watershed have resulted in runoff that carries excess phosphorus, sediment, and bacteria into bodies of water that degrades water quality and is harmful to aquatic life.

The intent of this Watershed Restoration and Protection Strategy (WRAPS) report was to develop a scientifically-based restoration and protection strategy for the Elm Creek Watershed. This WRAPS summarizes past efforts to monitor water quality, identifies impaired water bodies and those in need of protection, and identifies strategies for restoring and protecting water quality in the watershed. The strategies included in this report target point and non-point sources of pollution and include installing buffers, stabilizing stream banks, reducing in-lake nutrients, improving stormwater management and livestock management to help improve water quality in the watershed.

What is the WRAPS Report?

The state of Minnesota has adopted a "watershed approach" to address the state's 80 "major" watersheds (denoted by 8-digit hydrologic unit code or HUC). This watershed approach incorporates **water quality assessment, watershed analysis, civic engagement, planning**, **implementation**, and **measurement of results** into a 10-year cycle that addresses both restoration and protection.

As part of the watershed approach, waters not meeting state standards are still listed as impaired and Total Maximum Daily Load (TMDL) studies are performed, as they have been in the past, but in addition the watershed approach process facilitates a more cost-effective and comprehensive characterization of multiple water bodies and overall watershed health. A key aspect of this effort is to develop and utilize watershed-scale models and other tools to help state agencies, local governments and other watershed stakeholders determine how to best proceed with restoring and protecting lakes and streams. This WRAPS report summarizes past assessment and diagnostic work and outlines ways to prioritize actions and strategies for continued implementation.

Purpose	•Support local working groups and jointly develop scientifically-supported restoration and protection strategies to be used for subsequent implementation planning •Summarize Watershed Approach work done to date including the following reports: •*Mississippi River-Twin Cities Monitoring and Assessment Report - 2013* •*Elm Creek Watershed Management Commission - 2015* •*Elm Creek Watershed Stressor Identification Report - 2015* •*Elm Creek Watershed Total Maximum Daily Load Study - 2016*
Scope	•Impacts to aquatic recreation and impacts to aquatic life in streams •Impacts to aquatic recreation in lakes
Audience	•Local working groups (local governments, SWCDs, watershed management groups, etc.) •State agencies (MPCA, DNR, BWSR, etc.)

1. Watershed Background & Description

The Elm Creek Watershed is located in the upper Mississippi River Basin. The watershed is approximately 104 square miles, or about 66,400 acres, in extent and lies in northwestern Hennepin County. The watershed includes parts of seven Twin Cities Metro Area municipalities – Medina, Plymouth, Corcoran, Maple Grove, Rogers, Dayton, and Champlin. The entire watershed is within the North Central Hardwood Forest (NCHF) ecoregion. Surface water flows in the watershed are from south and west to north and east. Based on 2010 land use data, only about 25% of the watershed is developed, and the development is clustered in the eastern part of the watershed and along the Interstate 94 corridor (Figure 1-1). The remainder of the watershed is predominantly agricultural (32.1%) and undeveloped (27.2%). Most of the rural and agricultural (non-developed) land uses are in the upper reaches of the major stream systems draining the area.

Figure 1-1. Land cover in the Elm Creek Watershed

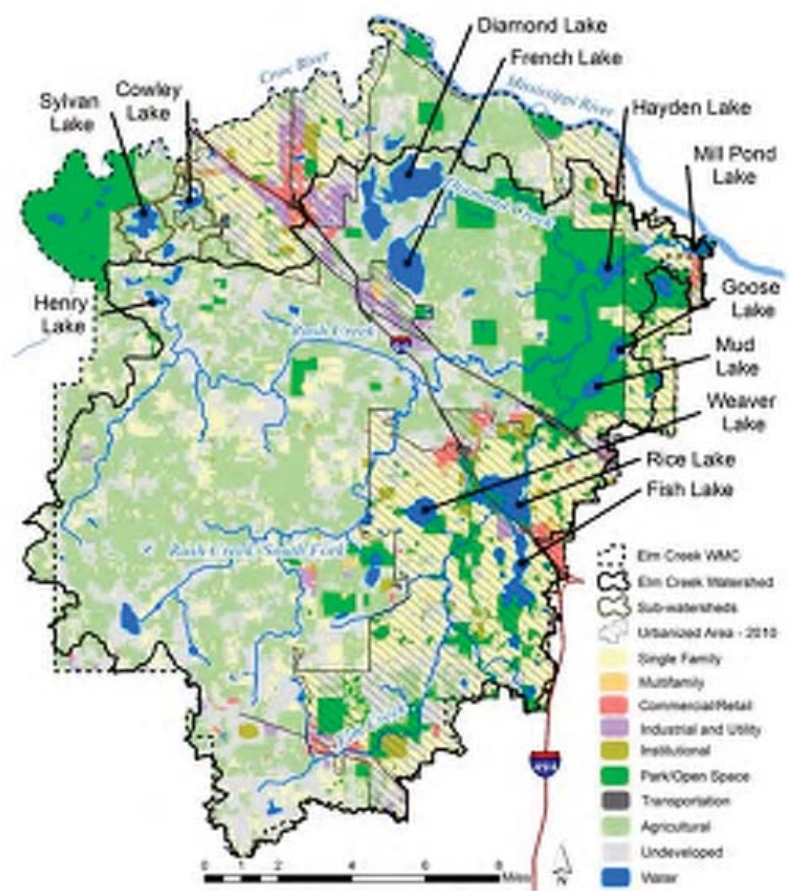

Additional Elm Creek Watershed Resources

Elm Creek Watershed Management Commission
Elm Creek TMDL, Protection and Implementation Plan
Elm Creek Watershed Stressor Identification Report
Elm Creek USDA Natural Resources Conservation Service (NRCS) Rapid Watershed Assessment
Elm Creek Stream Health Evaluation (2010) - Hennepin County
Mississippi River-Twin Cities Monitoring and Assessment Report
Mississippi River Watershed DNR Assessment Mapbook
Twin Cities Metro Area Chloride TMDL

2. Watershed Conditions

The Elm Creek Watershed has a rural and agricultural land use-dominated headwater region that transitions to more suburban/urban land uses in the lower portions of the watershed. Impairments are common throughout the watershed, but the severity of those impairments generally decreases - especially in the stream systems - as one moves from upstream to downstream. Fish Lake and Weaver Lake in Maple Grove are the only two deep lakes in the watershed. The remaining open water bodies in the watershed are either shallow lakes or wetlands. In most cases, these shallow water bodies are moderately to severely degraded**.** Figure 2-1 shows the impaired and unimpaired lakes in the watershed as well as the stream reaches that are listed as impaired. Note that the eight digit HUC prefix for all stream Assessment Unit IDs (AUIDs) shown in Figure 2-1 is 07010206.

Figure 2-1. Impaired lakes and stream reaches in the Elm Creek Watershed

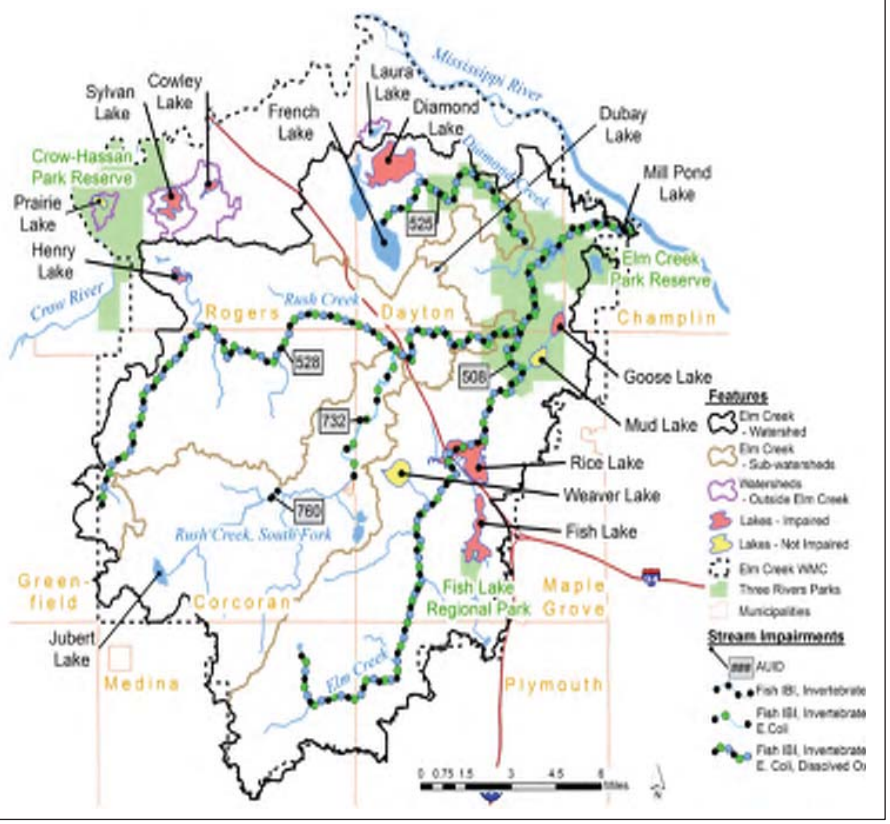

Not all of the lakes and stream segments in the watershed were assessed due to insufficient data, limited resource waters, or predominantly channelized stream reaches. What is known about the condition of these streams and lakes including associated pollutant sources is summarized in the following sections.

2.1 Condition Status

Stream conditions throughout the watershed were assessed using a range of parameters including fish and invertebrate indices of biotic integrity, *E. coli*, dissolved oxygen (DO), total suspended solids (TSS), and total phosphorus (TP). Water quality measurements were compared to state water quality standards. Stream conditions and impairment assessment for Elm Creek Watershed AUID's are summarized in Table 2-1. In general, stream quality is lowest in the upper reaches of the watershed that are dominated by rural and agricultural land uses and improves somewhat as one moves downstream into the more developed portion of the watershed. The pattern is similar but less well-defined for lakes, with most of the shallow lakes throughout the watershed severely impaired and the deep lakes (both of

which are within the developed portion of the watershed) meeting or close to meeting standards. All of the streams and lakes in the Elm Creek Watershed that have been placed on the state of Minnesota's 303(d) list have received TMDL allocations, which are summarized in Section 2.4 of this report. Some of the waterbodies in the Elm Creek Watershed are impaired by chloride and mercury; however, this report does not cover toxic pollutants. For more information on the chloride impairments see the Twin Cities Metropolitan Area Chloride TMDL and Chloride Management Plan (CMP). For the mercury impairments see the Statewide Mercury TMDL.

Streams

Of the 14 stream AUIDs in the Elm Creek Watershed, five reaches were assessed for biotic integrity and none were found to fully support aquatic life. All five of the assessed reaches were identified as impaired for both fish and macroinvertebrate Index of Biotic Integrity (IBI). The remaining AUIDs were found to be intermittent streams and/or have insufficient data to determine aquatic life impairment.

The Elm Creek Watershed Management Commission (ECWMC), Minnesota Pollution Control Agency (MPCA), U.S. Geological Survey (USGS), Hennepin County, and Three Rivers Park District have conducted periodic and routine sampling for conventional pollutants at various mainstem and tributary monitoring stations throughout the watershed. Through this monitoring, three reaches were found to be impaired for low DO, four for *E. coli* bacteria, and two for high chloride.

Table 2-1. Assessment status of stream reaches in the Elm Creek Watershed, presented (mostly) from west to east

HUC-8 Subwatershed	AUID (Last 3 digits)	Stream	Reach Description	Aquatic Life				Aq Rec
				Fish Index of Biotic Integrity	Macroinvertebrate Index of Biotic Integrity	DO	Chloride	Bacteria
Upper Mississippi River (7010206)	-760	Rush Creek, S. Fk. (upper)	Un-named ditch to Co. Ditch 16	Imp	Imp	NA	Sup	NA
	-732	Rush Creek. S. Fk. (lower)	Un-named lake to Rush Creek	Imp	Imp	NA	Imp	Imp
	-528	Rush Creek mainstem	Headwaters to Elm Creek	Imp	Imp	Imp	Sup	Imp
	-525	Diamond Creek	Headwaters (French Lake) to Un-named lake	Imp	Imp	Imp	Sup	Imp
	-058	Elm Creek	Headwaters (Lake Medina) to Mississippi River	Imp	Imp	Imp	Imp	Imp

Sup = found to meet the water quality standard, Imp = does not meet the water quality standard and therefore, is impaired, IF = the data collected was insufficient to make a finding, NA = not assessed

Lakes

All 13 lakes addressed in this report (9 lakes in the Elm Creek hydrologic watershed plus Sylvan, Cowley, Prairie, and Laura, which lie in the North Fork Crow River hydrologic watershed) are classified as 2B

waters for which aquatic life and recreation are the protected beneficial uses. Minnesota standards for all Class 2 waters states ". . . there shall be no material increase in undesirable slime growths or aquatic plant including algae." To evaluate whether a lake is in an impaired condition, the MPCA developed "numeric translators" for the narrative standard for purposes of determining which lakes should be included in the section 303(d) list as being impaired for nutrients. The translators established for TP, chlorophyll-a (Chl-*a*), and water clarity as measured by Secchi depth. Of the lakes in the Elm Creek Watershed project area that were assessed, seven were identified as being impaired for nutrients (Table 2-2).

Table 2-2. Assessment status of lakes in the Elm Creek/Crow River Watershed

HUC-8 Subwatershed	Lake ID	Lake	Aquatic Recreation
Elm Creek	27-0125	Diamond Lake	Imp
	27-0118	Fish Lake	Imp
	27-0117	Weaver Lake	Sup
	27-0175	Henry Lake	Imp
	27-0116-01	Rice Lake-Main	Imp
	27-0122	Goose Lake	Imp
	27-0112	Mud	Sup
	27-0165	Jubert	IF
	27-0129	Dubay	IF
Crow River	27-0169	Cowley	Imp
	27-0171	Sylvan	Imp
	27-0177	Prairie	Sup
	27-0123	Laura	IF

Imp = impaired for impacts to aquatic recreation, Sup = fully supporting aquatic recreation,
IF = insufficient data to make an assessment

Two other water bodies – Rice Lake (West Basin) and French Lake-were at one time listed as impaired lakes on the state's 303(d) list. However, Rice Lake (West Basin) was removed from the draft 2012 list because it did not meet the definition of a lake based on hydraulic residence time, and French Lake was removed from the list because a review of its morphometric and other characteristics indicated it to be a wetland system rather than a shallow lake.

2.2 Water Quality Trends

Stream and lake data have been collected periodically by various entities throughout the Elm Creek Watershed. Intensive lake water quality monitoring was performed in recent years to support the TMDL analysis, but none of the periods of record for any of the lakes is considered sufficient to provide the

basis for reliable trend analysis. Similarly, flow and water quality monitoring at over a dozen sites was conducted to support the TMDL analysis for streams. However, the period of record at all but one of those sites extends only back as far as 2007 and therefore does not provide a sufficient data set for reliable trend analyses. The exception is the data available from the USGS site on lower Elm Creek, located below the junction with Rush Creek but above that with Diamond Creek. This station provides a 36-year period of record for continuous flow and a 27-year period of record for basic water quality data (including TP and TSS).

The flow-weighted mean concentration values during the runoff season (April through October) by year for TP and TSS at the USGS gaging station on Elm Creek are shown in Figure 2-2 and Figure 2-3. The period of record for TP concentration data is 1988 through 2014, while the period of record for TSS data at the site is 1991 through 2014. Non-parametric Mann Whitney U tests were run on each data set to detect significant trends in the data. The results indicate no significant trends in flow-weighted mean concentration values for TP concentration. However, total suspended solid concentrations from 2000 through 2014 were significantly lower (Significance= 0.041) compared to concentrations prior to 2000.

Figure 2-2. USGS flow weighted total phosphorus (TP) concentration estimated using FLUX analysis for April through October data from 1988 through 2014 in Elm Creek

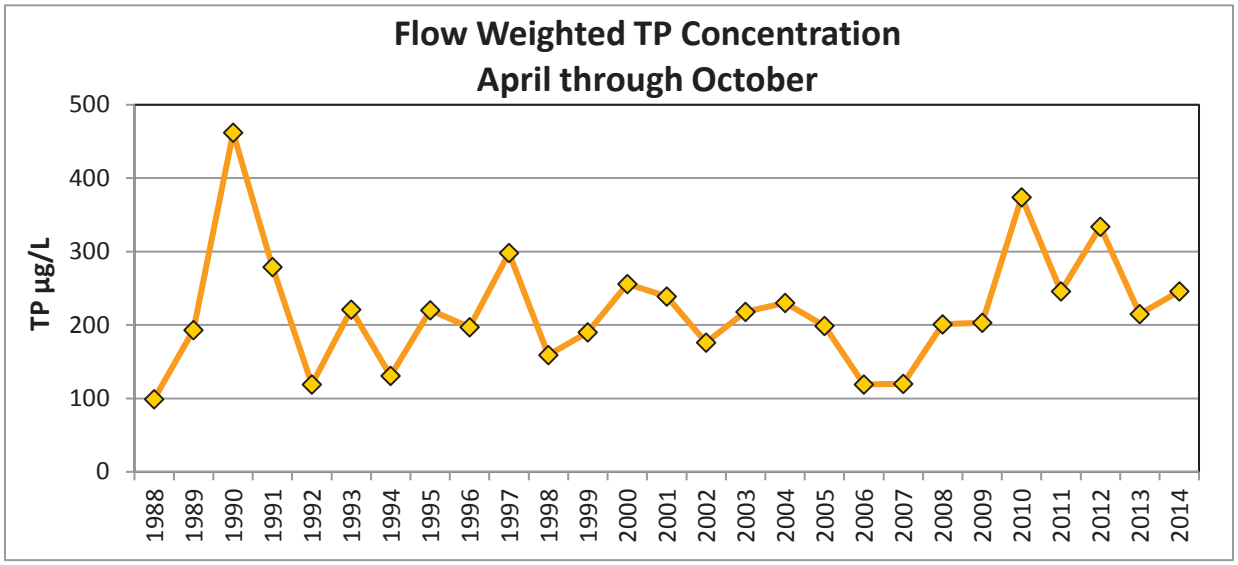

Figure 2-3. USGS flow weighted total suspended solid (TSS) concentration estimated using FLUX analysis for April through October data from 1991 through 2014 in Elm Creek

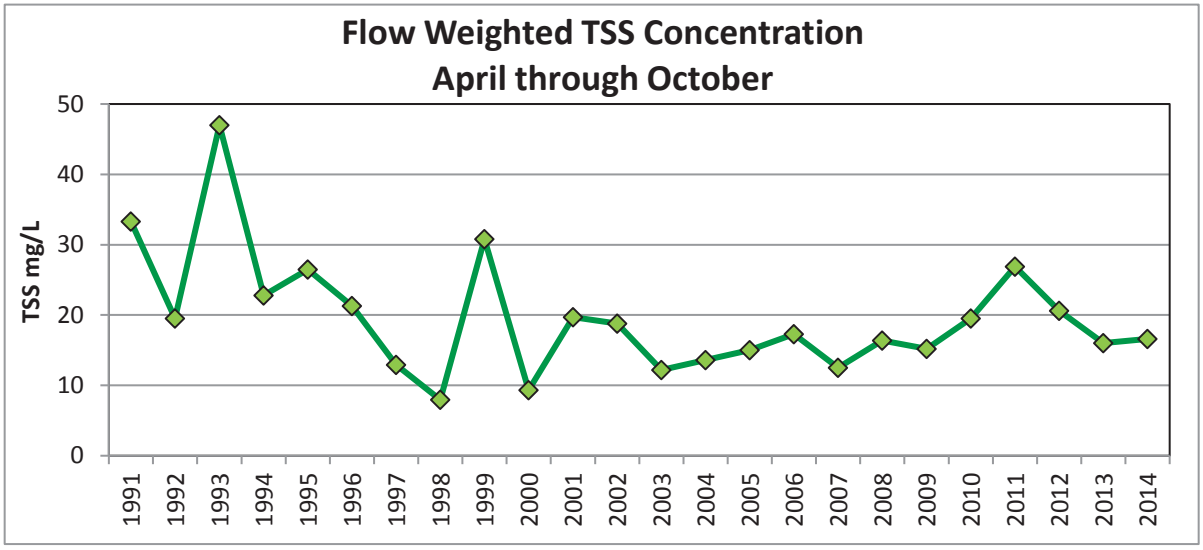

2.3 Stressors and Sources

In order to develop appropriate strategies for restoring or protecting waterbodies the stressors and/or sources impacting or threatening them must be identified and evaluated. Biological stressor identification (SID) is done for streams with either fish or macroinvertebrate biota impairments and encompasses both evaluation of pollutants and non-pollutant-related factors as potential stressors (e.g. altered hydrology, fish passage, habitat). Pollutant source assessments are done where a biological stressor ID process identifies a pollutant as a stressor as well as for the typical pollutant impairment listings. Section 3 provides further detail on stressors and pollutant sources.

Stressors of Biologically-Impaired Stream Reaches

There are five stream reaches in the Elm Creek Watershed impaired for aquatic life as reflected by the poor biological communities within each reach. In order to identify probable stressors causing these impairments, an intensive evaluation of existing data was conducted by the ECWMC. The resulting Elm Creek Watershed SID Report (Lehr 2015) provides the detailed information and weight of evidence to link stressors to the impairments. Potential candidate causes of the impairments that were ruled out based on a review of available data include: pH, water temperature, un-ionized ammonia, organic contaminants, excess nitrate, and heavy metals. Six probable stressors were identified, though the impact of these stressors varies by stream reach. They are: altered hydrology, altered physical habitat, excess sediment, excess phosphorus, low DO, and excess chloride. Table 2-3 summarizes the primary stressors for the Elm Creek Watershed impaired stream reaches identified in the Elm Creek Watershed SID Report.

Table 2-3. Primary stressors to aquatic life in biologically-impaired reaches in the Elm Creek Watershed

HUC-8 Subwatershed	AUID (Last 3)	Stream	Reach Description	Biological Impairment	Primary Stressor					
					Altered Hydrology	Altered Physical Habitat	Excess Sediment	Excess Phosphorus	Low DO	Excess Chlorides
7010206 Mississippi River Twin Cities	508	Elm Creek	Headwaters (Lk Medina 27-0146-00) to Mississippi River	Fish	o	o	o	o	•	/
				Macroinvertebrates	o	o	o	•	o	/
	525	Diamond Creek	Headwaters (French Lk 27-0127-00) to Un-named Lake	Fish	•	•	•	o	•	/
				Macroinvertebrates	o	o	o	•	o	/
	528	Rush Creek, Main Stem	Headwaters to Elm Creek	Fish	•	o	•	o	•	/
				Macroinvertebrates	•	o	•	•	o	/
	732	Rush Creek, South Fork	Un-named lake (27-0439-00) to Rush Creek	Fish	•	•	o	•	•	/
				Macroinvertebrates	•	•	o	•	o	/
	760	Rush Creek, South Fork	Un-named ditch to County Ditch 16	Fish	•	•	•	•	•	/
				Macroinvertebrates	o	•	o	o	•	/

• = Primary Stressor **o** = Secondary Stressor / = Inconclusive Stressor

A brief summary of each of the primary stressors identified in Table 2-3 is provided below:

Altered Hydrology. This stressor refers to changes in the volume and rate at which water is delivered to the stream channel and conveyed through the system. It also refers to the amount of flow delivered to the stream through groundwater seepage, which helps sustain baseflows in the stream when there is little or no runoff occurring. The Elm Creek system appears to be impacted to various degrees by agricultural and/or urban development and drainage systems, which deliver a higher volume of water more rapidly to the stream reaches creating more rapid and larger changes in flow. In addition, agricultural drainage practices and urban development often decrease the amount of precipitation percolating into the groundwater system, which often decreases the amount of groundwater discharge to the stream to sustain baseflows.

Altered Physical Habitat. Altered hydrologic inputs can also physically change the stream channel. This results in a more uniform cross-section and sediment type, reducing the diversity of stream structure and sediment types available to support a balanced biotic community.

Excess Sediment. Excess sediment, especially fine grained sediment, can fill the cover or void spaces between coarse sediment particles, gravel, etc. These types of habitat are especially valuable for certain types of macroinvertebrates, and can also be prime spawning habitat for some species of fish.

Excess Phosphorus. High phosphorus levels in streams often cause excessive growths of algae and

other plants. Because plants use oxygen at night when there is no sunlight, they can reduce the level of DO in the water to levels at which macroinvertebrates and fish are negatively affected. In addition, the periodic die-off of algae and other plants also generates organic material in the system that uses up oxygen when it decomposes.

Low DO. The DO is needed by virtually all macroinvertebrates and fish to survive. Further, macroinvertebrates and fish species typical of higher quality aquatic communities need higher concentrations of oxygen to survive than those of degraded communities.

Pollutant sources

Pollutant sources vary by subwatershed and by stream segment depending on permitted point source dischargers, upstream loading/conditions, near-reach land use and other nonpoint sources throughout the watershed. Potential pollutant sources in the impaired stream/lake watersheds were identified and discussed in the Elm Creek Watershed TMDL (ECWMC 2015) and are summarized in Table 2-4. There are currently nine regulated small Municipal Separate Storm Sewer System (MS4) General Permit holders (including the road authorities of Hennepin County and Minnesota Department of Transportation (MnDOT)) in the Elm Creek Watershed (Table 2-5). The Maple Hills Estate Wastewater Treatment Plant (WWTP) is currently the only active WWTP in the Elm Creek Watershed (Table 2-5).

Table 2-4. Nonpoint sources in the Elm Creek Watershed project area. Relative magnitudes of contributing sources are indicated

HUC-10 Sub-watershed	Stream/Reach (AUID) or Lake (ID)	Pollutant	Pollutant Sources										
			Agricultural runoff (from cropland, pasture and/or feedlots)	Livestock overgrazing in riparian	Failing septic systems	Wildlife	Runoff from urban stormwater (SW) and/or near-shore dev.	Wetlands	I Internal Loading (sediments and/or curly leaf pondweed)	Atmosphere	Point Sources (WWTPs)	Upstream lakes	Streambank/channel
Upper Mississippi River	Rush Creek, S. Fork. (upper) (-760)	TP	●	◉	○			?					
	Rush Creek, S. Fork. (lower) (-732)	Bacteria	●	◉	○	○							
		TP	●	◉	○	●	?	?					
		Chloride			?		●						
	Rush Creek Mainstem (-528)	Bacteria	●	◉	○	○							
		TP	●	◉	○			?					
	Diamond Creek (-525)	Bacteria	●	◉	○	○							
		TP	●	◉	○			?				◉	
		TSS	◉	◉									●
	Elm Creek (-508)	Bacteria	●	◉	○	○	◉						
		TP	●	◉	○		◉	?					
		TSS	◉	◉			◉						●
		Chloride			?		●						
	Fish Lake (27-0118)	TP					◉		●	○		○	
	Weaver Lake (27-0117)	TP					◉		◉	○			
	Henry Lake (27-0175)	TP	●		○				○	○			
	Rice Lake – Main (27-0116-01)	TP	◉				●		●	○		○	◉
	Goose Lake (27-0122)	TP					◉		●	○			
	Diamond Lake (27-0125)	TP	◉				●		◉	○			
	Mud Lake (27-0112)	TP					◉		◉	○		◉	
	Jubert Lake (27-0165)	TP	○	?	?				?	○			○
	Dubay Lake (27-0129)	TP	●						?	○			
	Cowley Lake (27-0169)	TP							●	○			
	Sylvan Lake (27-0171)	TP	●	◉	○				●	○			
	Prairie Lake (27-0177)	TP							○	○			
	Laura Lake (27-0123)	TP	●	?	○				?	○			

Key: ● = High ◉ = Moderate ○ = Low ? = present, but contribution to impairment unknown Blank = not a primary source

Table 2-5. Regulated MS4s and WWTPs in the Elm Creek Watershed project area

HUC-10 Sub-watershed	Point Source			Pollutant reduction needed beyond current permit conditions/limits?	Notes
	Name	Permit #	Type		
7010206- Upper Mississippi River	Maple Hills Estate	MN0031127	Municipal wastewater	Yes	Private wastewater treatment facility located in Corcoran
	City of Champlin	MS400008	Municipal SW	Yes	Allocations for reach 508 (*E. coli*, TSS, TP), Goose Lake (TP)
	City of Corcoran	MS400081	Municipal SW	Yes	Allocations for reach 732 (*E. coli*, TP), 760 (TP), 528 (*E. coli*, TP), 508 (*E. coli*, TSS, TP), Rice Lake (TP)
	City of Dayton	MS400083	Municipal SW	Yes	Allocations for reach 528 (*E. coli*, TP), 525 (*E. coli*, TSS, TP), 508 (*E. coli*, TSS, TP), Diamond Lake (TP), Goose Lake (TP)
	Hennepin County	MS400138	Municipal SW	Yes	Allocations for reach 732 (*E. coli*, TP), 528 (*E. coli*, TP), 508 (*E. coli*, TSS, TP), Rice Lake (TP), Diamond Lake (TP), Goose Lake (TP), Cowley Lake (TP)
	City of Maple Grove	MS400102	Municipal SW	Yes	Allocations for reach 732 (*E. coli*, TP), 528 (*E. coli*, TP), 508 (*E. coli*, TSS, TP), Rice Lake (TP)
	City of Medina	MS400105	Municipal SW	Yes	Allocations for reach 732 (*E. coli*, TP), 760 (TP), 508 (*E. coli*, TSS, TP), Rice Lake (TP)
	MnDOT	MS400170	Municipal SW	Yes	Allocations for reach 528 (*E. coli*, TP), 508 (*E. coli*, TSS, TP), Rice Lake (TP), Diamond Lake (TP)
	City of Plymouth	MS400112	Municipal SW	Yes	Allocations for reach 508 (*E. coli*, TSS, TP), Rice Lake (TP)
	City of Rogers	Future MS4	Municipal SW	Yes	Allocations for reach 528 (*E. coli*, TP), Diamond Lake (TP), Cowley Lake (TP), Sylvan Lake (TP)

2.4 TMDL Summary

There are seven impaired lakes and five impaired stream reaches that received allocations in the Elm Creek Watershed TMDL study. The TMDL allocations and pollutant load reductions from current conditions for each lake and stream reach are summarized in Table 2-6 and Table 2-7. Section 3 of this report discusses tools to identify and target the high priority pollutant loading areas and recommended restoration strategies to achieve the reductions required for these impaired lakes and/or stream reaches.

Table 2-6. Allocations summary for all lake TMDLs in the Elm Creek Watershed

Major Sub-watershed	Lake (ID)	Pollutant	Allocations (lbs/year)								Percent Reduction[1]
			Wasteload Allocation (WLA)			Load Allocation (LA)				MOS	
			WWTPs	Construction & Industrial SW	MS4s	Non-MS4 Watershed Load	Internal Load	Upstream Lakes	Atmosphere	Margin of Safety (MOS)	
Diamond Creek	Diamond Lake (27-0125)	TP	--	8	397	130	155	--	104	42	73%
Rush Creek	Henry Lake (27-0175)	TP	--	2	0	122	48	_	13	10	81%
Elm Creek	Fish Lake (27-0118)	TP	--	21	601	0	1267	--	64	103	19%
	Rice Lake (27-0116)	TP	--	23	1147	311	515	107	88	115	83%
	Goose Lake (27-0122)	TP	--	0.3	7.4	1	0	--	17	1	81%
North Fork Crow & Mississippi Direct	Sylvan Lake (27-0171)	TP	--	2	11	55	86	--	40	10	84%
	Cowley Lake (27-0169)	TP	--	1	57	24	0	--	9	5	89%

[1] Total percent reduction (all sources) from existing conditions needed to meet TMDL allocations

Table 2-7. Allocation summary for all stream TMDLs in the Elm Creek Watershed project area

Major Sub-watershed	Stream/Reach (AUID)	Pollutant	Flow Zone	*E. coli* allocations (billions org./day) TP & TSS Allocations (lbs/day)						Percent Reduction[1]
				WLA			LA		MOS	
				WWTPs	Construction & Industrial SW	MS4 Communities	Non-MS4 Watershed Load	Upstream Reach(es)	MOS	
Diamond	Diamond Creek (525)	*E. coli*	Very High	--	--	36.09	36.67	--	3.83	0%
			High	--	--	12.38	12.58	--	1.31	0%
			Mid	--	--	4.81	4.88	--	0.51	0%
			Low	--	--	1.75	1.78	--	0.19	23%
			Very Low	--	--	0.37	0.38	--	0.04	0%
		TP	Very High	--	0.20	5.92	3.26	3.35	0.67	64%
			High	--	0.07	2.02	1.12	1.15	0.23	71%
			Mid	--	0.03	0.79	0.43	0.45	0.09	65%
			Low	--	0.01	0.29	0.16	0.16	0.03	66%
			Very Low	--	0.00	0.07	0.03	0.03	0.01	81%
		TSS	Very High	--	60	2561	1199	--	201	0%
			High	--	21	879	411	--	69	30%
			Mid	--	8	341	160	--	27	0%
			Low	--	3	124	58	--	10	0%
			Very Low	--	0.6	27	12	--	2	68%
Rush	Rush Creek (528)	*E. coli*	Very High	0.14	--	164.74	269.25	--	22.85	66%
			High	0.14	--	47.52	77.68	--	6.60	40%
			Mid	0.14	--	12.72	20.56	--	1.75	59%
			Low	0.14	--	1.99	2.84	--	0.25	75%
			Very Low	**	--	0.03	**	--	0.0015	98%
		TP	Very High	0.25	1.20	29.23	44.03	1.27	4.00	77%
			High	0.25	0.35	8.37	12.61	0.37	1.15	71%
			Mid	0.25	0.09	2.15	3.24	0.10	0.31	67%
			Low	0.25	0.01	0.22	0.33	0.01	0.04	64%
			Very Low	**	**	**	**	**	0.0005	53%
South Fork Rush	South Fork Rush Creek (732)	*E. coli*	Very High	0.14	--	109.83	98.5	--	10.97	37%
			High	0.14	--	37.54	33.67	--	3.76	17%
			Mid	0.14	--	13.85	12.42	--	1.39	10%
			Low	0.14	--	4.69	4.2	--	0.47	36%
			Very Low	0.14	--	3.15	2.83	--	0.32	0%
		TP	Very High	0.25	0.57	16.44	19.22	--	1.92	61%
			High	0.25	0.20	5.55	6.49	--	0.66	77%
			Mid	0.25	0.07	1.98	2.32	--	0.24	81%
			Low	0.25	0.03	0.60	0.70	--	0.08	85%
			Very Low	0.25	0.03	0.36	0.43	--	0.06	66%
			Very High	--	0.29	3.41	14.50	--	0.96	61%

Major Sub-watershed	Stream/Reach (AUID)	Pollutant	Flow Zone	*E. coli* allocations (billions org./day) TP & TSS Allocations (lbs/day)						Percent Reduction[1]
				WLA			LA		MOS	
				WWTPs	Construction & Industrial SW	MS4 Communities	Non-MS4 Watershed Load	Upstream Reach(es)	MOS	
South Fork Rush	South Fork Rush Creek (760)	TP	High	--	0.10	1.17	4.97	--	0.33	77%
			Mid	--	0.03	0.42	1.82	--	0.12	81%
			Low	--	0.01	0.15	0.63	--	0.04	85%
			Very Low	--	0.01	0.09	0.42	--	0.03	66%
Elm	Elm Creek (508)	*E. coli*	Very High	0.14	--	305.15	71.47	--	19.83	19%
			High	0.14	--	95.33	22.33	--	6.20	0%
			Mid	0.14	--	26.10	6.11	--	1.70	8%
			Low	0.14	--	10.07	2.36	--	0.66	25%
			Very Low	0.14	--	4.61	1.08	--	0.31	0%
		TSS	Very High	--	453	9288	7279	11690	1511	49%
			High	--	174	4134	3240	3506	582	64%
			Mid	--	81	1691	1325	2004	268	59%
			Low	--	44	1347	1056	345	147	64%
			Very Low	--	29	995	780	45	97	48%
		TP	Very High	0.25	1.51	37.82	35.23	20.79	5.04	79%
			High	0.25	0.58	14.49	13.49	8.00	1.94	76%
			Mid	0.25	0.27	6.64	6.16	3.69	0.90	75%
			Low	0.25	0.15	3.60	3.31	2.02	0.49	81%
			Very Low	0.25	0.09	2.34	2.16	1.34	0.32	93%

[1] Total percent reduction (all sources) from existing conditions needed to meet TMDL allocations

** For *E. coli*, Allocation = flow contribution from a given source x 126 cfu *E. coli*/100 ml

For total phosphorus (TP), Allocation = flow contribution from a given source x 100 ug/l

2.5 Protection Considerations

Lakes

Of the 13 lakes included in this report, 7 were assessed by the MPCA and determined to be impaired. Of the six remaining lakes, two (Weaver Lake and Mud Lake, both in Maple Grove) were assessed by the MPCA and determined to be unimpaired, and four water bodies (Prairie Lake in Rogers, Jubert Lake in Corcoran, and Laura and Dubay Lakes in Dayton) have not yet been assessed. Figure 2-1 in Section 2 of this report shows the location of these six lakes. In addition, Appendix A presents key lake and watershed information for the six lakes, Appendix B summarizes the historical water quality data available for each lake, and Appendix C show the boundaries of the watershed for each lake. It should be mentioned that two other water bodies, Rice Lake–West Basin (Maple Grove) and French Lake (Dayton), were at one time listed as impaired on the state's list of impaired waters. However, Rice Lake-West Basin was removed from the list because it did not meet the definition of a lake based on hydraulic residence time, and French Lake, though an important influence on the quality of the headwaters of Diamond Creek, was removed from the list because a review of its morphology and other characteristics indicated it to be a wetland system.

In Table 2-8, the key lake and watershed characteristics and protection elements are summarized for Weaver and Mud lakes. Specific protection strategies for these lakes are described in the restoration and protection strategies tables presented in Section 3.3.

As mentioned previously in this section, there are four water bodies (Prairie Lake, Jubert Lake, Laura Lake and Dubay Lake) for which limited information is available but have not yet been assessed for impairment by the MPCA. A summary of what is known about these water bodies and recommendations for their future assessment are outlined in Table 2-9 below. Specific management and protection strategies for these lakes are listed in the restoration and protection strategies tables in Section 3.3.

There are a number of lakes about which little or nothing is known. A partial list of some of these water bodies is included below, including the units of government within which these water bodies are located:

- Scott Lake (city of Corcoran)
- Lehmans Lake (city of Champlin/Elm Creek Park Reserve)
- Hayden Lake (city of Dayton/Elm Creek Park Reserve)
- Meadow Lake (city of Rogers)
- Grass Lake (cities of Dayton and Rogers)

It appears that many of these water bodies are wetlands and/or rapid flow through systems on major streams. None have credible bathymetry or in-basin water quality data, both of which are essential to support the assessment and analysis of those systems. As a starting point, this data should be collected as opportunities and funding priorities allow.

Table 2-8. Key Lake/Watershed Characteristics and Protection Elements for "Protect" Lakes

WID	Location	Lake Size (acres)	Max. depth (ft)	Classification	Drainage area (acres)/dominant land use	Water Quality Standards Met			General notes	Key Protection Elements
						TP (year)	Chl-a (year)	Clarity (year)		
Weaver Lake	City of Maple Grove	152	57	Deep lake	200/suburban	2005-2013	2005-2012	2005-2013	Mostly meets state water quality standards	Reduce in lake loading (curly leaf pondweed and/or sediment release) as necessary Improve urban SW management Conduct monitoring and public outreach More details in Table 3-5
Mud Lake	City of Maple Grove	79	7	Shallow lake	1,353/park and suburban	2011-2012	2011-2012	2011-2012	22% of watershed drains through Goose Lake	Improve water quality for Goose Lake Improve urban SW management More details in Table 3-5

Year = Water quality did not meet state standard

Table 2-9. Summary of Lake/Watershed Characteristics and Recommendations for Non-assessed Lakes

WID	Location	Lake Size (acres)	Max. depth (ft)	Classification	Drainage area (acres)/dominant land use	Water Quality Standards Met			General notes	Key Protection Elements
						TP (year)	Chl-a (year)	Clarity (year)		
Lake Dubay	City of Dayton	15	**7**	No bathymetry; likely shallow lake	About 40/ agriculture	2012-2013	2012-2013	2012-2013	No public access to lake	Improve urban SW management Monitor More details in Table 3-3
Laura Lake	City of Dayton	35	**Unknown**	No bathymetry; likely shallow lake	140/ agriculture	2013	2013	2013	No public access to lake	Improve urban SW management Monitor More details in Table 3-6
Jubert Lake	City of Corcoran	64	**41**	Deep lake	1,900/ agriculture	2000	2000	2000	No public access to lake; located at head waters of South Fork Rush Creek	Reduce in lake loading Improve urban SW management Monitor and public outreach More details in Table 3-4
Prairie Lake	City of Rogers	32	**8**	Shallow lake	150/Native prairie	2003, 2011, 2012	2003, 2011, 2012	2003, 2011, 2012	Exceptional water quality	Minimally impacted reference system Permanently protected; Located within Three Rivers Park District Crow Hassan PR More details in Table 3-6

Year=Water quality did not meet state standard

Watershed-wide

All waters currently supporting aquatic life and recreation in the watershed are also considered waters to protect. Working to protect surface and groundwater resources currently supporting beneficial uses through the implementation of best management practices (BMPs) is vital to the overall health of the Elm Creek Watershed and state of Minnesota.

Significant threats to water resources include:

- Declines in surficial groundwater threaten shallow water ecosystems such as wetlands, lakes, and streams. These ecosystems are vitally important to the watershed, the biological communities that rely on their existence, and for recreation.
- Climate change (or climate instability) poses a complex challenge to current water resource management practices. Recent climatological events such as drought, intense localized precipitation, and flooding have all been observed across the watershed. These changes can increase water quality degradation, flooding, and drought duration.
- Aquatic invasive species (AIS) continue to threaten both the biodiversity and overall ecological health of high value resources within the watershed. The number of infested waterbodies continues to climb across the state of Minnesota.
- Rural and agricultural land uses can have a significant negative impact on flow regimes and water quality if those lands are not well-managed. Management/disposal of manure from livestock operations, improperly managed cropland drainage and inefficient fertilization practices, sediment loss from croplands, and on-site treatment of human waste cause water quality degradation and/or compromise the hydrologic integrity of streams and rivers where proper management practices are not in place.
- Conversion of agricultural and vacant lands to more urbanized use (i.e., single family residential, multi-family residential, etc.) is anticipated to continue in the Elm Creek Watershed for the foreseeable future. Land use conversions such as these will increase the amount of impervious area, reduce infiltration, and potentially exacerbate threats previously mentioned such as declines in surficial groundwater unless proper southwest mitigation practices are used.
- Water quality degradation resulting from sediment, phosphorus, and bacteria introduction to surface waters of the Elm Creek Watershed is another significant threat. With increasing urbanization, these threats could increase in the future along with other potential contaminants such as chloride, heavy metals, etc.
- Groundwater contamination poses a serious threat to some surficial aquifers of the Elm Creek Watershed, especially in the lower portion of the watershed. These groundwater aquifers are susceptible to pollution as a result of their shallow depth and sandy soils that allow water to move quickly through them.

Priority A Source Protection Area

In 1974, the Federal Safe Drinking Water Act was established to protect the quality of drinking water in the U.S. In 1996, in accordance with amendments to the act, the Minnesota Department of Health determined Source Water Assessments and assigned areas of Priority A and B. About 31% of the Elm Creek Watershed lay within the Priority A designation with the remainder in the Priority B designation

(Figure 2-4)**.** A designation of Priority A is used for waters that present an immediate health concern if the waters were to become contaminated while a designation of Priority B is to protect water users from chronic health effects related to low levels of chemical contamination. More information on the Protection of Source Waters can be found at the Minnesota Department of Health Source Water Protection website. While the development of a Source Water Protection Plan is voluntary, developing a plan would help protect source water from contamination.

Figure 2-4. Source water protection areas for Minneapolis and St. Paul for the Elm Creek Watershed

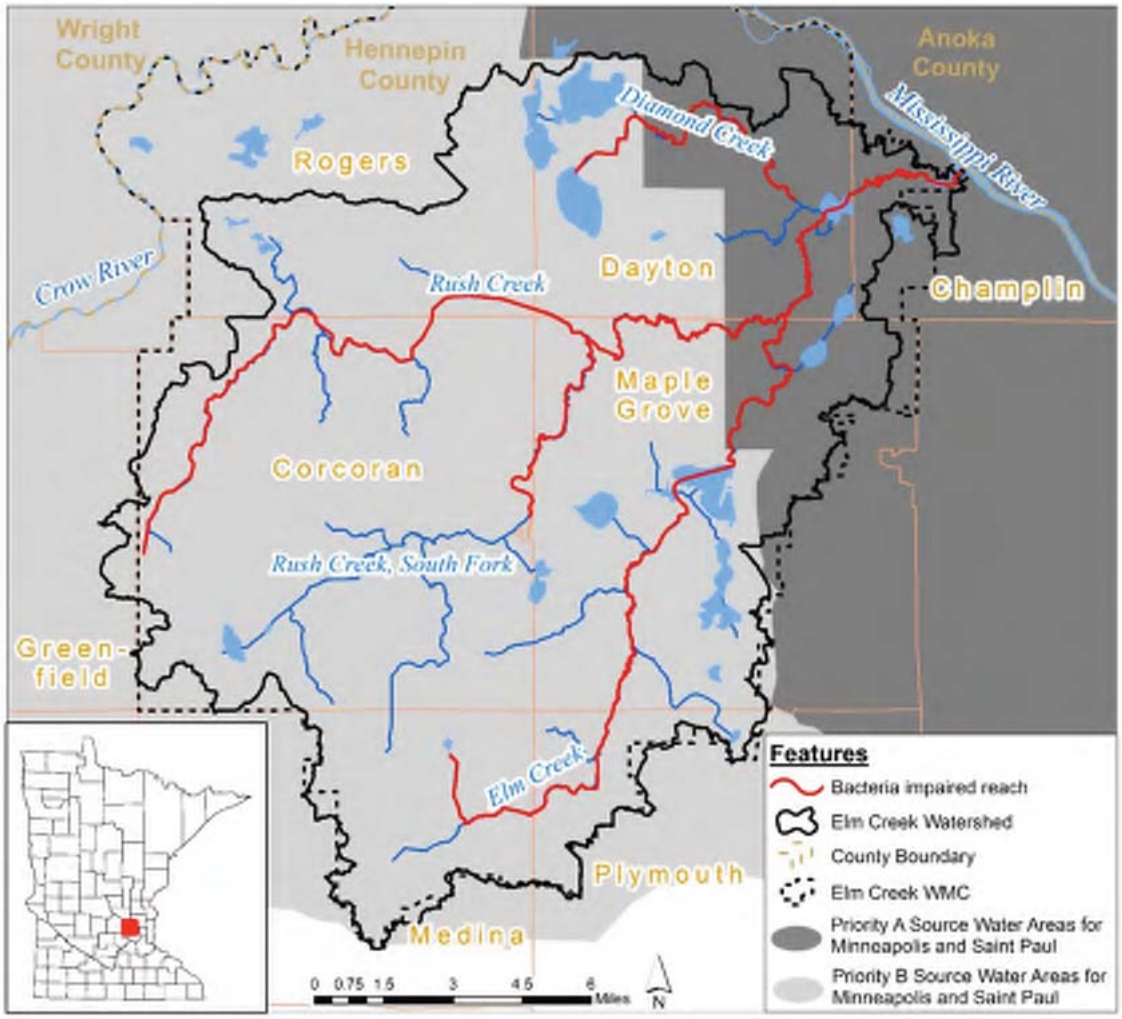

3. Prioritizing and Implementing Restoration and Protection

The Clean Water Legacy Act (CWLA) requires that WRAPS reports summarize critical areas for targeting actions to improve water quality, identify point sources, and identify nonpoint sources of pollution with sufficient specificity to prioritize and geographically locate watershed restoration and protection actions. In addition, the CWLA requires including an implementation table of strategies and actions that are capable of cumulatively achieving needed pollution load reductions for point and nonpoint sources.

This section of the report provides the results of such strategy development and prioritization. Because much of the nonpoint source strategies outlined in this section rely on voluntary implementation by landowners, land users and residents of the watershed it is imperative to create social capital (trust, networks, and positive relationships) with those who will be needed to voluntarily implement BMPs. Thus, effective ongoing civic engagement is fully a part of the overall plan for moving forward.

There are issues that are not addressed in the strategies tables, such as limited local capacity, funding, and landowner cooperation that can greatly affect the outcomes of this report. If staff and funding resources are limited or nonexistent in the project area, and/or landowner cooperation cannot be secured to implement improvements, it is likely that the strategies and goals laid out in this report will take longer to achieve, or may not be achieved at all. Much of this work relies on reductions from non-regulated actions in the watershed, and in order to achieve those goals local relationships and trust need to be built where they may not currently exist. Therefore, it is important that as these actions are undertaken, all levels (federal, state, and local governments; non-profits; and landowners) continue to find ways to support local entities and individuals to ensure the waterbodies in the Elm Creek Watershed are restored and protected. If this support does not happen, achieving the TMDL reductions and strategies in this report are very unlikely.

3.1 Targeting of Geographic Areas

Targeting has been used at several scales to help identify critical areas in the Elm Creek Watershed project area. The following discussion begins at the state and basin scale and moves to smaller more focused areas based on the specific tools used for this project.

State, Basin and Regional Scale

The Minnesota Nutrient Reduction Strategy was developed in response to concern about excessive nutrient levels that pose a substantial threat to Minnesota's lakes and rivers, as well as downstream waters including the Great Lakes, Lake Winnipeg, the Mississippi River, and the Gulf of Mexico. In recent decades, nutrient issues downstream of Minnesota have reached critical levels, including the effect of nutrients in the Gulf of Mexico which resulted in a dead zone, eutrophication issues in Lake Winnipeg, and algal blooms in the Great Lakes. Several state-level initiatives and actions highlighted the need for a statewide strategy that ties separate but related activities together to further progress in making nutrient reductions. Minnesota conducted both nitrogen and phosphorus assessments to identify nutrient source contributions. The main nutrient sources to the Mississippi River are phosphorus from agricultural cropland runoff, wastewater, and streambank erosion, and nitrogen from agricultural tile drainage and water leaving cropland via groundwater. The associated Phase I milestones for the Mississippi River Basin N and P are 20% and 35% reduction from baseline by 2025 respectively.

Additional milestones call for 30% (N) and 45% (P) by 2035 and 45% reduction from baseline in N by 2045. The primary tools the State will use to achieve these reductions are the 10-year cycle of watershed assessments and WRAPS studies to identify high-loading areas and critical management areas; enhanced phosphorus and nitrogen reduction strategies for wastewater effluent; facilitating implementation of agricultural BMPs targeted at increasing fertilizer use efficiency, reducing field erosion, and treating tile drainage water; and continued implementation of the SW discharge permitting system for MS4s.

The Nitrogen in Minnesota Surface Waters Strategy was developed in response to a concern for human health when elevated nitrogen levels reach drinking water supplies. The 10 mg/l nitrate-N drinking water standard established for surface and groundwater drinking water sources and for cold water streams is exceeded in numerous wells and streams. The purpose of this study was to provide an assessment of the science concerning N in Minnesota waters so that the results could be used for current and future planning efforts, thereby resulting in meaningful goals, priorities, and solutions.

More specifically, the purpose of this project was to characterize N loading to Minnesota's surface waters, and assess conditions, trends, sources, pathways, and potential BMPs to achieve nitrogen reductions in our waters. The nitrogen study contains a spreadsheet tool called the nitrogen best management practice (NBMP) tool (NBMP is described in more detail in the Nitrogen in Minnesota Surface Waters Report Chapter F1 (Wall 2013)).

The Twin Cities Metropolitan Area Chloride Management Plan (CMP) was developed to address the increasing concentrations of chloride found in Minnesota's waters in urban areas as well as across the state. The CMP provides the framework to assist local communities in reducing chloride concentrations in both the state's ground and surface waters through protection and restoration efforts. The CMP contains a variety of BMPs that reduce salt use while still maintaining safe conditions for the public. The chloride reduction strategy outlined in the plan uses a performance-based approach that does not have specific numerical requirements but focuses on implementing BMPs and tracking trends in chloride concentrations. The primary recommended strategies for reducing chloride concentrations in the CMP include: 1) a shift to using more liquid deicing chemical products rather the granular ones, 2) improved physical snow and ice removal, 3) use of practices that prevent the formation of a bond between snow/ice and the pavement, 4) strategies that eliminate salt waste, 5) training for winter maintenance professionals, and 6) education for the public and elected officials.

Elm Creek Watershed

Various reports, datasets and GIS tools were developed through the Elm Creek Watershed assessment process and the TMDL studies that can be used to identify degraded waterbodies and potential areas to implement restoration and protection strategies. A summary of these resources is presented in Table 3-1. These resources were developed by various groups and agencies including BSWR, the University of Minnesota Duluth (UMD), Minnesota Department of Natural Resources (DNR), Three Rivers Park District, and several other agencies. More detailed information on each effort/tool can be obtained from the sources cited in Table 3-1. It is important to point out that these tools were developed using a wide range of input datasets with different restoration and protection initiatives in mind, ranging from stream shading to sediment and nutrient loading.

A suite of modeling tools was used to support the TMDL development. The Soil and Water Assessment Tool (SWAT) model was chosen as one of the modeling tools to simulate watershed hydrology and water quality to in the Elm Creek Watershed. The SWAT modeling effort relied on use of light detection and ranging (LiDAR) information to provide subwatershed delineation input information for the model as well as algorithms for the Revised Universal Soil Loss Equation (RUSLE) to estimate landscape soil erosion load (SWAT, RUSLE, and LiDAR are all briefly described in in Table 3-1. The intended use of the SWAT model was primarily to quantify landscape contributions of water, sediment and nutrients in the Elm Creek Watershed where needed. Landscape loads from the SWAT model were then used as an input to other modeling tools (e.g., BATHTUB) to support the simulation of receiving water responses in the Elm Creek Watershed. The SWAT modeling was also used to help identify subwatersheds that had a higher potential for exporting nutrients and sediment to the downstream resources (Figure 3-1). The Commission intends to focus its initial implementation efforts in those areas.

Finally, the Environmental Benefit Index (EBI) tool was applied to the Elm Creek Watershed by staff from the MPCA. The tool is briefly described in in Table 3-1, and Figure 7 shows an example of the output available from the EBI analysis for the Diamond Creek Subwatershed.

Recently, the Minnesota DNR has recently completed development of the Watershed Health Assessment Framework (WHAF), which provides a comprehensive overview of the ecological health of Minnesota's watersheds. The WHAF is based on a "whole-system" approach that explores how all parts of the system work together to provide a healthy watershed. The WHAF divides the watershed's ecological processes into five components: biology, connectivity, geomorphology, and hydrology and water quality. A suite of watershed health index scores have been calculated that represent many of the ecological relationships within and between the five components. These scores have been built into a statewide GIS database that is compared across Minnesota to provide a baseline health condition report for each of the 80 major watersheds in the state. The DNR has applied the condition report to larger (HUC-8) watersheds, and more recently has applied the framework at smaller (HUC-12) subwatershed levels. The WHAF may be a helpful resource in monitoring and assessing the health of the watershed as restoration and protection practices are implemented.

Figure 3-1. Potential TP loading and loading rate by subwatershed (delineated with LiDAR) as modeled for the TMDLs using SWAT

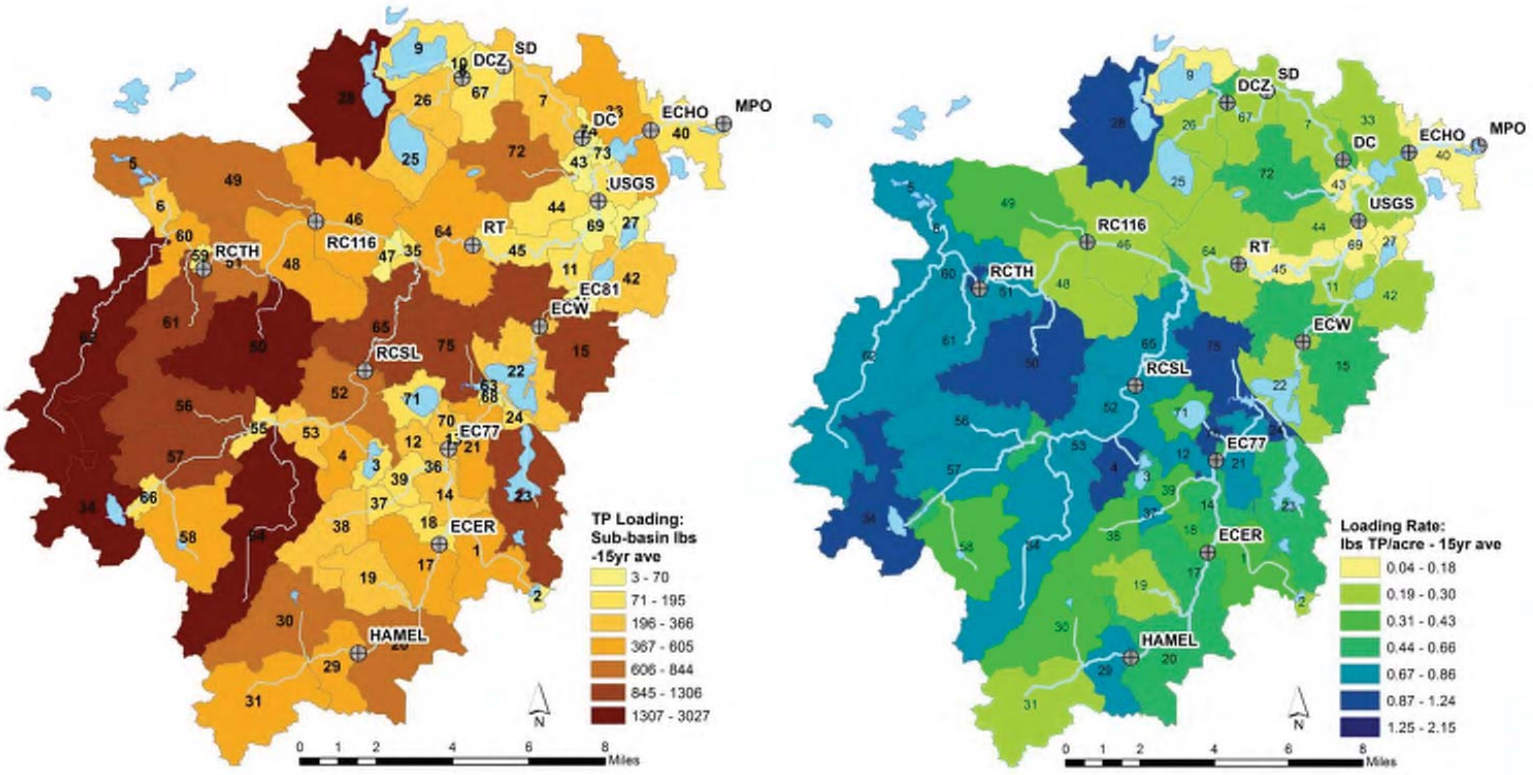

Table 3-1. Prioritization tools

Tool	Description	How can the tool be used?	Notes	Link to Information and data
Elm Creek SWAT Model	Computer model of watershed processes to show where pollutants originate and which mitigation strategies are most effective	The Elm Creek SWAT model is able to display the phosphorus, sediment and other pollutant export throughout the watershed. The Elm Creek SWAT model was calibrated to observed (monitored) data and can be used to identify pollutant loading hot spots and help determine scenarios for pollution reduction on a subwatershed scale.	The Elm Creek SWAT model was developed for the Elm Creek Watershed TMDL study.	Contact the Three Rivers Park District for SWAT model files and output
Ecological Ranking Tool (EBI)	Three GIS layers containing: soil erosion risk, water quality risk, and habitat quality. Locations on each layer are assigned a score from 0-100. The sum of all three layer scores (max of 300) is the EBI score. This higher the score, the higher the value in applying restoration or protection.	Any one of the three layers can be used separately or the sum of the layers (EBI) can be used to identify areas that are in line with local priorities. Raster calculator allows a user to make their own sum of the layers to better reflect local values. (Figure 3-2)	GIS layers are available on the Board of Water and Soil Resources (BWSR) website.	BWSR
Zonation	A framework and software for large-scale spatial conservation prioritization; it is a decision support tool for conservation planning. This values-based model can be used to identify areas important for protection and restoration.	Zonation produces a hierarchical prioritization of the landscape based on the occurrence levels of features in sites (grid cells). It iteratively removes the least valuable remaining cell, accounting for connectivity and generalized complementarity in the process. The output of Zonation can be imported into GIS software for further analysis. Zonation can be run on very large data sets (with up to ~50 million grid cells).	The software allows balancing of alternative land uses, landscape condition and retention, and feature-specific connectivity responses. (Paul Radomski, DNR, has expertise with this tool.)	CBIG
Restorable Wetland Prioritization Tool	A GIS-based tool developed by the UMD and other agencies that uses readily available GIS data consisting of 5 primary layers. The final product is a map showing potential locations for wetland restorations throughout the watershed.	This tool may be used to help identify and prioritize potential wetland restoration areas based on soil type and existing land use.	Hennepin County's Natural Resources Interactive Map also contains "potential" and "probable" wetland locations using similar methods	UMD Hennepin County

Tool	Description	How can the tool be used?	Notes	Link to Information and data
Revised Universal Soil Loss Equation (RUSLE) and Soil Erosion Risk Tool	RUSLE predicts the long term average annual rate of erosion on a field slope based on rainfall pattern, soil type, topography, land use and management practices. A soil erosion risk (similar to RUSLE) tool is available through the Ecological Ranking Tool (EBI) website and uses a subset of RUSLE to determine relative soil erosion risk values on a 0-100 point scale.	The RUSLE model provides an assessment of existing soil loss from upland sources and the potential to assess sediment loading through the application of BMPs. The Soil Erosion Risk Tool provides users with a general sense of the highest potential areas of soil loss in a given watershed/subwatershed.	RUSLE results present maximum amount of soil loss that could be expected under existing conditions and do not represent sediment transport and loading to receiving waters.	RUSLE Soil Erosion Risk Tool
Light Detection and Ranging (LiDAR)	Elevation data in a digital elevation model (DEM) GIS layer. Created from remote sensing technology that uses laser light to detect and measure surface features on the earth.	General mapping and analysis of elevation/terrain. These data have been used for: erosion analysis, water storage and flow analysis, siting and design of BMPs, wetland mapping, and flood control mapping. A specific application of the data set is to delineate small catchments.	The layers are available on the MN Geospatial Information website for most counties.	MGIO

Figure 3-2. The top 5% EBI areas (purple) for the Elm Creek Watershed. A zoomed in portion of the watershed is shown for the Diamond Creek Watershed with an insert of the overview map

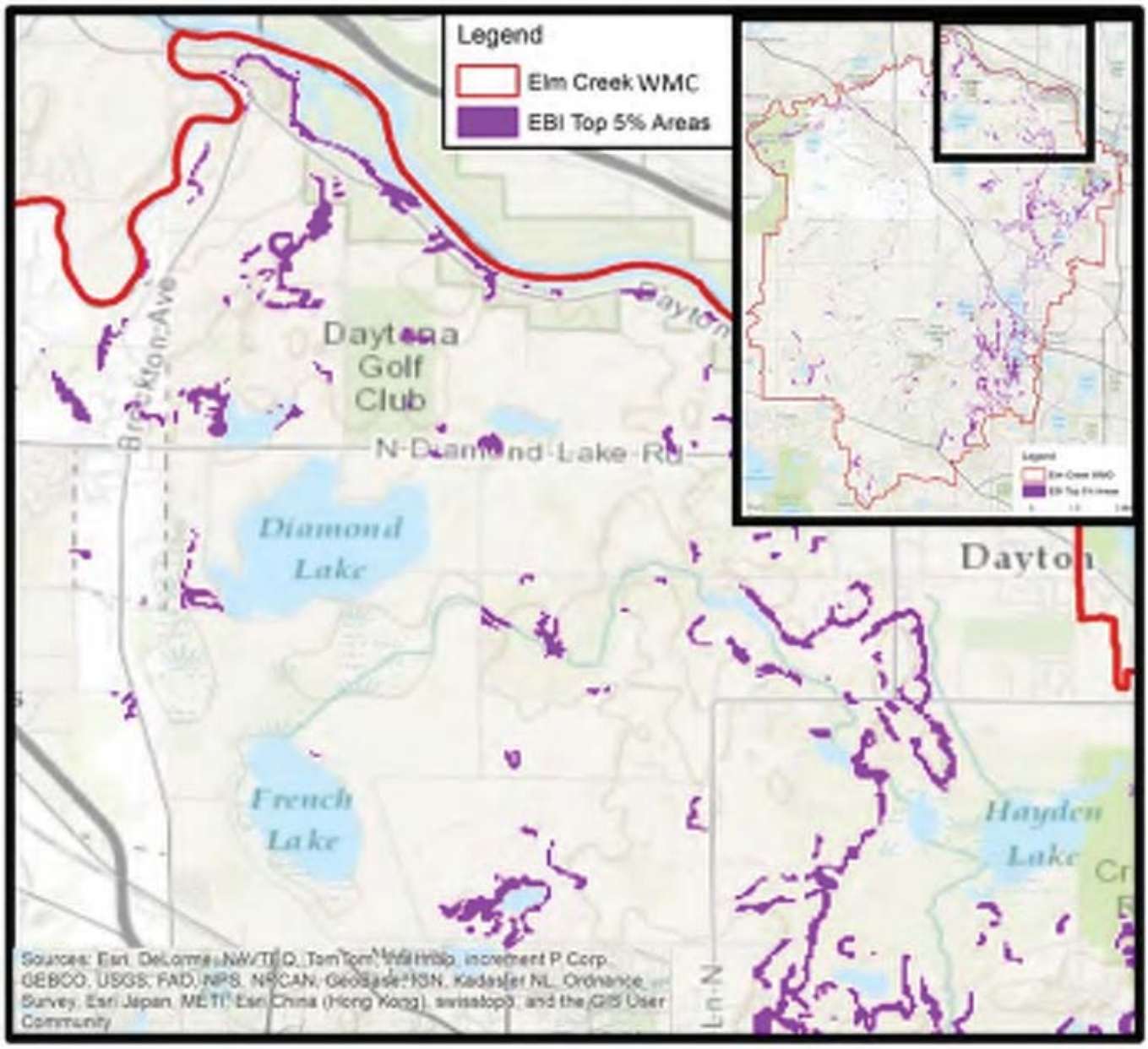

3.2 Civic Engagement

A key prerequisite for successful strategy development and on-the-ground implementation is meaningful civic engagement. This is distinguished from the broader term 'public participation' in that civic engagement encompasses a higher, more interactive level of involvement. Specifically, the University of Minnesota (UMN) Extension's definition of civic engagement is "Making 'resourceFULL' decisions and taking collective action on public issues through processes that involve public discussion, reflection, and collaboration." A resourceFULL decision is one based on diverse sources of information and supported with buy-in, resources (including human), and competence. Further information on civic engagement is available at: www1.extension.umn.edu/community/civic-engagement/.

Accomplishments and Future Plans

A stakeholder participation process was undertaken to obtain input from, review results with, and take comments from the public and interested/affected agencies and local jurisdictions regarding the development and conclusions of the project. The following cities/agencies/interested parties were invited to project meetings and/or received communications regarding the project:

City of Champlin	Hennepin County
City of Corcoran	BWSR
City of Dayton	Met Council Environmental Services
City of Medina	DNR
City of Maple Grove	MnDOT
City of Plymouth	Rice Lake Area Association
City of Rogers	Fish Lake Area Residents Association
Maple Hills Estates	Diamond Lake Association

A Technical Advisory Committee (TAC) comprised of representatives from the cities and agencies listed above was at the core of the public participation process. This group met 14 times between 2011 and December 2014 to review and provide feedback on the technical aspects of the project, including the modeling and technical analysis results, allocation methodologies, and implementation elements. Summaries of each meeting were prepared and distributed to the ECWMC and all participants, as well as posted on the Commission's web site. All Power Point presentations given at the meetings were posted on the Commission's web site.

Project staff also met separately with a number of organizations to explain the purpose of the project, as well as present and discuss project findings, recommendation, and implications. These groups included:

City of Maple Grove Lakes Commission
Rice Lake Area Associations (annual meetings)
Fish Lake Area Residents Associations (annual meetings)
City officials from Dayton and residents around Diamond Lake
City of Champlin Environmental Resources Commission
City of Plymouth Environmental Quality Committee

Finally, a Knowledge, Attitudes, and Practices (KAP) survey was conducted which focused on three agricultural audiences (crop farmers, livestock operators, and horse owners), since the Commission knew relatively little about these stakeholder groups. The methods and results are summarized in the Elm Creek Watershed Management Commission TMDL Appendix G (Eckman 2013).

As part of its 3rd Generation Watershed Management Plan, adopted in 2015, for the period 2015 through 2025, the ECWMC has laid out an expanded education and outreach effort. The over-arching goal for this effort is "to educate and engage everyone in the watershed by increasing awareness of water resources, and to create and support advocates willing to protect and preserve the resources in the watershed." Specific priorities include:

- Collaborating with groups such as the West Metro Water Alliance and Blue Thumb to pool education resources to undertake activities in a cost-effective manner and promote consistency in messaging.
- Use the Commission's, member cities', and educational partners' websites and newsletters, social media, co-ops, local newspapers, and cable TV to share useful information with stakeholders on ways to improve water quality.
- Provide opportunities for the public to learn about and participate in water quality activities.
- Provide education opportunities for elected and appointed officials and other decision makers.
- Enhance education opportunities for youth

Specific critical areas for the period 2015 through 2017 for education and outreach, organized by stakeholder group, include:

- All stakeholders: Use multiple strategies to deliver simple messages such as "where does our runoff go" and "why are we focused on water quality protection/improvement?"
- Homeowners: Disseminate education materials to all stakeholders about actions they can take to protect and improve water quality, including;
    - Re-directing runoff onto pervious surfaces
    - Cleaning up after pets
    - Keeping organic matter (leaves, grass clippings, seeds, etc.) out of streets, ditches, and storm sewers
    - Lakeshore property owners: Sponsor workshops on the basics of limnology, learning about AIS, and how to undertake lakescaping
    - Elected officials and city staff: Sponsor watershed and water resources training activities such as NEMO (Nonpoint Education for Municipal Officials) for the city councils and planning commissions in the member cities

- Students: Expand the Watershed Protection, Restoration, Education, and Prevention (PREP) fourth-grade program to all elementary schools in the watershed, and begin developing a companion program for older students
- Agricultural producers and hobbyists: Identify and work with influential persons to spread water quality and BMP messages. Undertake a demonstration project with a co-op

The Commission intends to budget between $20,000 and $25,000 over the next five years to support these and other education and civic engagement initiatives.

Public Notice for Comments

An opportunity for public comment on the draft WRAPS report was provided via a public notice from July 5, 2016, through August 4, 2016.

3.3 Restoration & Protection Strategies

Specific strategies have been developed and are currently being developed to restore the impaired waters within the Elm Creek Watershed and for protecting waters within the watershed that are not impaired. The subwatershed-based implementation strategy tables that follow (Table 3-2 to Table 3-7) outline the strategies and actions that are capable of cumulatively achieving the needed pollution load reductions for point and non-point sources, as well as watershed and in-stream improvements to decrease stressors on biological communities throughout the watershed. The tables were developed by reviewing the specific conditions affecting each of the waters and collecting input from the TMDL report and watershed stakeholders. Some of the practices in the restoration and protection strategies tables may be credited as progress toward achieving TMDL wasteload allocations (WLAs). The MS4s and other permitted entities may contact the MPCA to discuss which practices may be credited.

Subwatershed Assessments. The watershed modeling and monitoring completed for the TMDL identified subwatersheds where nutrient and sediment loading potentially occurs at higher rates than average. The Commission will undertake more detailed and systematic subwatershed assessments and modeling to focus load reduction efforts in those high-loading areas where actions such as retrofitting existing ponds with iron-enhanced filter benches, mitigating stream erosion, enhancing stream buffers, improving individual site manure management, or adding new bioinfiltration basins are likely to be most cost-effective.

The subwatershed assessments will identify non-point source problem areas and potential upland BMP projects throughout the various subwatersheds. The in-channel walking surveys/assessments will identify areas of streambank erosion and evaluate riparian vegetation and habitat conditions. Below is a list of the types of urban, rural, and in-channel BMP projects these assessments and surveys will help apply appropriately:

- Bioretention/infiltration basins and tree-trenches
- Pervious pavement
- Hydrodynamic separators and SAFL Baffles
- Residential raingardens

- Iron enhanced sand filters
- Other SW pond retrofits and maintenance
- Conservation and reduced tillage BMPs in sensitive cropland areas
- Water and sediment control basins
- Grassed waterways
- Agricultural nutrient management
- Contour farming
- Stream and edge of field buffers
- Managed livestock access control areas near streams
- Manure storage/manure management plan development and implementation
- Alternative watering sources for livestock
- Pastureland runoff controls/buffers
- Lakeshore restorations
- Tree thinning (in-channel)
- Bank stabilization/restoration
- Re-meandering (in-channel)
- Low-flow channel construction
- Substrate installation (in-channel)
- Fine sediment removal (in-channel)

The Commission will periodically convene an agricultural TAC comprised of federal, state, and local specialists from UMN Extension, Minnesota Department of Agriculture (MDA), BWSR, Hennepin County, and other interested parties to craft partnerships in specialized education and other programs and BMPs such as targeted fertilizer application, erosion and sediment control, and manure management. This TAC will also advise the Commission as it completes subwatershed assessments in the agricultural parts of the watershed. The TAC will help identify appropriate implementation actions, and focus their technical expertise and resources on high-loading locations in subwatersheds of focus.

Regulation. The Elm Creek Watershed is in land use transition (Figure 3-3). It is expected that much of the area now in agricultural uses will over the next 10 to 30 years be converted to suburban and large-lot development. The Commission has enacted more stringent rules and standards for managing runoff rates and volumes and requiring nutrient and sediment load reductions. Developers and redevelopers are now required to infiltrate or abstract 1.1” of runoff from new impervious surface. Where infiltration is not feasible, the new rules require that runoff be filtered before discharge from the site. The rules also establish a performance standard for SW quality to achieve a loading reduction as good as or better than that which would be achieved by abstracting 1.1” of runoff depth from new impervious surfaces, or no-net increase in TP or TSS, whichever is lower.

Figure 3-3. Met Council percent of land use for 2010 and 2030 for the Elm Creek, Sylvan and Cowley Watersheds

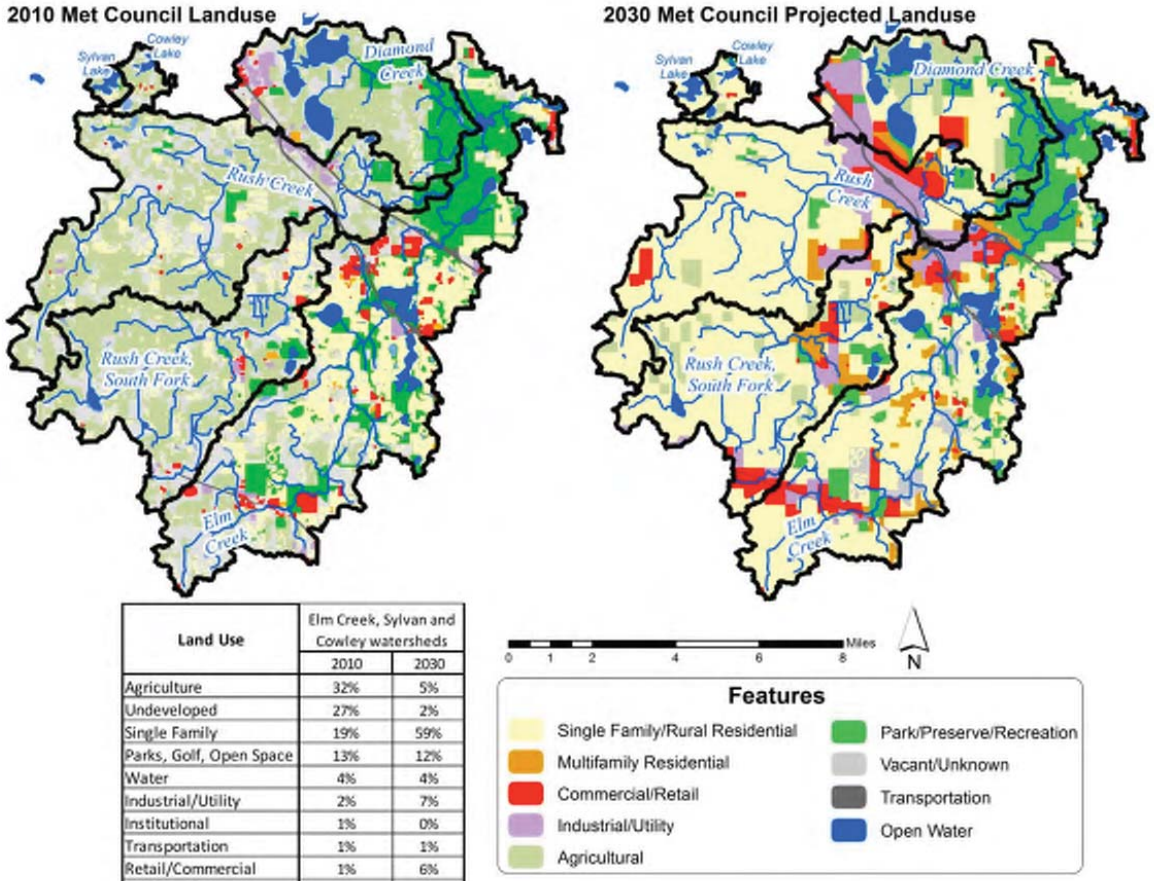

Land Use	Elm Creek, Sylvan and Cowley watersheds	
	2010	2030
Agriculture	32%	5%
Undeveloped	27%	2%
Single Family	19%	59%
Parks, Golf, Open Space	13%	12%
Water	4%	4%
Industrial/Utility	2%	7%
Institutional	1%	0%
Transportation	1%	1%
Retail/Commercial	1%	6%
Multifamily	0%	5%

Funding Opportunities

There are a variety of funding sources to help cover some of the cost to implement practices that reduce pollutants from entering our surface waters and groundwater. There are several programs listed below that contain web links to the programs and contacts for each entity. The contacts for each grant program can assist in the determination of eligibility for each program as well as funding requirements and amounts available.

On November 4, 2008, Minnesota voters approved the Clean Water, Land & Legacy Amendment to the constitution to:

- *protect drinking water sources;*
- *protect, enhance, and restore wetlands, prairies, forests, and fish, game, and wildlife habitat;*
- *preserve arts and cultural heritage;*
- *support parks and trails;*
- *and protect, enhance, and restore lakes, rivers, streams, and groundwater.*

The Clean Water, Land, and Legacy Fund have several grant and loan programs that could potentially be used for implementation of the BMPs and education and outreach activities. The various programs and sponsoring agencies related to clean water funding and others are:

- Agriculture BMP Loan Program (MDA)
- Clean Water Fund Grants (BWSR)
- Clean Water Partnership (MPCA)
- Environment and Natural Resources Trust Fund (Legislative-Citizen Commission on Minnesota Resources)
- Environmental Assistance Grants Program (MPCA)
- Phosphorus Reduction Grant Program (Minnesota Public Facilities Authority)
- Section 319 Grant Program (MPCA)
- Small Community Wastewater Treatment Construction Loans & Grants (Minnesota Public Facilities Authority)
- Source Water Protection Grant Program (Minnesota Department of Health)
- Surface Water Assessment Grants (MPCA)
- Wastewater and storm water financial assistance (MPCA)
- Conservation Partners Legacy Grant Program (DNR)
- Environmental Quality Incentives Program (Natural Resources Conservation Service (NRCS))
- Conservation Reserve Program (USDA)
- Minnesota Agricultural Water Quality Certification Program

There are several grant and loan programs through the federal government that could be used for education and outreach as well as purchasing equipment and implementation of the BMPs. A list of federal grant programs can be found at: water.epa.gov/grants funding/.

Table 3-2. Diamond Creek Subwatershed Restoration and Protection Strategies

Key for shading: Red = Restoration Strategies; Green = Protection Strategies or Elements for Non-Assessed Water bodies

Key for Government Unit Responsibilities: P = Primary/Lead Role; S = Secondary Role; A = Assist as Needed

	Waterbody and Location			Water Quality					Governmental Units with Primary Responsibility											
Major Sub-watershed	Waterbody (IDs)	Location and Upstream Influence Counties; Cities and other MS4s	Parameter (incl. non-pollutant stressors)	TMDL Baseline Conditions	TMDL Goals/ Targets and Estimated % Reduction	Strategies (see Table 3-7)	Strategy types and estimated scale of adoption needed to meet final water quality target	Interim 10-yr Milestones	ECWMC	Hennepin County	UMN Extension	MPCA	DNR	MNDOT	MDA	BWSR	NRCS	Three Rivers Park District	City of Dayton	City of Rogers	Estimated Year to Achieve Water Quality Target
Diamond Creek	Diamond Lake (27-0125)	MS4s: Hennepin Co., MnDOT, Dayton, Rogers	Diamond Lake TP	2,871 lbs/yr	832 lbs/yr 73% Reduction	Reduce in-water loading (Lake TP: internal load reduction goal is 630 lbs, 30% of total load reduction goal for lake)	Monitor fish population to determine presence of common carp and other rough fish Establish removals/barriers as needed	Monitor once every 3-5 years	S				P					A	A		2035
							Develop vegetation plan to manage curly-leaf pondweed	Develop plan within 5 years, treat as necessary, monitor annually	S				S						P		
							Drawdown and/or internal load (chemical) treatment feasibility studies	Complete studies (5 years), implement findings (10 years)	S				S			S			P		
						Improve urban SW mgt. (Lake TP)	Perform urban BMP subwatershed assessment study Implement 5-10 SW retrofit projects	Complete study (5 years), implement BMPs (10 years)	P	S						S		S	S	S	
	Diamond Creek (525)	MS4s: Dayton	Stream *E. coli*	89 – 374 cfu/100mL (monthly geomeans)	0% - 66% reduction depending on month		Implement updated Commission standards for runoff volume and rate control for new development projects throughout watershed	New standards effective January 1, 2015	P										P	P	
						Improve upland/field surface runoff controls (Lake TP, Stream TP/DO, *E. coli*)	Perform rural subwatershed assessments study Identify and implement 5-10 rural/agricultural BMPs	Implement 1-5 BMPs (5 years), 5-10 BMPs (10 years)	P	A	A						A	A	S	S	
						Improve fertilizer and manure application mgt. (Lake TP, Stream TP/DO, *E. coli*)	Promote/educate agronomic rates, chemical treatment of manure, and spreading in sensitive areas Provide resources for soil nutrient testing Hold 2-5 workshops to engage farmers and provide educational materials	Hold 2-5 workshops and work with 5-10 willing landowners	P	P	P				P	S	A	A	S	S	
			Stream DO	Current Phosphorus: 354 µg/L	Phosphorus Goal: 100 µg/L 72% Reduction		Implement non-production animal operation siting and management ordinance as per 2015 approved watershed plan	Cities adopt ordinance by August 2017	S						A				P	P	
						Address failing septic systems (Lake TP, Stream TP/DO, *E. coli*)	Identify and upgrade 100% of the ITPHS systems and systems in the shoreland areas	100% of ITPHS systems upgraded within 10 years		P									S	S	
			Stream Fish & Macro IBI	Primary Stressors: Altered Hydrology, Altered Physical Habitat, Excess Sediment, Low DO		Improve riparian vegetation (Stream TP/DO, Stream Biota)	Map and inventory stream buffers on all DNR streams and ditches in watershed	Complete inventory (by July 2016)	S	S			P								
							Increase riparian buffers and enforce DNR buffer rules on 100% of streams and tributaries	Buffers in place on public waters by July 2017, on public ditches by November 2018	S	P						P					
Diamond Creek cont.	Diamond Creek (525) cont.		Stream Fish & Macro IBI cont.			Restore/enhance channel (Stream TP/DO, Stream Biota)	Perform stream channel walking survey to identify and implement in-channel BMPs and/or stream corridor baseflow enhancement projects	Complete survey (within 4 years), Complete 2-5 projects within 10 years	P	A			S			S		A	A	A	2035

Major Sub-watershed	Waterbody and Location			Water Quality					Governmental Units with Primary Responsibility												Estimated Year to Achieve Water Quality Target
	Waterbody (IDs)	Location and Upstream Influence Counties; Cities and other MS4s	Parameter (incl. non-pollutant stressors)	TMDL Baseline Conditions	TMDL Goals/ Targets and Estimated % Reduction	Strategies (see Table 3-7)	Strategy types and estimated scale of adoption needed to meet final water quality target	Interim 10-yr Milestones	ECWMC	Hennepin County	UMN Extension	MPCA	DNR	MNDOT	MDA	BWSR	NRCS	Three Rivers Park District	City of Dayton	City of Rogers	
						Monitor (DO)	Conduct early morning longitudinal DO surveys to determine specific reaches that may be causing low DO in Diamond Creek Begin developing strategies to restore/improve problem reaches	Conduct surveys within 4 years	P	A								A	S		
	Grass Lake (27-0135)	MS4s: Rogers and Dayton	Not assessed, no water quality (WQ) data	Monitored outflow from lake 302 µg/L (average)	---	Monitor	Collect bathymetry data and monitor water WQ	Monitor as funding and opportunity arises	P									A	S	S	
	Watershed Wide		Social Infrastructure (to address all pollutants/ stressors)	---	---	Improve education and outreach	K-12 Watershed Education	Ongoing	P			A				A					Ongoing
							General public outreach and education		P			A	A			S			S	S	
						Improve coordination/ collaboration	Involve citizen networks in water resource related projects		P			A	A			S			P	P	
							Coordinate planning/improvement projects with stakeholders		P	S									P	P	
						Implement/review policies and rules	Ongoing review of policy and procedures to meet WLA goals		P	P		A		P		S			P	P	

Table 3-3. Rush Creek Subwatershed Restoration and Protection Strategies

Key for shading: Red = Restoration Strategies; Green = Protection Strategies or Elements for Non-Assessed Water bodies

Key for Government Unit Responsibilities: P = Primary/Lead Role; S = Secondary Role; A = Assist as Needed

Major Sub-watershed	Waterbody and Location		Parameter (incl. non-pollutant stressors)	Water Quality		Strategies (see Table 3-7)	Strategy types and estimated scale of adoption needed to meet final water quality target	Interim 10-yr Milestones	Governmental Units with Primary Responsibility														Estimated Year to Achieve Water Quality Target
	Waterbody (IDs)	Location and Upstream Influence Counties; Cities and other MS4s		TMDL Baseline Conditions	TMDL Goals / Targets and Estimated % Reduction				ECWMC	Hennepin County	UMN Extension	MPCA	DNR	MNDOT	MDA	BWSR	NRCS	Three Rivers Park District	City of Corcoran	City of Dayton	City of Maple Grove	City of Rogers	
Rush Creek	Henry Lake (27-0125)	MS4s: None	Henry Lake TP	972 lbs/yr	183 lbs/yr 81% Reduction	Reduce in-lake loading (internal load reduction goal is 221 lbs, 28% of total load reduction goal for lake)	Monitor fish population to determine presence of common carp and other rough fish Establish removals/barriers as needed	Monitor once every 3-5 years once public access is established	S				P									A	2035
							Develop vegetation plan to manage curly-leaf pondweed	Develop plan within 2 years after public access is established, treat as necessary, monitor annually	S				S									P	
							Drawdown and/or internal load (chemical) treatment feasibility studies	Complete studies within 4 years after public access is established), implement findings within 8 years	S				S			S						P	
						Improve urban SW mgt. (All impairments)	Perform urban BMP subwatershed assessment study Implement SW retrofit projects if appropriate	Complete study (5 years), implement BMPs (10 years)	P	A						A			S	S	S	S	
							Implement updated Commission standards for runoff volume and rate control for new development projects throughout watershed	New standards effective January 1, 2015	P										P	P	P	P	
	Rush Creek (528)	MS4s: Corcoran, Dayton, Maple Grove, Rogers, Hennepin County, MnDOT	Stream *E. coli*	25 – 295 cfu/100mL (monthly geomeans)	0% - 57% reduction depending on month	Improve upland/field surface runoff controls (Lake TP, Stream TP/DO, *E. coli*)	Perform rural subwatershed assessments study Identify and implement 10-20 rural/agricultural BMPs	Implement 3-5 BMPs (5 years), 10-20 BMPs (10 years)	P	A	A						A	A				S	
						Improve fertilizer and manure application mgt. (Lake TP, Stream TP/DO, *E. coli*)	Promote/educate agronomic rates, chemical treatment of manure, and spreading in sensitive areas Provide resources for soil nutrient testing. Hold 2-5 workshops to engage farmers and provide educational materials	Hold 2-5 workshops and work with 5-10 willing landowners	P	P	P				P	S	S		S	S	S	S	
			Stream DO	Current Phosphorus: 503 µg/L	Phosphorus Goal: 100 µg/L 80% Reduction		Implement non-production animal operation siting and management ordinance as per 2015 approved watershed plan	Cities adopt ordinance by August 2017	S										P	P	P	P	
						Improve livestock mgt. (Lake TP, Stream TP/DO, *E. coli*)	Perform rural subwatershed assessments study Identify and implement up to 20 livestock/agricultural BMPs	Implement 3-5 BMPs (5 years), 10-20 BMPs (10 years)	P	A	A						A	A	A	A	A	A	
						Address failing septic systems (Lake TP, Stream TP/DO, *E. coli*)	Identify and upgrade 100% of the ITPHS systems and systems in the shoreland areas	100% of ITPHS systems upgraded within 10 years		P									S	S	S	S	
			Stream Fish & Macro IBI																				

Major Sub-watershed	Waterbody and Location		Parameter (incl. non-pollutant stressors)	Water Quality		Strategies (see Table 3-7)	Strategy types and estimated scale of adoption needed to meet final water quality target	Interim 10-yr Milestones	Governmental Units with Primary Responsibility														Estimated Year to Achieve Water Quality Target
	Waterbody (IDs)	Location and Upstream Influence Counties; Cities and other MS4s		TMDL Baseline Conditions	TMDL Goals / Targets and Estimated % Reduction				ECWMC	Hennepin County	UMN Extension	MPCA	DNR	MNDOT	MDA	BWSR	NRCS	Three Rivers Park District	City of Corcoran	City of Dayton	City of Maple Grove	City of Rogers	
				Primary Stressors: Altered Hydrology, Excess Sediment, Low DO		Improve riparian vegetation (Stream TP/DO, Stream Biota)	Map and inventory stream buffers on all DNR streams and ditches in watershed	Complete inventory (by July 2016)	S	S			P						S	S	S	S	
Rush Creek cont.	Rush Creek (528) cont.		Stream Fish & Macro IBI cont.	Primary Stressors: Altered Hydrology, Excess Sediment, Low DO cont.		Improve riparian vegetation (Stream TP/DO, Stream Biota)	Increase riparian buffers and enforce DNR buffer rules on 100% of streams and tributaries	Buffers in place on public waters by July 2017, on public ditches by November 2018	S	P						P							2035
						Restore/enhance channel (Stream TP/DO, Stream Biota)	Undertake 1,000 linear foot bank stabilization and erosion control project within Rush Creek reach downstream of confluence with South Fork Rush Creek Widen stream along existing alignment, plant native vegetation to prevent erosion	Complete project within 10 years	S							A		P					
							Stabilize and restore approximately 11,000 feet of Rush Creek east of I-94 and west of Fernbook Lane Restore native vegetation to provide habitat for wildlife, creating natural area for city demonstration	Complete project within 10 years	S							A					P		
							Perform stream channel walking survey to identify and implement in-channel BMPs	Complete survey (5 years), Complete 1-5 projects within 10 years	P	A								A	S	S	S	S	
						Monitor (DO)	Conduct early morning longitudinal DO surveys to determine specific reaches that may be causing low DO in Rush Creek Begin developing strategies to restore/improve problem reaches	Conduct survey within 4 years	P	A								A	S	S	S	S	
	Lake Dubay (27-0129)	MS4: City of Dayton	None	WQ currently meets state WQ standards	---	Monitor	Obtain bathymetric information, conduct early and late summer aquatic plant surveys, and continue water quality monitoring	Monitor as funding and opportunity arises	P									A		S			Ongoing
						Improve urban SW mgt.	Avoid enlarging the watershed draining to the lake if development occurs in this area of the city of Dayton	Ongoing												P			
							Firm application of the Commission's new development standards adopted in 2015 for SW management and buffers	New standards effective January 1, 2015	P											P			
	Meadow Lake (27-0301)	MS4: Rogers	Not assessed, no WQ data	---	---	Monitor	Collect bathymetry data and monitor water WQ	Monitor as funding and opportunity arises	P									A				S	
	Stone's Throw Wetland	Corcoran, Rogers	NA	---	---	In-channel restoration (wetland)	Acquire easements and restore 135 acre wetland adjacent to County Ditch #16	Complete project within 5 years	S	S			S			A			P			P	
				---	---		K-12 Watershed Education	Ongoing	P			A				A							Ongoing

Major Sub-watershed	Waterbody and Location		Parameter (incl. non-pollutant stressors)	Water Quality		Strategies (see Table 3-7)	Strategy types and estimated scale of adoption needed to meet final water quality target	Interim 10-yr Milestones	Governmental Units with Primary Responsibility														Estimated Year to Achieve Water Quality Target
	Waterbody (IDs)	Location and Upstream Influence Counties; Cities and other MS4s		TMDL Baseline Conditions	TMDL Goals / Targets and Estimated % Reduction				ECWMC	Hennepin County	UMN Extension	MPCA	DNR	MNDOT	MDA	BWSR	NRCS	Three Rivers Park District	City of Corcoran	City of Dayton	City of Maple Grove	City of Rogers	
	Watershed Wide		Social Infrastructure (to address all pollutants/ stressors)			Improve education and outreach	General public outreach and education		P			A	A			S			S	S	S	S	
						Improve coordination/ collaboration	Involve citizen networks in water resource related projects		P			A	A			S			P	P	P	P	
							Coordinate planning/improvement projects with stakeholders		P	S									P	P	P	P	
						Implement/ review policies and rules	Ongoing review of policy and procedures to meet WLA goals		P	P		A		P		S			P	P	P	P	

Table 3-4. South Fork Rush Creek Subwatershed Restoration and Protection Strategies

Key for shading: Red = Restoration Strategies; Green = Protection Strategies or Elements for Non-Assessed Water bodies

Key for Government Unit Responsibilities: P = Primary/Lead Role; S = Secondary Role; A = Assist as Needed

	Waterbody and Location			Water Quality					Governmental Units with Primary Responsibility													
Major Sub-watershed	Waterbody (IDs)	**Location** and Upstream Influence Counties; Cities and other MS4s	Parameter (incl. non-pollutant stressors)	TMDL Baseline Conditions	TMDL Goals / Targets and Estimated % Reduction	Strategies (see Table 3-7)	Strategy types and estimated scale of adoption needed to meet final water quality target	Interim 10-yr Milestones	ECWMC	Hennepin County	UMN Extension	MPCA	DNR	MnDOT	MDA	BWSR	NRCS	Three Rivers Park District	City of Corcoran	City of Maple Grove	City of Medina	Estimated Year to Achieve Water Quality Target
South Fork Rush Creek	South Fork Rush Creek (732)	MS4s: Corcoran, Maple Grove, Medina, Hennepin County	Stream *E. coli* (732)	79 – 342 cfu/100mL (monthly geomeans)	0% - 63% reduction depending on month	Improve urban SW mgt. (All impairments)	Perform urban BMP subwatershed assessment study Implement 1-4 SW retrofit projects if appropriate	Complete study (5 years), implement BMPs (10 years)	P	A						A		A	S	S		2035
							Implement updated Commission standards for runoff volume and rate control for new development projects throughout watershed	New standards effective January 1, 2015	P										P	P	P	
						Improve upland/field surface runoff controls (*E. coli*)	Perform rural subwatershed assessments study Identify and implement 10-20 rural/agricultural BMPs	Implement 3-5 BMPs (5 years), 10-20 BMPs (10 years)	P	A	S					A		A	S	S	S	
						Improve fertilizer and manure application mgt. (*E. coli*)	Promote/educate agronomic rates, chemical treatment of manure, and spreading in sensitive areas Provide resources for soil nutrient testing Hold 2-5 workshops to engage farmers and provide educational materials	Hold 2-5 workshops and work with 5-10 willing landowners	P	P	P				P	S		A	S	S	S	
			Stream Fish and Macro IBI (732)	Primary Stressors: Altered Hydrology, Altered Physical Habitat, Excess Sediment, Excess Phosphorus, Low DO			Implement non-production animal operation siting and management ordinance as per 2015 approved watershed plan	Cities adopt ordinance by August 2017	S	S					A				P	P	P	
						Address failing septic systems (*E. coli*)	Identify and upgrade 100% of the ITPHS systems and systems in the shoreland areas	100% of ITPHS systems upgraded within 10 years		P									S	S	S	
	South Fork Rush Creek (760)	MS4s: Corcoran, Medina, Maple Grove, Hennepin County	Stream Fish & Macro IBI (760)	Primary Stressors: Altered Hydrology, Altered Physical Habitat, Excess Sediment, Excess Phosphorus, Low DO		Improve riparian vegetation (Stream Biota)	Map and inventory stream buffers on all DNR streams and ditches in watershed	Complete inventory (by July 2016)	S	S			P									
							Increase riparian buffers and enforce DNR buffer rules on 100% of streams and tributaries	Buffers in place on public waters by July 2017, on public ditches by November 2018	S	P						P			P	P	P	
						Restore/ enhance channel (Stream Biota)	Stabilize and restore up to 4,500 of Rush Creek north of 101 Avenue, significantly reducing potential for bank erosion and sediment transportation to Elm Creek Restore native vegetation to provide habitat for wildlife	Complete project within 10 years	S	A									P	P		
							Perform stream channel walking survey to identify and implement in-channel BMPs and/or stream corridor baseflow enhancement projects	Complete survey (5 years), Complete 2-5 projects within 10 years	P	A								A				
						Monitor (DO)	Conduct early morning longitudinal DO surveys to determine specific reaches that may be causing low DO in S. Fork Rush Creek Begin developing strategies to restore/improve problem reaches	Conduct surveys within 4 years	P									A				

Major Sub-watershed	Waterbody and Location		Parameter (incl. non-pollutant stressors)	Water Quality		Strategies (see Table 3-7)	Strategy types and estimated scale of adoption needed to meet final water quality target	Interim 10-yr Milestones	Governmental Units with Primary Responsibility														Estimated Year to Achieve Water Quality Target
	Waterbody (IDs)	**Location** and Upstream Influence Counties; Cities and other MS4s		TMDL Baseline Conditions	TMDL Goals / Targets and Estimated % Reduction				ECWMC	Hennepin County	UMN Extension	MPCA	DNR	MnDOT	MDA	BWSR	NRCS	Three Rivers Park District	City of Corcoran	City of Maple Grove	City of Medina	
South Fork Rush Creek cont.	Jubert Lake (27-0135)	MS4s: Corcoran	Not assessed, but likely impaired	No recent monitoring data	---	Monitor	Obtain bathymetric information, conduct early and late summer aquatic plant surveys, and initiate water quality monitoring and assessment	Monitor as funding and opportunity arises	P									A	S			Ongoing
						Reduce in-water loading	Assess internal loading, initially through collection and analysis of hypolimnetic phosphorus concentrations and DO/temperature profile data, and perhaps later through analysis of intact sediment cores to estimate oxic and anoxic phosphorus release rates	Monitor as funding and opportunity arises	P									A	S			
						Improve urban SW mgt.	Avoid enlarging the watershed draining to the lake if development occurs in this area of the city of Corcoran	Ongoing	S										P			
							Firm application of the Commission's new development standards adopted in 2015 for SW management and buffers	New standards effective January 1, 2015	P	A									P			
	Scott Lake (27-1102)	MS4s: Corcoran	Not assessed, no WQ data	---	---	Monitor	Collect bathymetry data and monitor water WQ	Monitor as funding and opportunity arises	P									A	S			
	Wetland DNR# 27-0437	Maple Grove, Corcoran	NA	---	---	In-channel restoration (wetland)	Develop channel protection volume storage, flood storage and associated water quality improvements within wetland complex at Maple Grove/Corcoran boundary by providing extended detention within the storage basin	Complete project within 5 years	S										P	P		
	Watershed wide		Chloride	Variable – based on the year salt reduction BMP's began	<230mg/L	Chloride management	Promote and adopt strategies included in the CMP www.pca.state.mn.us/r0pgb86	Ongoing	S	P		A		P					P	P	P	Ongoing
	Watershed wide		Social Infrastructure (to address all pollutants/ stressors)	---	---	Improve education and outreach	K-12 Watershed Education	Ongoing	P			A				A						Ongoing
							General public outreach and education		P			A	A			S			S	S	S	
						Improve coordination/ collaboration	Involve citizen networks in water resource related projects		P			A	A			S			P	P	P	
							Coordinate planning/improvement projects with stakeholders		P	S									P	P	P	
						Implement/ review policies and rules	Ongoing review of policy and procedures to meet WLA goals		P	P		A		P		S			P	P	P	