DRAFT

COMPREHENSIVE WATER SUPPLY PLAN

COMPREHENSIVE WATER SUPPLY PLAN

HENNEPIN COUNTY | MEDINA, MINNESOTA

October 6, 2017

Prepared for:
City of Medina
2052 County Road 24
Medina, MN 55340

WSB PROJECT NO. 2712-53

Table of Contents

EXECUTIVE SUMMARY

Introduction

The City of Medina's 2040 Comprehensive Water Supply Plan evaluates the near and long-term needs of the City's water system. This Plan has been prepared according to the guidelines established by the Metropolitan Council and the Minnesota Department of Natural Resources (DNR). The attached Water Supply Plan conforms to the template provided by the DNR, while this Comprehensive Plan expands upon the template and provides further information for City and Metropolitan Council planning.

Existing Facilities

The City of Medina provides roughly 150 million gallons of water each year through three separate and isolated water distribution systems. These include the Hamel system in northeast Medina, the Independence Beach system in western Medina, and the Morningside system in southern Medina.

The Hamel system is the largest of the three systems. It is supplied by six active wells (3, 4, 5, 6, 7 and 8) and one reserve well (2). The raw water from Wells 3, 4, 6 and 7 is treated at the Water Treatment Plant (WTP); the raw water from Well No. 5 is treated with chlorine, fluoride, and polyphosphate at the wellhouse and pumped directly into the distribution system; and the raw water from Well No. 8 can be treated at the wellhouse or at the WTP. The Hamel system has one 400,000 gallon elevated storage facility, and an additional 200,000 gallons of clearwell storage at the WTP.

The Independence Beach and Morningside systems are small independent systems that provide only minimal storage (non fire fighting) and pressure to their respective distribution systems, and each is served by two wells as detailed in Table 1.

Apart from the Hamel, Independence Beach, and Morningside systems, a small portion of south central Medina receives service from Orono, and a small portion of southwestern Medina receives service from Maple Plain.

Population and Water Demands

The population served by the City of Medina's water system has fluctuated over the last ten years, with an overall trend towards growth. The City had a total population served of about 4,000 people in 2015.

The average total water delivered per year across all three systems from 2010 to 2015 was 149.4 million gallons. Since 2007, Medina has seen a decrease in residential per capita demand, with a total average residential demand of 64 gallons per capita per day from 2010 to 2015. This decrease was achieved through the implementation of several water conservation actions including changes in the water rate structure, distribution system improvements, and, most importantly, a new irrigation policy which prohibits the use of treated municipal water for lawn irrigation.

To reduce unaccounted for water, the City periodically monitors leaks in the distribution system and conducts water audits monthly. The City is also undergoing meter repair and replacement and meters annual hydrant flushing.

Growth and Demand Projections

The City of Medina is currently developing and growing, with a majority of the growth expected in the Hamel system. The Hamel system is projected to serve about 5,700 people in 2040, with a projected maximum day demand for potable water of 1.23 million gallons and a maximum day demand for irrigation water of 1.42 million gallons. Together, both systems have a total maximum day water demand of 2.65 million gallons, although the irrigation portion does not require treatment, storage, or distribution. The Independence Beach and Morningside areas are currently built out and are not expected to see appreciable growth in their population or water demands.

Proposed Improvements

The City's existing production and treatment facilities are projected to satisfy demand through the year 2040. However, if the City would like to treat the entire capacity from Wells 4, 6, 7 and 8 simultaneously, it will need to expand the capacity of the Water Treatment Plant from 2.0 MGD to 3.0 MGD.

The City's recommended storage capacity to satisfy maximum day fire fighting flow is projected to exceed the existing storage capacity by 2040. Therefore, it is recommended that the City construct a new 400,000 gallon elevated storage facility between 2020 and 2030.

The City will need to expand its distribution network per the Future Land Use Plan for low density residential, mixed residential, commercial, and general business areas in the northeast quadrant of Medina.

Recommendations

The following actions are recommended to the City of Medina and the Medina City Council based on the data and analysis contained within this study.

1. Adopt this Comprehensive Water Supply Plan as a guide for the development of the City's water system, and incorporate the proposed improvements into the City's Capital Improvement Plan.
2. Plan for the addition of an elevated storage facility, including any easements required to connect the site to the existing water system.
3. Complete and submit Wellhead Protection Plan evaluation reports to the Minnesota Department of Health every 2.5 years and a summary report in 2020.

INTRODUCTION

Purpose

This Comprehensive Water Plan is a section of the City's 2040 Comprehensive Plan. The purpose of the Comprehensive Water Plan is to provide an overview of the City's current drinking water resources, infrastructure, policies, and challenges, and to present future plans. A water distribution map is included in Appendix 12, which depicts the existing system and the proposed improvements.

This Comprehensive Water Supply Plan has been prepared according to the guidelines established by the Metropolitan Council and the Minnesota Department of Natural Resources (DNR) per Minnesota Statute 473.859 which requires water supply plans be completed by all local units of government in the seven-county Metropolitan Area. The attached Water Supply Plan conforms to the template provided by the DNR, while this Comprehensive Plan satisfies the Metropolitan Council's requirements.

Background

The City of Medina, located in Hennepin County, is most fully developed in its northeast quadrant along Highway 55. There are pockets of development along the western, southwestern and southern boundaries of Medina as well. These separate areas of development are served by independent water systems, as described in more detail in the following section. Most of the land area in the City falls outside of these service areas, and that area includes approximately 700 homes which are served by private wells.

The scope of this study includes the population projections from the City's overall Comprehensive Plan, consistent with the Metropolitan Council Environmental Services (MCES) City System Statement, to project water system demands for the City of Medina through the year 2040. The 2040 service area was defined based on the future Land Use Plan prepared for the City's 2040 Comprehensive Plan. Existing and future water demands were calculated for the City based on the historical data and population projections.

Data Available

The following sources of information were used to prepare this report:

- Water Supply Plan for the City of Medina, prepared by WSB & Associates, Inc. dated Feb. 2017
- MCES System Statement for the City of Medina
- MCES Community Profile for the City of Medina
- Water usage data as reported by the City to the DNR's Minnesota Permitting and Reporting System (MPARS)

General Contact Information

City of Medina Water System
DNR Water Appropriation Permit Numbers: 1960-0424, 1976-6007, 1976-6030
Ownership: Public
Metropolitan Council Area, Hennepin County
MDH Supplier Classification: Municipal

Public Works Director: Steve Scherer
2052 County Road 24
Medina, MN 55340
Phone: (763) 473-8842

Water Use Categories and Definitions

General water use categories and definitions used in this report, as defined by the Department of Natural Resources, are as follows:

- ***Residential*** uses consist of water being used for normal household purposes, such as drinking, food preparation, bathing, washing clothes and dishes, flushing toilets, and watering lawns and gardens.
- ***Institutional*** uses consist of those for hospitals, nursing homes, day care centers, and other facilities that use water for essential domestic requirements. This includes public facilities and public metered uses. Institutional water-use records are typically maintained for emergency planning and allocation purposes.
- ***Commercial*** uses consist of water used by motels, hotels, restaurants, office buildings, and commercial facilities.
- ***Industrial*** uses consist of water used for thermoelectric power (electric utility generation) and other industrial uses such as steel, chemical and allied products, food processing, paper and allied products, mining, and petroleum refining.
- ***Wholesale deliveries*** consist of bulk water sales to other public water suppliers.
- ***Unaccounted water*** is the volume of water withdrawn from all sources minus the volume sold.
- ***Non-essential water uses*** as defined by Minnesota Statutes 103G.291, include lawn sprinkling, vehicle washing, golf course and park irrigation, and other non-essential uses. Some of the above categories also include non-essential uses of water.

EXISTING SYSTEM

The City of Medina provides roughly 150 million gallons of water each year and has a growing total population of over 5,000 people. The City provides water to three distinct regions: the Hamel system in the northeast quadrant, the Independence Beach system along the western boundary, and the Morningside system along the southern boundary. These three regions make up the Medina water system, and they are maintained an analyzed as unique regions due to their distinct locations and water usage.

Water Sources and Treatment

In total, there are nine active wells and two reserve wells across the three regions. These wells are listed in Table 1 below (Table 4 in the Water Supply Plan), and well records and maintenance reports are included in Appendix 1.

Table 1 – Existing Well Summary

Region	Well Name and ID	Year Installed	Capacity (gpm)	Depth (feet)	Status	Treatment
Hamel	Hamel 2 158087	1978	150	601	Reserve/ Emergency	None
	Hamel 3 122239	1983	150	590	Reserve/ Emergency	WTP*
	Hamel 4 520048	1993	800	770	Active	WTP*
	Hamel 5 709925	2004	400	240	Active	Chlorine, fluoride, polyphosphate
	Hamel 6 747666	2007	400	378	Active	WTP*
	Hamel 7 759809	2008	800	405	Active/ Irrigation**	WTP*
	Hamel 8 814752	2016	1200	398	Active/ Irrigation**	Optional WTP*
Independence Beach	IB-1 100219	1975	600	240	Active	Chlorine, fluoride, polyphosphate
	IB-2 448765	1988	150	241	Active	Chlorine, fluoride, polyphosphate
Morningside	MS-1 208009	1961	90	205	Active	Chlorine, fluoride, polyphosphate
	MS-2 223378	1960	175	204	Active	Chlorine, fluoride, polyphosphate

*Wells 3, 4, 6, 7 are pumped to the WTP for removal of radium, iron, and manganese. Well 8 can also be pumped to the WTP or directly into the distribution system after chemical addition. Chlorine and fluoride are added to disinfect and prevent tooth decay, respectively. The WTP can currently produce up to 2.0 million gallons per day and could be expanded to produce up to 3.0 million gallons per day. After treatment, the water is stored in a 200,000 gallon clearwell. High service pumps receive signals from the elevated storage tank to supply water from the clearwell to the distribution system as needed.

**The flows from Wells 7 and 8 may be diverted and used untreated for irrigation, reducing the strain on treatment, storage, and distribution capacity within the primary water system. Well 7 is used to irrigate the Lennar Addition and the City Park during the summer months. Well 8 can be used to irrigate the Enclave at Brockton addition.

The Independence Beach and Morningside systems are small independent systems that provide only minimal storage (non fire protection) and pressure to their respective distribution systems. The treatment provided at the four wells in these two regions consists of the addition of chlorine, fluorine, and polyphosphate.

The City's water level monitoring plan is included in Appendix 2, and water level graphs for each well are included in Appendix 3.

Water Storage

The Hamel system includes one 400,000 gallon elevated storage facility, which stabilizes pressures during peak water demands and serves as a source of water during fires or power outages. When combined with the 200,000 gallon clearwell storage, the total existing usable storage volume in the Hamel system is 600,000 gallons.

Water Distribution

The Hamel water distribution system includes water mains of nominal diameter 6-inch up to 18-inch. The piping materials, in order of most used to least used, are PVC, ductile iron, copper, cast iron, corrugated metal and polyethylene. The larger 12-inch, 16-inch and 18-inch mains run along Highway 55, Arrowhead Drive, Hamel Road and the west edge of Legion Park.

The Independence Beach system is supplied by 6-inch and 8-inch PVC and ductile iron pipe, and the Morningside system is supplied by 6-inch and 8-inch PVC pipe.

Apart from these three distinct systems, a small portion of south central Medina receives service from Orono, and a small portion of south western Medina receives service from Maple Plain. These two small service areas are shown on the water distribution map in Appendix 12.

Water System Value

An estimated value for the City of Medina's water distribution system based on existing pipe diameters and lengths is given in Table 2. This represents a rough estimate of what it would cost to replace the infrastructure based on the cost of construction in 2017. The costs are specific to the water system and do not include other infrastructure improvements such as street, other utility improvements, or overhead costs associated with a larger project scope.

Table 2 – Water System Value

Item	Quantity or Total Length (ft)	Estimated Cost
Well and Pump House	11	$13,200,000
Water Treatment Plant (2.0 MGD)	1	$8,000,000
Water Tower (400,000 gallon)	1	$1,500,000
6-inch Water Main	22,743	$1,365,000
8-inch Water Main	145,983	$9,489,000
10-inch Water Main	2,619	$196,000
12-inch Water Main	54,214	$4,066,000
16-inch Water Main	19,753	$1,975,000
Total		**$39,791,000**

POPULATION AND WATER DEMANDS

Existing Water Demand

The City of Medina had a total population served of about 4,000 people in 2015. Population, total water use, and total demand data from the past ten years for each of the three distinct areas within the City's water system, as well as in total, are listed in Tables 3A-D. A more detailed breakdown of water use by customer category is listed in Tables 2a-d in the Water Supply Plan. In 2013, the City began monitoring and estimating water supply service (WSS) and water main break use in an effort to better track its unmetered water use.

Table 3 – Historic Water Demand

Table 3A – Hamel System

Year	Pop. Served	Total Connections	Total Water Use (MG)	Total Water Pumped (MG)	% Unmetered/ unaccounted	Average Daily Demand (MGD)	Max Daily Demand (MG)	Total per capita Demand (GPCD)
2005	2,092	724	109.5	117.4	6.7%	0.32	0.97	169
2006	2,124	735	139.7	147.0	5.0%	0.40	1.28	202
2007	2,159	747	161.6	166.9	3.2%	0.46	1.49	220
2008	2,199	761	139.7	149.4	6.5%	0.41	1.17	193
2009	2,225	770	134.5	148.2	9.3%	0.41	1.01	211
2010	2,254	780	114.1	134.0	14.9%	0.37	1.02	193
2011	2,309	799	117.2	144.5	18.9%	0.40	0.96	205
2012	2,445	846	145.0	170.0	14.7%	0.47	1.24	226
2013	2,829	979	148.4	163.8	9.4%	0.45	1.44	184
2014	3,162	1094	142.4	164.4	13.4%	0.45	0.84	122
2015	3,350	1,159	147.0	162.7	9.7%	0.45	0.94	151
Avg. 2010-2015	**2,725**	**943**	**135.7**	**156.6**	**13.5%**	**0.43**	**1.07**	**180**

*WSS includes water for ice rinks, irrigation ponds, and hydrant flushing

Table 3B – Independence Beach System

Year	Pop. Served	Total Residential Connections	Total Water Use (MG)	Total Water Pumped (MG)	% Unmetered/ unaccounted	Average Daily Demand (MGD)	Max Daily Demand (MG)	Total per capita Demand (GPCD)
2005	445	154	11.7	13.3	11.7%	0.036	0.118	82
2006	445	154	11.1	16.4	32.3%	0.045	0.152	101
2007	445	154	12.4	14.6	14.9%	0.040	0.103	90
2008	445	154	11.1	14.3	22.6%	0.039	0.177	88
2009	448	155	10.3	13.6	24.8%	0.037	0.231	83
2010	448	155	9.0	11.2	19.9%	0.031	0.073	68
2011	448	155	8.8	11.5	23.5%	0.031	0.054	70
2012	448	155	9.4	12.1	22.0%	0.033	N/A	74
2013	448	155	10.0	10.9	8.3%	0.030	0.061	67
2014	448	155	8.0	10.5	23.4%	0.029	0.045	64
2015	448	155	8.4	11.2	24.8%	0.031	0.051	69
Avg. 2010-2015	**448**	**155**	**8.9**	**11.2**	**20.3%**	**0.031**	**0.057**	**69**

*WSS includes water for ice rinks, irrigation ponds, and hydrant flushing

Table 3C – Morningside System

Year	Pop. Served	Total Residential Connections	Total Water Use (MG)	Total Water Pumped (MG)	Percent Unmetered/ unaccounted	Average Daily Demand (MGD)	Max Daily Demand (MG)	Total per capita Demand (GPCD)
2005	231	80	5.6	5.9	4.4%	0.016	0.040	70
2006	231	80	8.3	6.2	-	0.017	0.040	74
2007	234	81	6.2	7.8	20.7%	0.021	0.050	92
2008	234	81	5.0	6.7	25.9%	0.018	0.090	78
2009	234	81	5.3	6.8	21.6%	0.019	0.091	80
2010	234	81	4.9	5.4	9.0%	0.015	0.032	64
2011	234	81	4.8	5.2	8.8%	0.014	0.027	61
2012	234	81	5.2	5.7	7.3%	0.016	0.039	66
2013	234	81	4.9	5.2	5.5%	0.014	0.027	60
2014	234	81	4.6	5.2	12.0%	0.014	0.024	61
2015	234	81	4.3	4.7	8.2%	0.013	0.036	55
Avg. 2010-2015	**234**	**81**	**4.8**	**5.2**	**8.6%**	**0.014**	**0.031**	**61**

*WSS includes water for ice rinks, irrigation ponds, and hydrant flushing

Table 3D – Total Medina System (Hamel + Independence Beach + Morningside)

Year	Pop. Served	Total Connections	Total Water Use (MG)	Total Water Pumped (MG)	% Unmetered/ unaccounted	Average Daily Demand (MGD)	Max Daily Demand (MG)	Total per capita Demand (GPCD)
2005	2,768	958	126.8	136.5	7.1%	0.37	1.12	135
2006	2,800	969	159.1	169.6	6.2%	0.46	1.48	166
2007	2,838	982	180.2	189.3	4.8%	0.52	1.64	183
2008	2,878	996	155.8	170.5	8.6%	0.47	1.44	162
2009	2,907	1,006	150.1	168.7	11.0%	0.46	1.33	159
2010	2,936	1,016	128.0	150.6	15.0%	0.41	1.12	141
2011	2,991	1,035	130.8	161.3	18.9%	0.44	1.04	148
2012	3,127	1,082	159.7	187.8	15.0%	0.51	1.27	165
2013	3,511	1,215	163.2	179.9	9.3%	0.49	1.53	140
2014	3,844	1,330	155.0	180.1	13.9%	0.49	0.91	128
2015	4,032	1,395	159.7	178.6	10.6%	0.49	1.02	121
Avg. 2010-2015	**3,407**	**1,179**	**149.4**	**173.0**	**13.8%**	**0.47**	**1.15**	**140**

*WSS includes water for ice rinks, irrigation ponds, and hydrant flushing

Table 4 lists the top 10 water users by volume, from largest to smallest, for the City of Medina. All of these users are located within the Hamel system. The "Percent of Total" values listed were calculated as the percent of total water used by all three systems.

Table 4 – Large Volume Users

Customer	Category	Use (gallons per year)	Percent of Total Use (%)
Medina Ridge Condominium Assoc., Inc.	Residential	2,854,000	1.90
Polaris	Irrigation	2,213,000	1.47
Medina Golf & Country Club	Commercial	1,984,000	1.32
Medina Recreations Inc.	Commercial	1,934,000	1.28
Holiday Station	Commercial	1,684,000	1.12
Enclave Master Assn.	Irrigation	1,424,000	0.95
Medina Motor Inn	Commercial	1,294,000	0.86
Tolomatic, Inc.	Commercial	1,191,000	0.79
Wild Meadows HOA, Inc.	Irrigation	789,000	0.52
Rolling Greens Business	Irrigation	760,000	0.50

*Water usage data is from 2015

Existing Water Conservation Policies

Although Minnesotans benefit from the state's abundant water supplies, those supplies are finite and threats exist to the quality of our drinking water. Factors that can potentially limit water supply include: population increases, economic trends, uneven statewide availability of groundwater, climate change, and degraded water quality. There are many benefits to enacting water conservation policies and many practical, feasible objectives the City has already and will continue to pursue.

The average total water used per year by all three systems from 2010 to 2015 was 149.4 million gallons. The average residential per capita demand has been decreasing steadily since 2007; from 2010 to 2015 an average of 64 gallons per capita were used daily. This falls within the DNR's recommended residential demand of less than 75 gallons per capita per day.

The decrease in residential per capita demand was achieved through the implementation of several water conservation actions including changes in the water rate structure, distribution system improvements, and a new irrigation policy. The new irrigation policy implemented in 2008 prohibits the use of treated, potable water for irrigation in new developments.

Wellhead Protection and Potential Water Supply Issues

Long-term preventative programs and measures for the City's existing water system will help reduce the risk of emergency situations. The City of Medina has a number of programs to help reduce these risks.

The well pumps are critical to the systems supply and do wear out with time due to their extensive use. Public Works Operations staff checks pump oil, bearings, and packing each weekday. Staff changes the pump oil in the spring and fall of each year. Well pumps are annually inspected by a well contractor to ensure proper operation. The well functions inspected annually include voltage, flow rate, vibration, water level, and other maintenance issues. In addition, pumps are pulled and serviced, rebuilt, or replaced as necessary.

The City also has a Wellhead Protection Plan (WHPP) that was adopted in August of 2013 and is due to be updated in 2023. It lists the following objectives:

1. Create public awareness and general knowledge about the importance of WHPP for maintaining an adequate and safe drinking water supply in the Medina community and the City of Medina DWSMA.
2. Properly inventory and manage potential contaminant sources to protect the drinking water supply for the City of Medina.
3. Manage the Wellhead Management Zone to prevent contamination of the aquifer near the public supply wells.
4. Effectively track and report the implementation efforts and wellhead protection plan progress to all governing authorities.

In order to achieve these objectives, the WHPP lists the following measures to be implemented:

- Public Education and Outreach
    - Publish newsletter articles
    - Distribute informational mailings
    - Organize a booth at Celebration Day
    - Update the City of Medina website
- Potential Contamination Source Management
    - Collect well information
    - Apply for grant funds to seal unused wells
    - Seek funding to improve well inventory
    - Monitor potential contaminant sources
- Land Use Management
    - Identify the WHPP and DWSMA in land use maps
    - Request notice of land use permits within DWSMA
    - Adopt a WHPP ordinance regulating well installation within DWSMA

- Data Collection
    - Coordinate with MDH when planning new municipal wells
    - Update well inventory every 2.5 years
    - Video log municipal well casings
    - Coordinate with MDH on geochemical analysis of wells
    - Continue water level monitoring
- Inner Wellhead Management Zone (IWMZ)
    - Monitor and maintain 200 ft. setback radius around wells
    - Contact MDH regarding changes or construction of potential contaminant sources
    - Implement IWMZ PCSI Report measures
    - Update IWMZ Inventory for public water supply wells
- Reporting and Evaluation
    - Submit annual report on WHPP activities to City Council
    - Maintain a "WHPP folder"
    - Complete an Evaluation Report every 2.5 years
    - Complete a Summary Report to MDH in 2020
    - Complete annual DNR pumping permit reports and MDH Consumer Confidence Reports

Growth and Demand Projections

The City of Medina is currently developing and growing, although the projected trends vary across the three distinct areas within the water system. The projected populations and demands for these three communities are listed in Tables 5A-C (Tables 7a-c in the Water Supply Plan). Population served estimates were linearly extrapolated using Metropolitan Council growth estimates between 2020, 2030, and 2040. As of 2016, most new population growth will be serviced by the municipal water system, save some sparse rural development served by private wells.

With respect to the water system, it is expected that the vast majority of new development will occur in the Hamel system, which has the highest total per capita water demand. The City is also anticipating 160 new units of high density residential housing in the southwest corner of the City, but this area will be served by the Maple Plain water system.

The projected demand in the Hamel system was calculated by separately estimating the residential, commercial, WSS, and irrigation demands. The potable water demands (residential, commercial, and WSS) were summed and increased by 10% to approximate unmetered/unaccounted water. The projected max day demand was calculated by adding a flat amount to the average day demand rather than multiplying by a peak factor since the City's new irrigation policy prohibits the use of potable water for irrigation in new developments.

Since the irrigation water for some existing and all future development requires neither treatment nor storage, it is listed separately in Tables 5A-C. The peak factor applied to irrigation flows was calculated as the ratio of max day irrigation to average day irrigation over the months of May through October for 2010 to 2015. The max day irrigation was estimated as the difference between max day use and average day use for each year.

Table 5 – Projected Annual Water Demand

Table 5A – Hamel System

Population				Potable Demand					Irrigation Demand		Total
Year	City-wide Total Population	Projected Population Served	Projected Employ-ment	Residential Demand (GPCD)	Commercial Demand (GPCD)	WSS Demand (GPD)	Average Day Demand (MGD)	Max Day Demand (MGD)	Average Day Demand (MGD)	Max Day Demand (MGD)	Max Day Demand (MGD)
2016	6,094	3,624	4,042	68.3	13.9	73,700	0.42	1.06	0.28	0.91	1.97
2017	6,220	3,641	4,212	68.3	13.9	73,700	0.42	1.06	0.28	0.92	1.98
2018	6,347	3,658	4,381	68.3	13.9	73,700	0.42	1.07	0.28	0.92	1.99
2019	6,473	3,675	4,551	68.3	13.9	73,700	0.43	1.07	0.29	0.93	2.00
2020	6,600	3,692	4,720	68.3	13.9	73,700	0.43	1.07	0.29	0.93	2.00
2021	6,710	3,776	4,762	68.3	13.9	73,700	0.44	1.08	0.29	0.95	2.03
2022	6,820	3,861	4,804	68.3	13.9	73,700	0.44	1.09	0.30	0.97	2.06
2023	6,930	3,945	4,846	68.3	13.9	73,700	0.45	1.09	0.31	0.99	2.09
2024	7,040	4,030	4,888	68.3	13.9	73,700	0.46	1.10	0.31	1.01	2.12
2025	7,150	4,114	4,930	68.3	13.9	73,700	0.47	1.11	0.32	1.04	2.14
2030	7,700	4,536	5,140	68.3	13.9	73,700	0.50	1.14	0.35	1.14	2.29
2040	8,900	5,636	5,350	68.3	13.9	73,700	0.59	1.23	0.44	1.42	2.65

GPCD – Gallons per Capita per Day **GPD** – Gallons per Day **MGD** – Million Gallons per Day

The Independence Beach and Morningside areas are currently built out and do not expect to see significant growth in population. Total per capita demand in both of these communities has been steadily decreasing, likely due to the implementation of improved fixtures. The Metropolitan Council has projected that total per capita demand is projected to stay constant through 2040. Since the demands and populations in these communities are projected to stay constant, only one set of values is shown in the tables below for 2016 through 2040.

Table 5B – Independence Beach System

Population			Potable Demand					Irrigation Demand		Total
Year	Projected Population Served	Projected Employ-ment	Residential Demand (GPCD)	Commercial Demand (GPCD)	WSS Demand (GPD)	Average Day Demand (MGD)	Max Day Demand (MGD)	Average Day Demand (MGD)	Max Day Demand (MGD)	Max Day Demand (MGD)
2016-2040	448	-	47.2	-	3,721	0.027	0.046	0.0015	0.012	0.058

GPCD – Gallons per Capita per Day **GPD** – Gallons per Day **MGD** – Million Gallons per Day

Table 5C – Morningside System

Population			Potable Demand					Irrigation Demand		Total
Year	Projected Population Served	Projected Employ-ment	Residential Demand (GPCD)	Commercial Demand (GPCD)	WSS Demand (GPD)	Average Day Demand (MGD)	Max Day Demand (MGD)	Average Day Demand (MGD)	Max Day Demand (MGD)	Max Day Demand (MGD)
2016-2040	234	-	48.6	-	254	0.013	0.028	0.0015	0.015	0.044

GPCD – Gallons per Capita per Day **GPD** – Gallons per Day **MGD** – Million Gallons per Day

Future Water Conservation Policies

The Minnesota DNR has established eight water conservation objectives and strategies. These are listed below with comments on the City of Medina's progress towards the completion of each.

1. Reduce unaccounted (non-revenue) water loss to less than 10%.
    - The City's average unaccounted water use from 2010 to 2015 was 13.8%, which is higher than the recommended target of 10%. The City periodically monitors leaks in the distribution system and conducts water audits monthly in an effort to reduce this percentage. The City will also continue an ongoing meter repair and replacement program and continue to meter annual hydrant flushing.
    - The City has a total of about 1,500 metered connections which are monitored randomly every two years. The City will continue to use the results of these random tests to decide when it is necessary to replace meters in a given area.
2. Achieve residential demand of less than 75 gallons per capita per day.
    - The average residential per capita water demand for the City of Medina from 2010 to 2015 was 64 GPCD, which falls within this 75 GPCD target. Data from the DNR and the City indicates that residential water demand has steadily decreased over the last ten years.
    - In order to continue reducing residential demand, the City will review the ordinance on water efficient landscaping 1-3 years following implementation of this plan, will review the ordinance on water reuse annually, will revise the ordinance to limit irrigation 3-6 years following implementation of this plan, will continue to make water system improvements, will apply for the Metropolitan Council's water efficiency grant in 2017, will provide incentives to reduce outdoor water use annually, and will continue water conservation education and outreach.
3. Achieve at least a 15% reduction in per capita daily demand across all customer categories over the next 10 years.
    - The City will conduct water use audits annually at its facilities, will install enhanced water meters, will install conservation fixtures and appliances, will repair leaking system components, will investigate water reuse, will reduce outdoor water use, and will train new employees in water conservation.
4. Achieve a decreasing trend in total per capita demand.
    - A graph showing total per capita water demand by customer category is included in Appendix 8. The total per capita residential demand has been steadily decreasing since 2005 due to changes in the water rate structure. The total per capita commercial and irrigation demands do not exhibit a clear trend up or down; however, it is likely that the new irrigation policy will decrease these demands.

5. Reduce peak day demand so that the ratio of maximum to average day demand is less than 2.6.
    - The City's ten year average (2005-2014) ratio of maximum to average day demand is 2.4.
6. Implement a conservation water rate structure.
    - The water rates in Medina are based on an increasing block rate structure. This rate structure promotes water conservation because the price is volume-tiered, meaning that the price of water increases with the amount of gallons used. Furthermore, water billing in Medina is on a monthly schedule, which allows residents to be more aware of their water usage throughout the year. A copy of the 2016 water rates for Medina is included in Appendix 9.
    - The City has also implemented an odd/even watering restriction to reduce peak day demands during months of high water usage.
7. Additional strategies to reduce water use and support wellhead protection planning.
    - The City of Medina will consider participating in the GreenStep Cities program, will implement a water conservation outreach program, and will apply for grant funding to implement a rebate program.
8. Tracking success.
    - The City will continue to monitor water usage by customer category.

Regulation

The City of Medina has implemented several regulations to reduce demand and improve efficiency in its water system. Rainfall sensors continue to be required on landscape irrigation systems, potable water use for irrigation in new developments is restricted, water use is restricted by odd/even days during months of high water usage, and a critical water deficiency ordinance is in place. A summary of these regulations with links to more information on them is included in Appendix 10.

Retrofitting Programs

The City has several retrofitting programs in place to encourage conservation and efficiency. They have partnered with gas companies for the free distribution of low flow showerheads and faucet aerators, have partnered with the watershed organization to provide rebates for rain barrels and irrigation meters, and have implemented a ban on using potable water for irrigation in new developments.

Education and Outreach

The following education and outreach programs have been implemented by the City:

- Billing inserts include educational information
- Handouts and brochures distributed at Medina Celebration Days
- Consumer Confidence Reports prepared annually
- Community newsletters prepared every other month
- Information available at utility and public buildings
- Information available on City website (http://www.ci.medina.mn.us/)
- Water Treatment Facility Open Houses
- Ordinance notices in the event of an emergency

The City is looking into further educating residents on the benefits of water conservation with direct mailings and social media posts. The City is also looking into making programs to educate school age children on water resources and the importance of water conservation in their daily routines.

PROPOSED IMPROVEMENTS

The City of Medina's existing water system, in particular its existing elevated storage, does not have the capacity to satisfy projected demand through 2040. Table 6 lists the improvements proposed, along with their estimated dates of implementation and costs, in order to satisfy the City's anticipated demand. A map of the proposed improvements is included in Appendix 13. In addition, the City's Capital Improvements Plan for 2016-2020 is included in Appendix 4.

Table 6 – Proposed Capital Improvements

Year	Proposed Improvement	Estimated Cost
2017-2020	Upgrade Treatment Plant SCADA	TBD
	Install trunk water distribution mains	$460,000
2020-2030	Install additional 0.4 MG of elevated storage	$1,500,000
	Install trunk water distribution mains	$1,540,000
2030-2040	Expand the existing 2.0 MGD Treatment Plant to 3.0 MGD	$1,500,000
	Install trunk water distribution mains	$1,540,000

Computer Model

The City's existing and ultimate water system models were originally developed by Bonestroo (currently Stantec) in 2007. Since that time, some development has occurred and proposed developments and water demands have changed. Both the existing and ultimate water system models were updated to reflect actual existing system infrastructure and existing water system demands.

After updating the City's water system model, the ultimate water system model was evaluated to determine its ability to provide water at adequate domestic pressures and adequate fire flow rates. Adequate pressure standards were based on the Minnesota Department of Health (MDH) and 10 State Standards domestic pressure standards. Fire flow standards were based on International Building Code (IBC) standards, upon which Minnesota State Building Code is based.

Based on the revised ultimate water system demands, modeling results indicated that the City's proposed distribution system provides adequate capacity for serving existing and ultimate developments for domestic and fire protection purposes.

Proposed Sources and Treatment

It is recommended that the City's firm capacity, defined as its production capacity with its largest well out of service, satisfy its maximum day demand. The firm capacity of the Hamel system with Well 8 out of service is 2,550 gpm. The average maximum day demand in the Hamel system from 2010 to 2015 was 740 gpm. The maximum day demand is projected to grow through 2040 to a value of 1,840 gpm (including both potable and irrigation use). Both the current and projected maximum day demands are satisfied by the existing firm capacity; therefore, additional production capacity is not recommended at this time. However, if the City would like to treat the entire pumping capacity of Wells 4, 6, 7 and 8 simultaneously, it will need to expand the treatment capacity of the Water Treatment Plant from 2.0 MGD to 3.0 MGD.

Proposed Storage

From 2010 to 2015, the Hamel system's average daily demand was 0.43 MG; the Hamel system's current storage capacity is 0.60 MG. It is anticipated that the average daily demand for *potable* water in 2040 will be 0.59 MG. Although the average daily demand for potable water is not projected to surpass the City's current storage capacity by 2040, fire flow analysis based on existing ground and elevated storage indicates that an additional 195,000 gallons of elevated storage will be required by that time. However, to account for growth in demand and fire fighting capacity over the lifetime of the future tower, as well as some contingency for changes in future development trends, it is recommended that the City install an additional 400,000 gallons of elevated storage between 2020 and 2030. A 2012 update of the City's 2009 Comprehensive Water Plan evaluated three possible sites for additional elevated storage and recommended the Fields of Medina area; this is the site indicated on the map provided in Appendix 13.

The City's 2009 Comprehensive Water Plan and the 2012 Evaluation of that plan include discussion of the development and establishment of a high pressure zone in northwest Medina near the City of Loretto. It is recommended that this pressure zone be supplied by a booster station from the Hamel pressure zone until average day demand warrants a water tower there. Assuming that this future water tower will have a capacity 500,000 gallons, it should not be constructed until average day demand in that zone reaches 100,000 gpd, at which point mixers can keep the water in the tower from freezing. The high zone booster station, as well as new trunk water main, should be constructed as soon as development that requires City water occurs in that area. This development is not anticipated to occur before the year 2040.

Proposed Distribution

The City will need to expand its distribution network per the Future Land Use Plan for low density residential, mixed residential, commercial and general business areas in the northeast quadrant of Medina in the areas indicated on the map provided in Appendix 13. Because of the unpredictability of development, a definite schedule for the construction of trunk water main cannot be given at this time. However, the approximate costs based on the total estimated costs divided evenly through 2040 are provided in Table 5.

EMERGENCY PREPAREDNESS PROCEDURES

Water emergencies can occur as a result of vandalism, sabotage, accidental contamination, mechanical problems, power failures, drought, flooding, and other natural disasters. The purpose of emergency planning is to develop emergency response procedures and identify actions needed to improve emergency preparedness. In the case of a municipality, these procedures should be in support of, and part of, an all-hazard emergency operations plan.

Federal Emergency Response Plan

Section 1433(b) of the Safe Drinking Water Act as amended by the Public Health Security and Bioterrorism Preparedness and Response Act of 2002 (Public Law 107-188, Title IV – Drinking Water Security and Safety) requires community water suppliers serving over 3,300 people to prepare an Emergency Response Plan.

The City of Medina has a Federal Emergency Response Plan that was certified on September 24, 2015. The contacts for this plan are as follows:

Emergency Response Lead: Steve Scherer
Phone: (763) 473-8842
Email: steve.scherer@ci.medina.mn.us

Alternate Emergency Response Lead: Ed Belland
Phone: (612) 868-9244
Email: police@ci.medina.mn.us

Operational Contingency Plan

The State Department recommends that all utilities develop an operational contingency plan that describes measures to be taken for water supply mainline breaks and other common system failures, as well as for routine maintenance. The City of Medina's water utility currently has an operational contingency plan. In the case of an emergency, the City will request emergency action from the City Council and the Governor, including emergency demand reduction through the critical water deficiency ordinance. In the case of water contamination, bottled water would be distributed at public works. The City maintains an emergency contact list, included in Appendix 5.

Emergency Response Procedures

Quick access to concise and detailed information on water sources, water treatment, and the distribution system may be needed in an emergency. System operation and maintenance records should be maintained in secured central and back-up locations so that the records are accessible for emergency purposes. A detailed map of the system showing the water sources, treatment plant, storage facilities, supply lines, interconnections, and other information that would be useful in an emergency should also be readily available. It is critical that public water supplier representatives and emergency response

personnel communicate about the response procedures and be able to easily obtain this kind of information both in electronic and hard copy formats (in case of a power outage).

The City of Medina maintains records and maps of the water system. City staff can access these resources from a central secured location in the event of an emergency, and appropriate staff know where the resources are located.

Procedures for Augmenting Water Supplies

The City of Medina has several interconnections with neighboring water supply systems; however, these interconnections are limited by the segmented nature of the system's three distinct areas. One interconnection is between the City of Plymouth and the Hamel system, which has minimal pressures due to elevation differences between the two systems. The second interconnection is between the City of Maple Plain and the southwest corner of Medina. The third interconnection is between the City of Orono and the Morningside system. Copies of these cooperative agreements are included in Appendix 6. A fourth interconnection with the City of Corcoran is planned for 2017.

Allocation and Demand Reduction Procedures and Triggers

The City must prepare procedures to address gradual decreases in water supply, as well as emergencies and the sudden loss of water due to line breaks, power failures, sabotage, etc. These allocation and demand reduction procedures must be consistent with Minnesota State Statute 103G.261, that identifies and defines the priorities in which water usage will be allocated in the event of an emergency. They are defined as follows:

1. Domestic water supply only, excluding industrial and commercial uses of municipal water supply. The first priority also includes uses for power production that meet contingency requirements. Domestic use is defined by MN Rules 6115.0630, Subp. 9, as use for general household purposes for human needs such as cooking, cleaning, drinking, washing, and waste disposal, and uses for on-farm livestock watering excluding commercial livestock operations which use more than 10,000 gallons per day or one million gallons per year.
2. Consumption of less than 10,000 gallons per day.
3. Agricultural irrigation and processing of agricultural products of more than 10,000 gallons per day.
4. Power production in excess of the use provided for in the contingency plan.
5. All other water use of more than 10,000 gallons per day.
6. Non-essential uses. These uses are defined by Minnesota Statutes 103G.291 as lawn sprinkling, vehicle washing, golf course and park irrigation, and other non-essential uses.

Table 7 lists the priority ranking, average day demand, and demand reduction potential for each customer category in the City.

Table 7 – Water Use Priorities

Customer Category	Allocation Priority	Average Day Demand (GPD)*	Short-Term Emergency Demand Reduction Potential (GPD)**
Residential	1	217,000	75,000
Commercial	2	59,000	11,000
Irrigation/Other	3	106,000	105,000
Total		382,000	191,000

GPD – Gallons per Day

*Average daily demands were calculated using average 2010-2015 water use data summed across the Hamel, Independence Beach, and Morningside systems.

**Short-term emergency demand reduction potential was calculated as the difference between maximum use (summer demand) and base use (winter demand).

The City of Medina will use the following conditions to trigger an emergency response:

- Contamination
- Loss of Production
- Infrastructure Failure
- Governor's Executive Order

The City of Medina has identified the following short-term and long-term actions to be implemented as part of an emergency response:

Short-term Actions

- Enforce its critical water deficiency ordinance
- Allocate water through emergency action of the City Council
- Encourage voluntary reduction through public service announcements

Long-term Actions

- Supply augmentation through interconnections
- Enforce its critical water deficiency ordinance
- Allocate water through emergency action of the City Council
- Meet with large water users to discuss their contingency plan

Notification Procedures

The City of Medina has developed the following plan to inform customers regarding conservation requests, water use restrictions, and suspensions; with the support of City staff, neighboring communities, and local news outlets:

Short-term demand reduction declared (within one year)	Long-term demand reduction declared (over one year)	Governor's Critical water deficiency declared
Frequency: Monthly	Frequency: Monthly	Frequency: As Needed
▪ Website ▪ Social media (e.g. Twitter, Facebook) ▪ Direct customer mailing ▪ Press release (TV, radio, newspaper)	▪ Website ▪ Social media (e.g. Twitter, Facebook) ▪ Direct customer mailing ▪ Press release (TV, radio, newspaper)	▪ Website ▪ Social media (e.g. Twitter, Facebook) ▪ Press release (TV, radio, newspaper)

Enforcement

Minnesota Statutes require public water supply authorities to adopt and enforce water conservation restrictions during periods of critical water shortages. As stated in Minnesota Statutes 103G.291, Subdivision 1, regarding public water supply appropriation during deficiency, if the governor determines and declares by executive order that there is a critical water deficiency, public water supply authorities appropriating water must adopt and enforce water conservation restrictions within their jurisdiction that are consistent with rules adopted by the commissioner. The restrictions must limit lawn sprinkling, vehicle washing, golf course and park irrigation, and other nonessential uses, and have appropriate penalties for failure to comply with the restrictions.

The City has a critical water deficiency ordinance defined in Medina City Code, Chapter 7: Section 710.69. A copy of this ordinance is included in Appendix 7. The City has authorized the Public Works Director and the City Administrator, or their designee, to have standing authority to implement water restrictions which improves response times for dealing with water emergencies.

Local Water Supply Plan Template
Third Generation for 2016-2018

Formerly called Water Emergency & Water Conservation Plan

Cover photo by Molly Shodeen

For more information on this Water Supply Plan Template, please contact the DNR Division of Ecological and Water Resources at (651) 259-5034 or (651) 259-5100.

This information is available in an alternative format upon request.

Equal opportunity to participate in and benefit from programs of the Minnesota Department of Natural Resources is available to all individuals regardless of race, color, creed, religion, national origin, sex, marital status, public assistance status, age, sexual orientation, disability or activity on behalf of a local human rights commission. Discrimination inquiries should be sent to Minnesota DNR, 500 Lafayette Road, St. Paul, MN 55155-4049; or the Equal Opportunity Office, Department of the Interior, Washington, DC 20240.

Table of contents

DEPARTMENT OF NATURAL RESOURCES – DIVISION OF ECOLOGICAL AND WATER RESOURCES AND METROPOLITAN COUNCIL

INTRODUCTION TO WATER SUPPLY PLANS (WSP)

Who needs to complete a Water Supply Plan

Public water suppliers serving more than 1,000 people, and large private water suppliers in designated Groundwater Management Areas, and all water suppliers in the Twin Cities metropolitan area, are required to prepare and submit a water supply plan.

The goal of the WSP is to help water suppliers: 1) implement long term water sustainability and conservation measures; and 2) develop critical emergency preparedness measures. Your community needs to know what measures will be implemented in case of a water crisis. A lot of emergencies can be avoided or mitigated if long term sustainability measures are implemented.

Groundwater Management Areas (GWMA)

The DNR has designated three areas of the state as Groundwater Management Areas (GWMAs) to focus groundwater management efforts in specific geographies where there is an added risk of overuse or water quality degradation. A plan directing the DNRs actions within each GWMA has been prepared. Although there are no specific additional requirements with respect to the water supply planning for communities within designated GWMAs, communities should be aware of the issues and actions planned if they are within the boundary of one of the GWMAs. The three GWMAs are the North and East Metro GWMA (Twin Cities Metro), the Bonanza Valley GWMA and the Straight River GWMA (near Park Rapids). Additional information and maps are included in the DNR webpage at http://www.dnr.state.mn.us/gwmp/areas.html

Benefits of completing a WSP

Completing a WSP using this template, fulfills a water supplier's statutory obligations under M.S. M.S.103G.291 to complete a water supply plan. For water suppliers in the metropolitan area, the WSP will help local governmental units to fulfill their requirements under M.S. 473.859 to complete a local comprehensive plan. Additional benefits of completing WSP template:

- The standardized format allows for quicker and easier review and approval
- Help water suppliers prepare for droughts and water emergencies.
- Create eligibility for funding requests to the Minnesota Department of Health (MDH) for the Drinking Water Revolving Fund.
- Allow water suppliers to submit requests for new wells or expanded capacity of existing wells.
- Simplify the development of county comprehensive water plans and watershed plans.
- Fulfill the contingency plan provisions required in the MDH wellhead protection and surface water protection plans.
- Fulfill the demand reduction requirements of Minnesota Statutes, section 103G.291 subd 3 and 4.

- Upon implementation, contribute to maintaining aquifer levels, reducing potential well interference and water use conflicts, and reducing the need to drill new wells or expand system capacity.
- Enable DNR to compile and analyze water use and conservation data to help guide decisions.
- Conserve Minnesota's water resources

If your community needs assistance completing the Water Supply Plan, assistance is available from your area hydrologist or groundwater specialist, the MN Rural Waters Association circuit rider program, or in the metropolitan area from Metropolitan Council staff. Many private consultants are also available.

WSP Approval Process

10 Basic Steps for completing a 10-Year Water Supply Plan

1. Download the DNR/Metropolitan Council Water Supply Plan Template www.mndnr.gov/watersupplyplans
2. Save the document with a file name with this naming convention: WSP_cityname_permitnumber_date.doc.
3. The template is a form that should be completed electronically.
4. Compile the required water use data (Part 1) and emergency procedures information (Part 2)
5. The Water Conservation section (Part 3) may need discussion with the water department, council, or planning commission, if your community does not already have an active water conservation program.
6. Communities in the seven-county Twin Cities metropolitan area should complete all the information discussed in Part 4. The Metropolitan Council has additional guidance information on their webpage http://www.metrocouncil.org/Handbook/Plan-Elements/Water-Resources/Water-Supply.aspx. All out-state water suppliers do *not* need to complete the content addressed in Part 4.
7. Use the Plan instructions and Checklist document to insure all data is complete and attachments are included. This will allow for a quicker approval process. www.mndnr.gov/watersupplyplans
8. Plans should be submitted electronically – no paper documents are required. https://webapps11.dnr.state.mn.us/mpars/public/authentication/login
9. DNR hydrologist will review plans (in cooperation with Metropolitan Council in Metro area) and approve the plan or make recommendations.
10. Once approved, communities should complete a Certification of Adoption form, and send a copy to the DNR.

Complete Table 1 with information about the public water supply system covered by this WSP.

Table 1. General information regarding this WSP

Requested Information	Description
DNR Water Appropriation Permit Number(s)	1960-0424; 1976-6007; 1976-6030
Ownership	Public
Metropolitan Council Area	Yes – Hennepin County
Street Address	2052 County Road 24
City, State, Zip	Medina, MN 55340
Contact Person Name	Steve Scherer
Title	Public Works Director
Phone Number	(763) 473-8842
MDH Supplier Classification	Municipal

PART 1. WATER SUPPLY SYSTEM DESCRIPTION AND EVALUATION

The first step in any water supply analysis is to assess the current status of demand and availability. Information summarized in Part 1 can be used to develop Emergency Preparedness Procedures (Part 2) and the Water Conservation Plan (Part 3). This data is also needed to track progress for water efficiency measures.

A. Analysis of Water Demand

Complete Table 2 showing the past 10 years of water demand data.

- Some of this information may be in your Wellhead Protection Plan.
- If you do not have this information, do your best, call your engineer for assistance or if necessary leave blank.

If your customer categories are different than the ones listed in Table 2, please describe the differences below:

The City of Medina operates three independent municipal water systems: Hamel (north), Independence Beach (west), and Morningside (south). The remaining population is served by private wells, Maple Plain or Orono. In 2014, the City began estimating water used for hydrant flushing and water lost due to watermain breaks.

Table 2. Historic water demand (see definitions in the glossary after Part 4 of this template)

Table 2a, 1960-0424: Morningside System

Year	Pop. Served	Total Residential Connections	Residential Water Delivered (MG)	Irrigation Water Delivered (MG)	WSS* (MG)	Additional - Breaks (MG)	Total Water Delivered (MG)	Total Water Pumped (MG)	Percent Unmetered/ unaccounted	Average Daily Demand (MGD)	Max Daily Demand (MG)	Date of Max. Demand	Residential Per Capita Demand (GPCD)	Total per capita Demand (GPCD)
2005	231	80	5.63	0.00	-	-	5.63	5.89	4.36%	0.016	0.040	N/A	66.77	69.82
2006	231	80	8.30	0.00	-	-	8.30	6.21	-	0.017	0.040	N/A	98.44	73.63
2007	234	81	6.20	0.00	-	-	6.20	7.82	20.68%	0.021	0.050	N/A	72.59	91.51
2008	234	81	4.96	0.00	-	-	4.96	6.69	25.85%	0.018	0.090	N/A	58.07	78.32
2009	234	81	5.34	0.00	-	-	5.34	6.81	21.61%	0.019	0.091	8/3/2009	62.50	79.73
2010	234	81	4.91	0.04	-	-	4.95	5.44	9.02%	0.015	0.032	5/31/2010	57.45	63.68
2011	234	81	4.65	0.13	-	-	4.79	5.24	8.77%	0.014	0.027	9/12/2011	54.48	61.41
2012	234	81	5.01	0.24	-	-	5.25	5.66	7.26%	0.016	0.039	7/18/2012	58.62	66.27
2013	234	81	4.73	0.03	0.02	0.11	4.88	5.17	5.54%	0.014	0.027	9/9/2013	55.36	60.49
2014	234	81	2.99	1.30	0.07	0.23	4.59	5.21	12.02%	0.014	0.024	8/8/2014	34.96	61.04
2015	234	81	2.64	1.55	0.12	0.00	4.31	4.69	8.19%	0.013	0.036	5/8/2015	30.94	54.90
Avg. 2010-2015	234	81	4.15	0.55	0.05	0.06	4.79	5.24	8.56%	0.014	0.031		48.64	61.30

*WSS includes water for ice rinks, irrigation ponds, and hydrant flushing

Table 2b, 1976-6030: Independence Beach System

Year	Pop. Served	Total Residential Connections	Residential Water Delivered (MG)	Irrigation Water Delivered (MG)	WSS* (MG)	Additional – Breaks (MG)	Total Water Delivered (MG)	Total Water Pumped (MG)	% Unmetered/ unaccounted	Average Daily Demand (MGD)	Max Daily Demand (MG)	Date of Max. Demand	Residential Per Capita Demand (GPCD)	Total per capita Demand (GPCD)
2005	445	154	11.70	0.00	-	-	11.70	13.26	11.74%	0.04	0.118	N/A	72.03	81.61
2006	445	154	11.10	0.00	-	-	11.10	16.41	32.34%	0.04	0.152	N/A	68.34	101.01
2007	445	154	12.40	0.00	-	-	12.40	14.57	14.88%	0.04	0.103	N/A	76.34	89.68
2008	445	154	11.10	0.00	-	-	11.10	14.35	22.64%	0.04	0.177	N/A	68.34	88.34
2009	448	155	10.17	0.10	-	-	10.26	13.64	24.76%	0.04	0.231	7/13/2009	62.18	83.41
2010	448	155	8.55	0.41	-	-	8.96	11.19	19.87%	0.03	0.073	5/31/2010	52.30	68.41
2011	448	155	8.38	0.41	-	-	8.79	11.49	23.51%	0.03	0.054	7/11/2011	51.23	70.25
2012	448	155	8.83	0.60	-	-	9.43	12.10	22.03%	0.03	N/A	7/18/2012	54.00	73.99
2013	448	155	8.20	0.43	1.38	0.01	10.01	10.91	8.29%	0.03	0.061	8/29/2013	50.12	66.72
2014	448	155	6.09	0.56	1.37	0.00	8.01	10.46	23.41%	0.03	0.045	8/8/2014	37.24	63.98
2015	448	155	6.22	0.80	1.33	0.10	8.44	11.23	24.79%	0.03	0.051	4/10/2015	38.02	68.66
Avg. 2010-2015	448	155	7.71	0.53	0.68	0.02	8.94	11.23	20.32%	0.03	0.057		47.15	68.67

*WSS includes water for ice rinks, irrigation ponds, and hydrant flushing

Table 2c, 1983-6007: Hamel System

Year	Pop. Served	Total Connections	Residential Water Delivered (MG)	Commercial Water Delivered (MG)	Irrigation Water Delivered (MG)	WSS* (MG)	Additional - Breaks (MG)	Total Water Delivered (MG)	Total Water Pumped (MG)	% Unmetered/ unaccounted	Average Daily Demand (MGD)	Max Daily Demand (MG)	Date of Max. Demand	Residential Per Capita Demand (GPCD)	Total per capita Demand (GPCD)
2005	2,092	724	75.32	26.62	7.57	-	-	109.51	117.40	6.72%	0.32	0.97	N/A	108.32	168.84
2006	2,124	735	101.57	29.08	9.01	-	-	139.66	146.95	4.96%	0.40	1.28	N/A	139.91	202.42
2007	2,159	747	112.48	37.11	12.04	-	-	161.63	166.94	3.18%	0.46	1.49	N/A	147.94	219.58
2008	2,199	761	102.78	27.96	8.97	-	-	139.71	149.41	6.49%	0.41	1.17	N/A	133.08	193.45
2009	2,225	770	90.73	21.32	22.41	-	-	134.45	148.21	9.28%	0.41	1.01	6/2/2009	128.92	210.61
2010	2,254	780	64.79	19.22	30.06	-	-	114.07	134.01	14.88%	0.37	1.02	5/31/2010	93.33	193.04
2011	2,309	799	63.69	19.50	34.04	-	-	117.23	144.52	18.89%	0.40	0.96	9/14/2011	90.50	205.37
2012	2,445	846	70.72	20.78	53.50	-	-	145.00	170.00	14.71%	0.47	1.24	7/13/2012	94.14	226.32
2013	2,829	979	65.89	21.97	52.88	6.97	0.66	148.36	163.82	9.44%	0.45	1.44	8/29/2013	74.01	184.02
2014	3,162	1094	65.12	23.04	25.19	25.92	3.16	142.43	164.38	13.35%	0.45	0.84	8/6/2014	48.31	121.95
2015	3,350	1,159	68.45	22.85	27.29	27.85	0.52	146.96	162.73	9.69%	0.45	0.94	8/6/2015	63.57	151.13
Avg. 2010-2015	2,725	943	66.44	21.23	37.16	10.12	0.72	135.67	156.58	13.49%	0.43	1.07		77.31	180.31

*WSS includes water for WTP backwash, ice rink, irrigation pond, and hydrant flushing

Table 2d, Total Medina System (Morningside + Independence Beach + Hamel)

Year	Pop. Served	Total Residential Connections	Residential Water Delivered (MG)	C/I/I* Water Delivered (MG)	WSS** (MG)	Additional - Breaks (MG)	Total Water Delivered (MG)	Total Water Pumped (MG)	% Unmetered/ unaccounted	Average Daily Demand (MGD)	Max Daily Demand (MG)	Date of Max. Demand	Residential Per Capita Demand (GPCD)	Total per capita Demand (GPCD)
2005	2,768	958	92.65	34.19	-	-	126.84	136.54	7.11%	0.37	1.12	N/A	91.70	135.15
2006	2,800	969	120.97	38.09	-	-	159.06	169.57	6.20%	0.46	1.48	N/A	118.37	165.92
2007	2,838	982	131.08	49.15	-	-	180.23	189.32	4.80%	0.52	1.64	N/A	126.54	182.77
2008	2,878	996	118.84	36.93	-	-	155.77	170.45	8.61%	0.47	1.44	N/A	113.13	162.26
2009	2,907	1,006	106.23	43.82	-	-	150.05	168.66	11.03%	0.46	1.33	N/A	100.12	158.95
2010	2,936	1,016	78.25	49.74	-	-	127.99	150.64	15.04%	0.41	1.12	N/A	73.02	140.57
2011	2,991	1,035	76.72	54.08	-	-	130.80	161.26	18.89%	0.44	1.04	N/A	70.27	147.71
2012	3,127	1,082	84.55	75.13	-	-	159.68	187.76	14.96%	0.51	1.27	N/A	74.08	164.51
2013	3,511	1,215	78.81	75.31	8.36	0.77	163.25	179.90	9.25%	0.49	1.53	N/A	61.50	140.38
2014	3,844	1,330	74.20	50.08	27.36	3.39	155.03	180.05	13.90%	0.49	0.91	N/A	52.88	128.33
2015	4,032	1,395	77.31	52.48	29.30	0.62	159.71	178.65	10.60%	0.49	1.02	N/A	52.53	121.39
Avg. 2010-2015	3,407	1,179	78.31	59.47	10.84	0.80	149.41	173.04	13.77%	0.47	1.15		64.05	140.48

*C/I/I also includes irrigation only meters; **WSS includes water for WTP backwash, ice rinks, irrigation ponds, and hydrant flushing

Complete Table 3 by listing the top 10 water users by volume, from largest to smallest. For each user, include information about the category of use (residential, commercial, industrial, institutional, or wholesale), the amount of water used in gallons per year, the percent of total water delivered, and the status of water conservation measures.

Table 3. Large volume users

Customer	Use Category (Residential, Industrial, Commercial, Institutional, Wholesale)	Amount Used (Gallons per Year)*	Percent of Total Annual Water Delivered	Implementing Water Conservation Measures? (Yes/No/Unknown)
Medina Ridge Condominium assn. Inc	Residential	2,854,000	1.90	Unknown
Polaris	Irrigation	2,213,000	1.47	Unknown
Medina Golf & Country Club	Commercial	1,984,000	1.32	Unknown
Medina Recreations Inc.	Commercial	1,934,000	1.28	Unknown
Holiday Station	Commercial	1,684,000	1.12	Unknown
Enclave Master Assn.	Irrigation	1,424,000	0.95	Unknown
Medina Motor Inn	Commercial	1,294,000	0.86	Unknown
Tolomatic, Inc.	Commercial	1,191,000	0.79	Unknown
Wild Meadows HOA, Inc.	Irrigation	789,000	0.52	Unknown
Rolling Greens Business	Irrigation	760,000	0.50	Unknown

*Water usage data is from 2015

B. Treatment and Storage Capacity

Complete Table 4 with a description of where water is treated, the year treatment facilities were constructed, water treatment capacity, the treatment methods (i.e. chemical addition, reverse osmosis, coagulation, sedimentation, etc.) and treatment types used (i.e. fluoridation, softening, chlorination, Fe/MN removal, coagulation, etc.). Also describe the annual amount and method of disposal of treatment residuals. Add rows to the table as needed.

Table 4. Water treatment capacity and treatment processes

Treatment Site ID (Plant Name or Well ID)	Year Constructed	Treatment Capacity (GPD)	Treatment Method	Treatment Type	Annual Amount of Residuals	Disposal Process for Residuals	Do You Reclaim Filter Backwash Water?
Hamel Water Treatment Plant	2006	2,000,000 *	Chemical addition, gravity filtration,	Gravity filtration, chlorination, fluoridation.		Backwash media goes to sanitary system	No**
Independence Beach 1	1975	864,000	Chemical addition	Chlorination, fluoridation, and addition of polyphosphate	N/A	N/A	N/A
Independence Beach 2	1988	201,600	Chemical addition	Chlorination, fluoridation, and addition of	N/A	N/A	N/A

Treatment Site ID (Plant Name or Well ID)	Year Constructed	Treatment Capacity (GPD)	Treatment Method	Treatment Type	Annual Amount of Residuals	Disposal Process for Residuals	Do You Reclaim Filter Backwash Water?
				polyphosphate			
Morningside 1	1961	129,600	Chemical addition	Chlorination, fluoridation, and addition of polyphosphate	N/A	N/A	N/A
Morningside 2	1960	216,000	Chemical addition	Chlorination, fluoridation, and addition of polyphosphate	N/A	N/A	N/A
Total	NA	4,411,200	NA	NA		NA	

*Treatment facility is expandable to 3.0 MGD; ** Treatment plant is set up for reclaim, however because of water quality issues, water has not been reclaimed for the last few years

Complete Table 5 with information about storage structures. Describe the type (i.e. elevated, ground, etc.), the storage capacity of each type of structure, the year each structure was constructed, and the primary material for each structure. Add rows to the table as needed.

Table 5. Storage capacity, as of the end of the last calendar year

Structure Name	Type of Storage Structure	Year Constructed	Primary Material	Storage Capacity (Gallons)
Hamel Water Tower	Elevated storage	1988	Steel	400,000
Water Treatment Plant Clearwell	Clearwell	2006	Concrete	200,000
Total	n/a	n/a	n/a	600,000

Treatment and storage capacity versus demand

It is recommended that total storage equal or exceed the average daily demand.

Discuss the difference between current storage and treatment capacity versus the water supplier's projected average water demand over the next 10 years (see Table 7 for projected water demand):

From 2010 to 2015, the Hamel system's average daily demand was 0.43 MG; the City's current storage capacity is 0.60 M. It is anticipated that the highest average daily demand for *potable* water through the year 2040 will be 0.59 MG, which is within the City's current storage capacity. However, it is likely that the City will require additional storage in the Hamel System between 2020 and 2030 in order to provide adequate fire flows. It is generally recommended that the City's treatment or production capacity be equal to the maximum day demand with the largest well out of service (firm capacity). The Hamel system's projected maximum day demand for water (both potable and irrigation) in the year 2040 is 2.65 MG, while the firm capacity is 3.53 MG.

C. Water Sources

Complete Table 6 by listing all types of water sources that supply water to the system, including groundwater, surface water, interconnections with other water suppliers, or others. Provide the name of each source (aquifer name, river or lake name, name of interconnecting water supplier) and the Minnesota unique well number or intake ID, as appropriate. Report the year the source was installed or established and the current capacity. Provide information about the depth of all wells. Describe the

status of the source (active, inactive, emergency only, retail/wholesale interconnection) and if the source facilities have a dedicated emergency power source. Add rows to the table as needed for each installation.

Include copies of well records and maintenance summary for each well that has occurred since your last approved plan in **Appendix 1.**

Table 6. Water sources and status

Resource Type (Groundwater, Surface water, Interconnection)	Resource Name	MN Unique Well # or Intake ID	Year Installed	Capacity (Gallons per Minute)	Well Depth (Feet)	Status of Normal and Emergency Operations (active, inactive, emergency only, retail/wholesale interconnection))	Does this Source have a Dedicated Emergency Power Source? (Yes or No) *
Groundwater	QBAA	MS-1 208009	1961	90	205	Active	
Groundwater	QBAA	MS-2 223378	1960	175	204	Active	
Groundwater	QBAA	IB -1 100219	1975	500	240	Active	
Groundwater	QBAA	IB-2 448765	1988	150	241	Active	
Groundwater	CSTLCIGL	Hamel 2 158087	1978	150	601	Reserve/Emergency	
Groundwater	CFRNCIGL	Hamel 3 122239	1983	150	590	Reserve/Emergency	
Groundwater	CMTS	Hamel 4 520048	1993	800	770	Active	
Groundwater	QWTA	Hamel 5 709925	2004	300	240	Active	
Groundwater	CJDN	Hamel 6 747666	2007	400	378	Active	
Groundwater	CJDN	Hamel 7 759809	2008	800	405	Active	
Groundwater	QBAA	Hamel 8 814752	2016	800	398	Active	
Interconnection	Plymouth		n/a	n/a		Emergency Only	No
Interconnection	Orono		n/a	n/a		Emergency Only	No
Interconnection	Maple Plain		n/a	n/a		Emergency Only	No
*Wells in the Morningside and Independence Beach Systems have transfer switches and are wired for portable generators.							

Limits on Emergency Interconnections

Discuss any limitations on the use of the water sources (e.g. not to be operated simultaneously, limitations due to blending, aquifer recovery issues etc.) and the use of interconnections, including capacity limits or timing constraints (i.e. only 200 gallons per minute are available from the City of Prior Lake, and it is estimated to take 6 hours to establish the emergency connection). If there are no limitations, list none.

The City has an interconnection with the City of Plymouth at Brockton Lane. However, this is for emergency use only due to elevation differences between systems. The City also has an interconnection with Orono for the Morningside system. The City of Maple Plain supplies the southwest corner of the City.

D. Future Demand Projections – *Key Metropolitan Council Benchmark*

Water Use Trends

Use the data in Table 2 to describe trends in 1) population served; 2) total per capita water demand; 3) average daily demand; 4) maximum daily demand. Then explain the causes for upward or downward trends. For example, over the ten years has the average daily demand trended up or down? Why is this occurring?

For the Hamel system, there is an increasing trend seen in the population served because the City is currently seeing new development. Although the Hamel system is seeing growth, there are no trends in total per capita demand, average daily demand, or maximum daily demand.
The Independence Beach and Morningside systems are currently built out, therefore no trend is seen in population served or average daily demand. For both systems, there is a decreasing trend in total per capita water demand and maximum daily demand. The decreasing trend is likely due to the implementation of improved fixtures.
It is likely that rainfall and climate play a much larger role in the difference in water usage than any other factor, as more water is used during hot summer days/evenings.

Use the water use trend information discussed above to complete Table 7 with projected annual demand for the next ten years. Communities in the seven-county Twin Cities metropolitan area must also include projections for 2030 and 2040 as part of their local comprehensive planning.

Projected demand should be consistent with trends evident in the historical data in Table 2, as discussed above. Projected demand should also reflect state demographer population projections and/or other planning projections.

Table 7. Projected annual water demand – Hamel System

Table 7a. Hamel System

	Population			Potable Demand					Irrigation Demand		Total
Year	City-wide Total Population	Projected Population Served	Projected Employment	Residential Demand (GPCD)	Commercial Demand (GPCD)	WSS Demand (GPD)	Average Day Demand (MGD)	Max Day Demand (MGD)	Average Day Demand (MGD)	Max Day Demand (MGD)	Max Day Demand (MGD)
2016	6,094	3,624	4,042	68.3	13.9	73,700	0.42	1.06	0.28	0.91	1.97
2017	6,220	3,641	4,212	68.3	13.9	73,700	0.42	1.06	0.28	0.92	1.98
2018	6,347	3,658	4,381	68.3	13.9	73,700	0.42	1.07	0.28	0.92	1.99
2019	6,473	3,675	4,551	68.3	13.9	73,700	0.43	1.07	0.29	0.93	2.00
2020	6,600	3,692	4,720	68.3	13.9	73,700	0.43	1.07	0.29	0.93	2.00
2021	6,710	3,776	4,762	68.3	13.9	73,700	0.44	1.08	0.29	0.95	2.03
2022	6,820	3,861	4,804	68.3	13.9	73,700	0.44	1.09	0.30	0.97	2.06
2023	6,930	3,945	4,846	68.3	13.9	73,700	0.45	1.09	0.31	0.99	2.09
2024	7,040	4,030	4,888	68.3	13.9	73,700	0.46	1.10	0.31	1.01	2.12
2025	7,150	4,114	4,930	68.3	13.9	73,700	0.47	1.11	0.32	1.04	2.14
2030	7,700	4,536	5,140	68.3	13.9	73,700	0.50	1.14	0.35	1.14	2.29
2040	8,900	5,636	5,350	68.3	13.9	73,700	0.59	1.23	0.44	1.42	2.65

GPCD – Gallons per Capita per Day **MGD** – Million Gallons per Day

Table 7b. Independence Beach System

	Population			Potable Demand					Irrigation Demand		Total
Year	City-wide Total Population	Projected Population Served	Projected Employment	Residential Demand (GPCD)	Commercial Demand (GPCD)	WSS Demand (GPD)	Average Day Demand (MGD)	Max Day Demand (MGD)	Average Day Demand (MGD)	Max Day Demand (MGD)	Max Day Demand (MGD)
2016	6,094	448	-	47.2	-	3,721	0.027	0.046	0.0015	0.012	0.058
2017	6,220	448	-	47.2	-	3,721	0.027	0.046	0.0015	0.012	0.058
2018	6,347	448	-	47.2	-	3,721	0.027	0.046	0.0015	0.012	0.058
2019	6,473	448	-	47.2	-	3,721	0.027	0.046	0.0015	0.012	0.058
2020	6,600	448	-	47.2	-	3,721	0.027	0.046	0.0015	0.012	0.058
2021	6,710	448	-	47.2	-	3,721	0.027	0.046	0.0015	0.012	0.058
2022	6,820	448	-	47.2	-	3,721	0.027	0.046	0.0015	0.012	0.058
2023	6,930	448	-	47.2	-	3,721	0.027	0.046	0.0015	0.012	0.058
2024	7,040	448	-	47.2	-	3,721	0.027	0.046	0.0015	0.012	0.058
2025	7,150	448	-	47.2	-	3,721	0.027	0.046	0.0015	0.012	0.058
2030	7,700	448	-	47.2	-	3,721	0.027	0.046	0.0015	0.012	0.058
2040	8,900	448	-	47.2	-	3,721	0.027	0.046	0.0015	0.012	0.058

GPCD – Gallons per Capita per Day **MGD** – Million Gallons per Day

Table 7c. Morningside System

	Population			Potable Demand					Irrigation Demand		Total
Year	City-wide Total Population	Projected Population Served	Projected Employment	Residential Demand (GPCD)	Commercial Demand (GPCD)	WSS Demand (GPD)	Average Day Demand (MGD)	Max Day Demand (MGD)	Average Day Demand (MGD)	Max Day Demand (MGD)	Max Day Demand (MGD)
2016	6,094	234	-	48.6	-	254	0.013	0.028	0.0015	0.015	0.044
2017	6,220	234	-	48.6	-	254	0.013	0.028	0.0015	0.015	0.044
2018	6,347	234	-	48.6	-	254	0.013	0.028	0.0015	0.015	0.044
2019	6,473	234	-	48.6	-	254	0.013	0.028	0.0015	0.015	0.044
2020	6,600	234	-	48.6	-	254	0.013	0.028	0.0015	0.015	0.044
2021	6,710	234	-	48.6	-	254	0.013	0.028	0.0015	0.015	0.044
2022	6,820	234	-	48.6	-	254	0.013	0.028	0.0015	0.015	0.044
2023	6,930	234	-	48.6	-	254	0.013	0.028	0.0015	0.015	0.044
2024	7,040	234	-	48.6	-	254	0.013	0.028	0.0015	0.015	0.044
2025	7,150	234	-	48.6	-	254	0.013	0.028	0.0015	0.015	0.044
2030	7,700	234	-	48.6	-	254	0.013	0.028	0.0015	0.015	0.044
2040	8,900	234	-	48.6	-	254	0.013	0.028	0.0015	0.015	0.044

GPCD – Gallons per Capita per Day **MGD** – Million Gallons per Day

Projection Method

Describe the method used to project water demand, including assumptions for population and business growth and how water conservation and efficiency programs affect projected water demand:

The Metropolitan Council's projected populations served in 2020, 2030, and 2040 were used to calculate the projected increase in population in each decade. These increases in population served were applied to the Hamel system, and the populations in the intervening years were linearly extrapolated. The populations served in the Independence Beach and Morningside systems were projected to remain constant. The per capita demands (daily average) were obtained from the City's annual water usage data. Due to the City's irrigation policy that restricts the use of potable water for irrigation in new developments, it is anticipated that new developments will not have seasonal fluctuations in water use. The projected maximum daily demands were calculated by determining the difference between maximum and average daily demands. This value was then added to the projected average daily demands through 2040. This method in calculating the maximum daily demands assumes that developments that are currently connected to the system will continue to use a greater quantity of water in the summer, but future developments will not.

Since the populations served by the Morningside and Independence Beach Systems are projected to remain the same through 2040, there is no increase in projected water use for these areas.

E. Resource Sustainability

Monitoring – *Key DNR Benchmark*

Complete Table 8 by inserting information about source water quality monitoring efforts. The list should include all production wells, observation wells, and source water intakes or reservoirs. Additional information on groundwater level monitoring program at: http://www.dnr.state.mn.us/waters/groundwater_section/obwell/index.html Add rows to the table as needed.

Table 8. Information about source water quality and quantity monitoring

MN Unique Well # or Surface Water ID	Type of monitoring point	Monitoring program	Frequency of monitoring	Monitoring Method
Hamel 3 122239	☑ production well ☐ observation well ☐ source water intake ☐ source water reservoir	☐Routine MDH sampling ☑Routine water utility sampling ☐ other	☑continuous ☐hourly ☐ weekly ☑ monthly ☐quarterly ☐annually	☑SCADA ☑ grab sampling ☐ steel tape ☐ stream gauge
Hamel 4 520048	☑ production well ☐ observation well ☐ source water intake ☐ source water reservoir	☐Routine MDH sampling ☑Routine water utility sampling ☐ other	☑continuous ☐hourly ☐ weekly ☑ monthly ☐quarterly ☐annually	☑SCADA ☑ grab sampling ☐ steel tape ☐ stream gauge
Hamel 5 709925	☑ production well ☐ observation well ☐ source water intake ☐ source water	☐Routine MDH sampling ☑Routine water utility sampling ☐ other	☑continuous ☐hourly ☐ weekly ☑ monthly ☐quarterly	☑SCADA ☑ grab sampling ☐ steel tape ☐ stream gauge

MN Unique Well # or Surface Water ID	Type of monitoring point	Monitoring program	Frequency of monitoring	Monitoring Method
	reservoir		☐annually	
Hamel 6 747666	☑ production well ☐ observation well ☐ source water intake ☐ source water reservoir	☐Routine MDH sampling ☑Routine water utility sampling ☐ other	☑continuous ☐hourly ☐ weekly ☑ monthly ☐quarterly ☐annually	☑SCADA ☑ grab sampling ☐ steel tape ☐ stream gauge
Hamel 7 759809	☑ production well ☐ observation well ☐ source water intake ☐ source water reservoir	☐Routine MDH sampling ☑Routine water utility sampling ☐ other	☑continuous ☐hourly ☐ weekly ☑ monthly ☐quarterly ☐annually	☑SCADA ☑ grab sampling ☐ steel tape ☐ stream gauge
Hamel 8 814752	☑ production well ☐ observation well ☐ source water intake ☐ source water reservoir	☐Routine MDH sampling ☑Routine water utility sampling ☐ other	☑continuous ☐hourly ☐ weekly ☑ monthly ☐quarterly ☐annually	☑SCADA ☑ grab sampling ☐ steel tape ☐ stream gauge
Independence Beach 1 - 100219	☑ production well ☐ observation well ☐ source water intake ☐ source water reservoir	☐Routine MDH sampling ☑Routine water utility sampling ☐ other	☐continuous ☐hourly ☑ weekly ☑ monthly ☐quarterly ☐annually	☐SCADA ☐ grab sampling ☑ sounder ☐ stream gauge
Independence Beach 2 – 448765	☑ production well ☐ observation well ☐ source water intake ☐ source water reservoir	☐Routine MDH sampling ☑Routine water utility sampling ☐ other	☐continuous ☐hourly ☑ weekly ☑ monthly ☐quarterly ☐annually	☐SCADA ☐ grab sampling ☑ sounder ☐ stream gauge
Morningside 1 - 208009	☑ production well ☐ observation well ☐ source water intake ☐ source water reservoir	☐Routine MDH sampling ☑Routine water utility sampling ☐ other	☐continuous ☐hourly ☑ weekly ☑ monthly ☐quarterly ☐annually	☐SCADA ☐ grab sampling ☑ sounder ☐ stream gauge
Morningside 2 - 223378	☑ production well ☐ observation well ☐ source water intake ☐ source water reservoir	☐Routine MDH sampling ☑Routine water utility sampling ☐ other	☐continuous ☐hourly ☑ weekly ☑ monthly ☐quarterly ☐annually	☐SCADA ☐ grab sampling ☑ sounder ☐ stream gauge

*Iron & Manganese is monitored weekly; bacteria is monitored monthly or bi-monthly

Water Level Data

A water level monitoring plan that includes monitoring locations and a schedule for water level readings must be submitted as **Appendix 2**. If one does not already exist, it needs to be prepared and submitted with the WSP. Ideally, all production and observation wells are monitored at least monthly.

Complete Table 9 to summarize water level data for each well being monitored. Provide the name of the aquifer and a brief description of how much water levels vary over the season (the difference between the highest and lowest water levels measured during the year) and the long-term trends for each well. If water levels are not measured and recorded on a routine basis, then provide the static water level when each well was constructed and the most recent water level measured during the same season the well was constructed. Also include all water level data taken during any well and pump maintenance. Add rows to the table as needed.

Provide water level data graphs for each well in **Appendix 3** for the life of the well, or for as many years as water levels have been measured. See DNR website for Date Time Water Level http://www.dnr.state.mn.us/waters/groundwater_section/obwell/waterleveldata.html

Table 9. Water level data

Unique Well Number or Well ID	Aquifer Name	Seasonal Variation (Feet) *	Long-term Trend in water level data	Water level measured during well/pumping maintenance
Hamel 3 122239	CTCW	Approximately 15.4-ft	☐ Falling ☑ Stable ☐ Rising	See appendix 3
Hamel 4 520048	CMTS	Approximately 19.3-ft	☐ Falling ☑ Stable ☐ Rising	See appendix 3
Hamel 5 709925	QWTA	Approximately 6.2-ft	☐ Falling ☑ Stable ☐ Rising	See appendix 3
Hamel 6 747666	CJDN	Approximately 4.4-ft	☐ Falling ☑ Stable ☐ Rising	See appendix 3
Hamel 7 759809	CJDN	Approximately 5.1-ft	☐ Falling ☑ Stable ☐ Rising	See appendix 3
IB-1 100219	QBAA	Approximately 0.71-ft	☐ Falling ☑ Stable ☐ Rising	See appendix 3
IB-2 448765	QBAA	Approximately 0.79-ft	☐ Falling ☑ Stable ☐ Rising	See appendix 3
MS-1 208009	QBAA	Approximately 1.34-feet	☐ Falling ☑ Stable ☐ Rising	See appendix 3
MS-2 223378	QBAA	Approximately 1.21-feet	☐ Falling ☑ Stable ☐ Rising	See appendix 3

*Seasonal variation averaged from 2010-2016 monitoring data

Potential Water Supply Issues & Natural Resource Impacts – *Key DNR & Metropolitan Council Benchmark*

Complete Table 10 by listing the types of natural resources that are or could be impacted by permitted water withdrawals. If known, provide the name of specific resources that may be impacted. Identify what the greatest risks to the resource are and how the risks are being assessed. Identify any resource protection thresholds – formal or informal – that have been established to identify when actions should be taken to mitigate impacts. Provide information about the potential mitigation actions that may be taken, if a resource protection threshold is crossed. Add additional rows to the table as needed. See the glossary at the end of the template for definitions.

Some of this baseline data should have been in your earlier water supply plans or county comprehensive water plans. When filling out this table, think of what are the water supply risks, identify the resources, determine the threshold and then determine what your community will do to mitigate the impacts.

Your DNR area hydrologist is available to assist with this table.

For communities in the seven-county Twin Cities metropolitan area, the *Master Water Supply Plan Appendix 1 (Water Supply Profiles*, provides information about potential water supply issues and natural resource impacts for your community.

Table 10. Natural resource impacts

Resource Type	Resource Name	Risk	Risk Assessed Through	Describe Resource Protection Threshold*	Mitigation Measure or Management Plan	Describe How Changes to Thresholds are Monitored
☐ River or stream		☐ Flow/water level decline ☐ Degrading water quality trends and/or MCLs exceeded ☐ Impacts on endangered, threatened, or special concern species habitat or other natural resource impacts ☐ Other:	☐ GIS analysis ☐ Modeling ☐ Mapping ☐ Monitoring ☐ Aquifer testing ☐ Other: ___		☐ Revise permit ☐ Change groundwater pumping ☐ Increase conservation ☐ Other	
☐ Calcareous fen		☐ Flow/water level decline ☐ Degrading water quality trends and/or MCLs exceeded ☐ Impacts on endangered, threatened, or	☐ GIS analysis ☐ Modeling ☐ Mapping ☐ Monitoring ☐ Aquifer testing ☐ Other: ___		☐ Revise permit ☐ Change groundwater pumping ☐ Increase conservation ☐ Other	

Resource Type	Resource Name	Risk	Risk Assessed Through	Describe Resource Protection Threshold*	Mitigation Measure or Management Plan	Describe How Changes to Thresholds are Monitored
		special concern species habitat or other natural resource impacts ☐Other: _____				
☑ Lake		☐ Flow/water level decline ☐ Degrading water quality trends and/or MCLs exceeded ☐ Impacts on endangered, threatened, or special concern species habitat or other natural resource impacts ☑ Other: Unknown	☐ GIS analysis ☐ GIS analysis ☐ Modeling ☐ Mapping ☑ Monitoring ☐ Aquifer testing ☐ Other: ___		☐ Revise permit ☐ Change groundwater pumping ☐ Increase conservation ☐ Other	
☐ Wetland		☐ Flow/water level decline ☐ Degrading water quality trends and/or MCLs exceeded ☐ Impacts on endangered, threatened, or special concern species habitat or other natural resource impacts ☐Other: _____	☐ GIS analysis ☐ Modeling ☐ Mapping ☐ Monitoring ☐ Aquifer testing ☐ Other: ___		☐ Revise permit ☐ Change groundwater pumping ☐ Increase conservation ☐ Other	
☐ Trout Stream		☐ Flow/water level decline ☐ Degrading water quality trends and/or MCLs exceeded ☐ Impacts on endangered, threatened, or	☐ GIS analysis ☐ Modeling ☐ Mapping ☐ Monitoring ☐ Aquifer testing ☐ Other: ___		☐ Revise permit ☐ Change groundwater pumping ☐ Increase conservation ☐ Other	

Resource Type	Resource Name	Risk	Risk Assessed Through	Describe Resource Protection Threshold*	Mitigation Measure or Management Plan	Describe How Changes to Thresholds are Monitored
		special concern species habitat or other natural resource impacts ☐Other: _____				
☑ Aquifer		☑ Flow/water level decline ☐ Degrading water quality trends and/or MCLs exceeded ☐ Impacts on endangered, threatened, or special concern species habitat or other natural resource impacts ☐Other: _____	☐ GIS analysis ☐ Modeling ☐ Mapping ☐ Monitoring ☐ Aquifer testing ☑ Other: Well Pumping	Aquifer drawdown to the extent the wells cannot operate properly.	☐ Revise permit ☑ Change groundwater pumping ☑ Increase conservation ☐ Other	The City has a SCADA system to monitor water levels and will know if the wells cannot produce water effectively.
☐ Endangered, threatened, or special concern species habitat, other Natural resource impacts						

* Examples of thresholds: a lower limit on acceptable flow in a river or stream; water quality outside of an accepted range; a lower limit on acceptable aquifer level decline at one or more monitoring wells; withdrawals that exceed some percent of the total amount available from a source; or a lower limit on acceptable changes to a protected habitat.

Wellhead Protection (WHP) and Surface Water Protection (SWP) Plans

Complete Table 11 to provide status information about WHP and SWP plans.

The emergency procedures in this plan are intended to comply with the contingency plan provisions required in the Minnesota Department of Health's (MDH) Wellhead Protection (WHP) Plan and Surface Water Protection (SWP) Plan.

Table 11. Status of Wellhead Protection and Surface Water Protection Plans

Plan Type	Status	Date Adopted	Date for Update
WHP	☐ In Process ☑Completed ☐ Not Applicable	August 2013	August 2023
SWP	☐ In Process ☐ Completed ☑ Not Applicable		

WHP – Wellhead Protection Plan **SWP** – Source Water Protection Plan

F. Capital Improvement Plan (CIP)

Please note that any wells that received approval under a ten-year permit, but that were not built, are now expired and must submit a water appropriations permit.

Adequacy of Water Supply System

Complete Table 12 with information about the adequacy of wells and/or intakes, storage facilities, treatment facilities, and distribution systems to sustain current and projected demands. List planned capital improvements for any system components, in chronological order. Communities in the seven-county Twin Cities metropolitan area should also include information about plans through 2040.

The assessment can be the general status by category; it is not necessary to identify every single well, storage facility, treatment facility, lift station, and mile of pipe.

Please attach your latest Capital Improvement Plan as **Appendix 4**.

Table 12. Adequacy of Water Supply System

System Component	Planned action	Anticipated Construction Year	Notes
Wells/Intakes	☐ No action planned - adequate ☐ Repair/replacement ☑ Expansion/addition	2016-2017	Well No.8/ pump/controls
Water Storage Facilities	☐ No action planned - adequate ☑ Repair/replacement ☑ Expansion/addition	TBD	Water tower
Water Treatment Facilities	☐ No action planned - adequate ☑Repair/replacement ☑ Expansion/addition	2017	Water treatment plant expansion Wellhouse No.3
Distribution Systems (pipes, valves, etc.)	☐ No action planned - adequate ☑ Repair/replacement ☐ Expansion/addition	TBD	Tower Drive and Hamel Road West watermain
Pressure Zones	☐ No action planned - adequate ☐ Repair/replacement ☐ Expansion/addition		

System Component	Planned action	Anticipated Construction Year	Notes
Other:	☐ No action planned - adequate ☐ Repair/replacement ☐ Expansion/addition		

Proposed Future Water Sources

Complete Table 13 to identify new water source installation planned over the next ten years. Add rows to the table as needed.

Table 13. Proposed future installations/sources

Source	Installation Location (approximate)	Resource Name	Proposed Pumping Capacity (gpm)	Planned Installation Year	Planned Partnerships
Groundwater	n/a				
Surface Water	n/a				
Interconnection to another supplier	n/a				

Water Source Alternatives - *Key Metropolitan Council Benchmark*

Do you anticipate the need for alternative water sources in the next 10 years? __ Yes ✓ No

For metro communities, will you need alternative water sources by the year 2040? __ Yes ✓ No

If you answered yes for either question, then complete table 14. If no, insert NA.

Complete Table 14 by checking the box next to alternative approaches that your community is considering, including approximate locations (if known), the estimated amount of future demand that could be met through the approach, the estimated timeframe to implement the approach, potential partnerships, and the major benefits and challenges of the approach. Add rows to the table as needed.

For communities in the seven-county Twin Cities metropolitan area, these alternatives should include approaches the community is considering to meet projected 2040 water demand.

Table 14. Alternative water sources

Alternative Source Considered	Source and/or Installation Location (approximate)	Estimated Amount of Future Demand (%)	Timeframe to Implement (YYYY)	Potential Partners	Benefits	Challenges
☐ Groundwater						
☐ Surface Water						

Alternative Source Considered	Source and/or Installation Location (approximate)	Estimated Amount of Future Demand (%)	Timeframe to Implement (YYYY)	Potential Partners	Benefits	Challenges
☐ Reclaimed Stormwater						
☐ Reclaimed Wastewater						
☐ Interconnection to another supplier						

Part 2. Emergency Preparedness Procedures

The emergency preparedness procedures outlined in this plan are intended to comply with the contingency plan provisions required by MDH in the WHP and SWP. Water emergencies can occur as a result of vandalism, sabotage, accidental contamination, mechanical problems, power failings, drought, flooding, and other natural disasters. The purpose of emergency planning is to develop emergency response procedures and to identify actions needed to improve emergency preparedness. In the case of a municipality, these procedures should be in support of, and part of, an all-hazard emergency operations plan. Municipalities that already have written procedures dealing with water emergencies should review the following information and update existing procedures to address these water supply protection measures.

A. Federal Emergency Response Plan

Section 1433(b) of the Safe Drinking Water Act, (Public Law 107-188, Title IV- Drinking Water Security and Safety) requires community water suppliers serving over 3,300 people to prepare an Emergency Response Plan.

Do you have a federal emergency response plan? ☑ Yes ☐ No

If yes, what was the date it was certified? ____September 24, 2015_____

Complete Table 15 by inserting the noted information regarding your completed Federal Emergency Response Plan.

Table 15. Emergency Preparedness Plan contact information

Emergency Response Plan Role	Contact Person	Contact Phone Number	Contact Email
Emergency Response Lead	Steve Scherer	763-473-8842	Steve.scherer@ci.medina.mn.us
Alternate Emergency Response Lead	Ed Belland	612-868-9244	police@ci.medina.mn.us

B. Operational Contingency Plan

All utilities should have a written operational contingency plan that describes measures to be taken for water supply mainline breaks and other common system failures as well as routine maintenance.

Do you have a written operational contingency plan? ☑ Yes ☐ No

At a minimum, a water supplier should prepare and maintain an emergency contact list of contractors and suppliers.

C. Emergency Response Procedures

Water suppliers must meet the requirements of MN Rules 4720.5280 . Accordingly, the Minnesota Department of Natural Resources (DNR) requires public water suppliers serving more than 1,000 people to submit Emergency and Conservation Plans. Water emergency and conservation plans that have been approved by the DNR, under provisions of Minnesota Statute 186 and Minnesota Rules, part 6115.0770, will be considered equivalent to an approved WHP contingency plan.

Emergency Telephone List

Prepare and attach a list of emergency contacts, including the MN Duty Officer (1-800-422-0798), as **Appendix 5**. A template is available at www.mndnr.gov/watersupplyplans

The list should include key utility and community personnel, contacts in adjacent water suppliers, and appropriate local, state and federal emergency contacts. Please be sure to verify and update the contacts on the emergency telephone list and date it. Thereafter, update on a regular basis (once a year is recommended). In the case of a municipality, this information should be contained in a notification and warning standard operating procedure maintained by the Emergency Manager for that community. Responsibilities and services for each contact should be defined.

Current Water Sources and Service Area

Quick access to concise and detailed information on water sources, water treatment, and the distribution system may be needed in an emergency. System operation and maintenance records should be maintained in secured central and back-up locations so that the records are accessible for emergency purposes. A detailed map of the system showing the treatment plants, water sources, storage facilities, supply lines, interconnections, and other information that would be useful in an emergency should also be readily available. It is critical that public water supplier representatives and emergency response personnel communicate about the response procedures and be able to easily obtain this kind of information both in electronic and hard copy formats (in case of a power outage).

Do records and maps exist? ☑ Yes ☐ No

Can staff access records and maps from a central secured location in the event of an emergency?

☑ Yes ☐ No

Does the appropriate staff know where the materials are located?

☑ Yes ☐ No

Procedure for Augmenting Water Supplies

Complete Tables 16 – 17 by listing all available sources of water that can be used to augment or replace existing sources in an emergency. Add rows to the tables as needed.

In the case of a municipality, this information should be contained in a notification and warning standard operating procedure maintained by the warning point for that community. Municipalities are encouraged to execute cooperative agreements for potential emergency water services and copies should be included in **Appendix 6**. Outstate Communities may consider using nearby high capacity wells (industry, golf course) as emergency water sources.

WSP should include information on any physical or chemical problems that may limit interconnections to other sources of water. Approvals from the MDH are required for interconnections or the reuse of water.

Table 16. Interconnections with other water supply systems to supply water in an emergency

Other Water Supply System Owner	Capacity (GPM & MGD)	Note Any Limitations On Use	List of services, equipment, supplies available to respond
City of Plymouth	n/a	Minimal pressures due to elevation differences	Water connection
City of Orono	n/a	Only Morningside system	Water connection
City of Maple Plain	n/a	Only Independence Beach system	Water connection

GPM – Gallons per minute MGD – million gallons per day

Table 17. Utilizing surface water as an alternative source

Surface Water Source Name	Capacity (GPM)	Capacity (MGD)	Treatment Needs	Note Any Limitations On Use
City of Corcoran	n/a	n/a	n/a	Future 2017

If not covered above, describe additional emergency measures for providing water (obtaining bottled water, or steps to obtain National Guard services, etc.)

The City's Contingency Plan is to adapt to the problem at hand. In the situation of water contamination, water would be distributed at public works and a source for bottled water would be located to distribute.

Allocation and Demand Reduction Procedures

Complete Table 18 by adding information about how decisions will be made to allocate water and reduce demand during an emergency. Provide information for each customer category, including its priority ranking, average day demand, and demand reduction potential for each customer category. Modify the customer categories as needed, and add additional lines if necessary.

Water use categories should be prioritized in a way that is consistent with Minnesota Statutes 103G.261 (#1 is highest priority) as follows:

1. Water use for human needs such as cooking, cleaning, drinking, washing and waste disposal; use for on-farm livestock watering; and use for power production that meets contingency requirements.
2. Water use involving consumption of less than 10,000 gallons per day (usually from private wells or surface water intakes)
3. Water use for agricultural irrigation and processing of agricultural products involving consumption of more than 10,000 gallons per day (usually from private high-capacity wells or surface water intakes)
4. Water use for power production above the use provided for in the contingency plan.
5. All other water use involving consumption of more than 10,000 gallons per day.
6. Nonessential uses – car washes, golf courses, etc.

Water used for human needs at hospitals, nursing homes and similar types of facilities should be designated as a high priority to be maintained in an emergency. Lower priority uses will need to address water used for human needs at other types of facilities such as hotels, office buildings, and manufacturing plants. The volume of water and other types of water uses at these facilities must be carefully considered. After reviewing the data, common sense should dictate local allocation priorities to protect domestic requirements over certain types of economic needs. Water use for lawn sprinkling, vehicle washing, golf courses, and recreation are legislatively considered non-essential.

Table 18. Water use priorities

Customer Category	Allocation Priority	Average Daily Demand (GDP)	Short-Term Emergency Demand Reduction Potential (GPD)
Residential	1	217,000	75,000
Commercial	2	59,000	11,000
Irrigation/other	3	106,000	105,000
TOTAL		382,000	191,000

GPD – Gallons per Day; *Average daily demands were calculated using average 2010-2015 water use data summed across the Hamel, Independence Beach, and Morningside systems.

Tip: Calculating Emergency Demand Reduction Potential

The emergency demand reduction potential for all uses will typically equal the difference between maximum use (summer demand) and base use (winter demand). In extreme emergency situations, lower priority water uses must be restricted or eliminated to protect priority domestic water requirements. Emergency demand reduction potential should be based on average day demands for customer categories within each priority class. Use the tables in Part 3 on water conservation to help you determine strategies.

Complete Table 19 by selecting the triggers and actions during water supply disruption conditions.

Table 19. Emergency demand reduction conditions, triggers and actions (Select all that may apply and describe)

Emergency Triggers	Short-term Actions	Long-term Actions
☑ Contamination ☑ Loss of production ☑ Infrastructure failure ☑ Executive order by Governor	☐ Supply augmentation through ____ ☑ Adopt (if not already) and enforce a critical water deficiency ordinance to penalize lawn watering, vehicle washing, golf course and park irrigation & other nonessential uses. ☑ Water allocation through emergency action of City Council ☐ Meet with large water users to discuss their contingency plan. ☑ Voluntary reduction measures encouraged by public service announcements, i.e. bill stuffers, fliers, social media, and	☑ Supply augmentation through interconnects ☑ Adopt (if not already) and enforce a critical water deficiency ordinance to penalize lawn watering, vehicle washing, golf course and park irrigation & other nonessential uses. ☑ Water allocation through emergency action of City Council ☑ Meet with large water users to discuss their contingency plan.

Emergency Triggers	Short-term Actions	Long-term Actions
	notices in local newspaper.	

Notification Procedures

Complete Table 20 by selecting trigger for informing customers regarding conservation requests, water use restrictions, and suspensions; notification frequencies; and partners that may assist in the notification process. Add rows to the table as needed.

Table 20. Plan to inform customers regarding conservation requests, water use restrictions, and suspensions

Notification Trigger(s)	Methods (select all that apply)	Update Frequency	Partners
☑ Short-term demand reduction declared (< 1 year)	☑ Website ☐ Email list serve ☑ Social media (e.g. Twitter, Facebook) ☑ Direct customer mailing, ☑ Press release (TV, radio, newspaper), ☐ Meeting with large water users (> 10% of total city use) ☐ Other: _____	☐ Daily ☐ Weekly ☑ Monthly ☐ Annually	City Staff, Neighboring communities, Local news outlets
☑ Long-term Ongoing demand reduction declared	☑ Website ☐ Email list serve ☑ Social media (e.g. Twitter, Facebook) ☑ Direct customer mailing, ☑ Press release (TV, radio, newspaper), ☐ Meeting with large water users (> 10% of total city use) ☐ Other: _____	☐ Daily ☐ Weekly ☑ Monthly ☐ Annually	City Staff, Neighboring communities, Local news outlets
☑ Governor's Critical water deficiency declared	☑ Website ☐ Email list serve ☑ Social media (e.g. Twitter, Facebook) ☐ Direct customer mailing, ☑ Press release (TV, radio, newspaper), ☐ Meeting with large water users (> 10% of total city use) ☐ Other: _____	☐ Daily ☐ Weekly ☐ Monthly ☐ Annually ☑ As needed	City Staff, Neighboring communities, Local news outlets

Enforcement

Prior to a water emergency, municipal water suppliers must adopt regulations that restrict water use and outline the enforcement response plan. The enforcement response plan must outline how conditions will be monitored to know when enforcement actions are triggered, what enforcement tools will be used, who will be responsible for enforcement, and what timelines for corrective actions will be expected.

Affected operations, communications, and enforcement staff must then be trained to rapidly implement those provisions during emergency conditions.

Important Note:

Disregard of critical water deficiency orders, even though total appropriation remains less than permitted, is adequate grounds for immediate modification of a public water supply authority's water use permit (2013 MN Statutes 103G.291)

Does the city have a critical water deficiency ordinance in place that includes provisions to restrict water use and enforce the restrictions? ☑ Yes ☐ No

If yes, attach the ordinance to this WSP as **Appendix 7**.

If no, the municipality must adopt such an ordinance within 6 months of submitting this WSP and submit it to the DNR as an amendment to this WSP.

Irrespective of whether a critical water deficiency ordinance is in place, does the public water supply utility, city manager, mayor, or emergency manager have standing authority to implement water restrictions? ☑ Yes ☐ No

If yes, cite the regulatory authority reference: Chapter 7: Section 710.69

If no, who has authority to implement water use restrictions in an emergency?

PART 3. WATER CONSERVATION PLAN

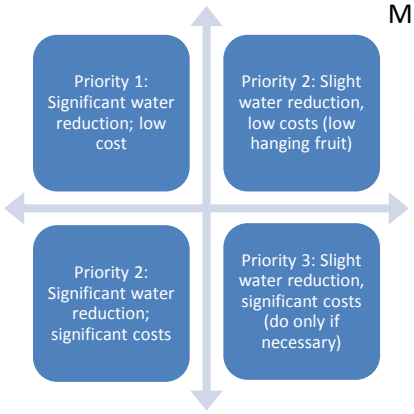

Minnesotans have historically benefited from the state's abundant water supplies, reducing the need for conservation. There are however, limits to the available supplies of water and increasing threats to the quality of our drinking water. Causes of water supply limitation may include: population increases, economic trends, uneven statewide availability of groundwater, climatic changes, and degraded water quality. Examples of threats to drinking water quality include: the presence of contaminant plumes from past land use activities, exceedances of water quality standards from natural and human sources, contaminants of emerging concern, and increasing pollutant trends from nonpoint sources.

There are many incentives for conserving water; conservation:

- reduces the potential for pumping-induced transfer of contaminants into the deeper aquifers, which can add treatment costs
- reduces the need for capital projects to expand system capacity
- reduces the likelihood of water use conflicts, like well interference, aquatic habitat loss, and declining lake levels
- conserves energy, because less energy is needed to extract, treat and distribute water (and less energy production also conserves water since water is use to produce energy)
- maintains water supplies that can then be available during times of drought

It is therefore imperative that water suppliers implement water conservation plans. The first step in water conservation is identifying opportunities for behavioral or engineering changes that could be made to reduce water use by conducting a thorough analysis of:

- Water use by customer
- Extraction, treatment, distribution and irrigation system efficiencies
- Industrial processing system efficiencies
- Regulatory and barriers to conservation
- Cultural barriers to conservation
- Water reuse opportunities

Once accurate data is compiled, water suppliers can set achievable goals for reducing water use. A successful water conservation plan follows a logical sequence of events. The plan should address both conservation on the supply side (leak detection and repairs, metering), as well as on the demand side (reductions in usage). Implementation should be conducted in phases, starting with the most obvious and lowest-cost options. In some cases one of the early steps will be reviewing regulatory constraints to water conservation, such as lawn irrigation requirements. Outside funding and grants may be available for implementation of projects. Engage water system operators and maintenance staff and customers in brainstorming opportunities to reduce water use. Ask the question: "How can I help save water?"

Progress since 2006

Is this your community's first Water Supply Plan? ☐ Yes ☑ No

If yes, describe conservation practices that you are already implementing, such as: pricing, system improvements, education, regulation, appliance retrofitting, enforcement, etc.

If no, complete Table 21 to summarize conservation actions taken since the adoption of the 2006 water supply plan.

Table 21. Implementation of previous ten-year Conservation Plan

2006 Plan Commitments	Action Taken?
Change Water Rates Structure to provide conservation pricing	☑ Yes ☐ No
Water Supply System Improvements (e.g. leak repairs, valve replacements, etc.)	☑ Yes ☐ No
Educational Efforts	☐ Yes ☐ No
New water conservation ordinances: The City has put into place an irrigation policy that restricts the usage of treated water for irrigation.	☑ Yes ☐ No
Rebate or retrofitting Program (e.g. for toilet, faucets, appliances, showerheads, dish washers, washing machines, irrigation systems, rain barrels, water softeners, etc.	☐ Yes ☐ No
Enforcement	☐ Yes ☐ No
Describe Other: City has put into place an irrigation policy in 2008 that restricts the usage of treated water for irrigation.	☑ Yes ☐ No

What are the results you have seen from the actions in Table 21 and how were results measured?

In the last 10 years, the residential per capita demand and the total per capita demand have decreased. These results were measured through the City's water meter data.

A. Triggers for Allocation and Demand Reduction Actions

Complete table 22 by checking each trigger below, as appropriate, and the actions to be taken at various levels or stages of severity. Add in additional rows to the table as needed.

Table 22. Short and long-term demand reduction conditions, triggers and actions

Objective	Triggers	Actions
Protect Surface Water Flows	☐ Low stream flow conditions ☑ Reports of declining wetland and lake levels ☑Other: declining surface water quality	☑ Increase promotion of conservation measures ☑ Other: Consider water reuse/stormwater irrigation project for golf courses, parks, car washing facility, etc…
Short-term demand reduction (less than 1 year	☑ Extremely high seasonal water demand (more than	☑ Enforce the critical water deficiency ordinance to restrict or prohibit lawn

Objective	Triggers	Actions
	double winter demand) ☑ Loss of treatment capacity ☑Lack of water in storage ☑ State drought plan ☐ Well interference ☐ Other: _____	watering, vehicle washing, golf course and park irrigation & other nonessential uses. ☑ Supply augmentation through interconnection ☑ Water allocation through interconnection ☐ Meet with large water users to discuss user's contingency plan.
Long-term demand reduction (>1 year)	☑ Per capita demand increasing ☑ Declared emergency ☐ Total demand increase (higher population or more industry)Water level in well(s) below elevation of _____	☑ Develop a critical water deficiency ordinance that is or can be quickly adopted to penalize lawn watering, vehicle washing, golf course and park irrigation & other nonessential uses. ☑ Enact a water waste ordinance that targets overwatering (causing water to flow off the landscape into streets, parking lots, or similar), watering impervious surfaces (streets, driveways or other hardscape areas), and negligence of known leaks, breaks, or malfunctions. ☐ Meet with large water users to discuss user's contingency plan. ☑ Enhanced monitoring and reporting: audits, meters, billing, etc.
Governor's "Critical Water Deficiency Order" declared	☑ Governor declaration as needed	☑ Take action as directed by the governor

B. Conservation Objectives and Strategies – *Key benchmark for DNR*

This section establishes water conservation objectives and strategies for eight major areas of water use.

Objective 1: Reduce Unaccounted (Non-Revenue) Water loss to Less than 10%

The Minnesota Rural Waters Association, the Metropolitan Council and the Department of Natural Resources recommend that all water uses be metered. Metering can help identify high use locations and times, along with leaks within buildings that have multiple meters.

It is difficult to quantify specific unmetered water use such as that associated with firefighting and system flushing or system leaks. Typically, water suppliers subtract metered water use from total water pumped to calculate unaccounted or non-revenue water loss.

Is your ten-year average (2005-2014) unaccounted Water Use in Table 2 higher than 10%?

☑ Yes ☐ No

What is your leak detection monitoring schedule? (e.g. monitor 1/3rd of the city lines per year)

Periodic as needed.

Water Audits - are intended to identify, quantify and verify water and revenue losses. The volume of unaccounted-for water should be evaluated each billing cycle. The American Water Works Association (AWWA) recommends that ten percent or less of pumped water is unaccounted-for water. Water audit

procedures are available from the AWWA and MN Rural Water Association www.mrwa.com . Drinking Water Revolving Loan Funds are available for purchase of new meters when new plants are built.

What is the date of your most recent water audit? City does audits monthly

Frequency of water audits: ☐ **yearly** ☑ **other (specify frequency) ___monthly_____**

Leak detection and survey: ☐ **every year** ☐ **every other year** ☑ **periodic as needed**
Year last leak detection survey completed: __N/A___

If Table 2 shows annual water losses over 10% or an increasing trend over time, describe what actions will be taken to reach the <10% loss objective and within what timeframe

The City will continue with an ongoing meter repair and replacement program that has been established throughout the City. Annual hydrant flushing will also continue to be metered.

Metering -AWWA recommends that every water supplier install meters to account for all water taken into its system, along with all water distributed from its system at each customer's point of service. An effective metering program relies upon periodic performance testing, repair, maintenance or replacement of all meters. AWWA also recommends that water suppliers conduct regular water audits to ensure accountability. Some cities install separate meters for interior and exterior water use, but some research suggests that this may not result in water conservation.

Complete Table 23 by adding the requested information regarding the number, types, testing and maintenance of customer meters.

Table 23. Information about customer meters

Customer Category	Number of Customers	Number of Metered Connections	Number of Automated Meter Readers	Meter testing intervals (years)	Average age/meter replacement schedule (years
Residential	1,111	1,111	1,111	Random: Every 2 years	<5 years / *
Irrigation meters	n/a	n/a	n/a	Random: Every 2 years	
Commercial	143	143	143	Random: Every 2 years	<5 years / *
Industrial	0	0	0	Random: Every 2 years	<5 years / *
Public Facilities	n/a	n/a	n/a	Random: Every 2 years	n/a
Agricultural	243	243	243	Random: Every 2 years	<5 years / *
TOTALS	1,497	1,497	1,497	n/a	n/a

* Every 2 years, old meters are randomly tested to determine accuracy. The City will continue to use test information to decide when necessary to replace meters

For unmetered systems, describe any plans to install meters or replace current meters with advanced technology meters. Provide an estimate of the cost to implement the plan and the projected water savings from implementing the plan.

The City will use test information to decide when it is necessary to replace meters in a given area.

Table 24. Water source meters

	Number of Meters	Meter testing schedule	Number of Automated Meter Readers	Average age/meter replacement schedule
Water Source (wells/intakes)	10	Weekly	10	13 years/as needed
Treatment Plant	1	Weekly	1	2 years/as needed

Objective 2: Achieve Less than 75 Residential Gallons per Capita Demand (GPCD)

The 2002 average residential per capita demand in the Twin Cities Metropolitan area was 75 gallons per capita per day.

Is your average 2010-2015 residential per capita water demand in Table 2 more than 75? ☐ Yes ☑ No

What was your 2005 – 2014 ten-year average residential per capita water demand? _87.5 gal/person/day

Describe the water use trend over that timeframe:

From the MnDNR and City water use reports show that over the last 10 years, the residential per capita water demand has steadily decreased.

Complete Table 25 by checking which strategies you will use to continue reducing residential per capita demand and project a likely timeframe for completing each checked strategy (Select all that apply and add rows for additional strategies):

Table 25. Strategies and timeframe to reduce residential per capita demand

Strategy to reduce residential per capita demand	Timeframe for completing work
☑ Review city ordinances/codes to encourage or require water efficient landscaping.	1-3 years following implementation of this plan
☑ Review city ordinance/codes to permit water reuse options, especially for non-potable purposes like irrigation, groundwater recharge, and industrial use. Check with plumbing authority to see if internal buildings reuse is permitted	Annually
☑ Revise ordinances to limit irrigation. Describe the restricted irrigation plan:	3-6 years following implementation of this plan
☐ Revise outdoor irrigation installations codes to require high efficiency systems (e.g. those with soil moisture sensors or programmable watering areas) in new installations or system replacements.	
☑ Make water system infrastructure improvements	Ongoing
☐ Offer free or reduced cost water use audits) for residential customers.	
☐ Implement a notification system to inform customers when water availability conditions change.	
☑ Provide rebates or incentives for installing water efficient appliances and/or fixtures indoors (e.g., low flow toilets, high efficiency dish washers and washing machines,	The City will apply for the Met Council's water efficiency grant in 2017

Strategy to reduce residential per capita demand	Timeframe for completing work
showerhead and faucet aerators, water softeners, etc.)	
☑ Provide rebates or incentives to reduce outdoor water use (e.g. smart irrigation, outdoor water use meters)	Annually
☐ Identify supplemental Water Resources	
☑ Conduct audience-appropriate water conservation education and outreach.	Ongoing
☐ Describe other plans	

Objective 3: Achieve at least a 1.5% per year water reduction for Institutional, Industrial, Commercial, and Agricultural GPCD over the next 10 years or a 15% reduction in ten years.
Complete Table 26 by checking which strategies you will used to continue reducing non-residential customer use demand and project a likely timeframe for completing each checked strategy (add rows for additional strategies).

Where possible, substitute recycled water used in one process for reuse in another. (For example, spent rinse water can often be reused in a cooling tower.) Keep in mind the true cost of water is the amount on the water bill PLUS the expenses to heat, cool, treat, pump, and dispose of/discharge the water. Don't just calculate the initial investment. Many conservation retrofits that appear to be prohibitively expensive are actually very cost-effective when amortized over the life of the equipment. Often reducing water use also saves electrical and other utility costs. Note: as of 2015, water reuse, and is not allowed by the state plumbing code, M.R. 4715 (a variance is needed). However several state agencies are addressing this issue.

Table 26. Strategies and timeframe to reduce institutional, commercial, industrial, and agricultural and non-revenue use demand

Strategy to reduce total business, industry, agricultural demand	Timeframe for completing work
☑ Conduct a facility water use audit for both indoor and outdoor use, including system components	Annually
☑ Install enhanced meters capable of automated readings to detect spikes in consumption	Ongoing
☐ Compare facility water use to related industry benchmarks, if available (e.g., meat processing, dairy, fruit and vegetable, beverage, textiles, paper/pulp, metals, technology, petroleum refining etc.),	
☑ Install water conservation fixtures and appliances or change processes to conserve water	Ongoing
☑ Repair leaking system components (e.g., pipes, valves)	Ongoing
☑ Investigate the water reuse of reclaimed water (e.g., stormwater, wastewater effluent, process wastewater, etc.)	Ongoing
☑ Reduce outdoor water use (e.g., turf replacement/reduction, rain gardens, rain barrels, smart irrigation, outdoor water use meters, etc.)	Ongoing
☑ Train employees how to conserve water	Ongoing: Include for new employee training
☐ Implement a notification system to inform non-residential customers when water availability conditions change.	
☐ [Rainwater catchment systems intended to supply uses such as water closets, urinals, trap primers for floor drains and floor sinks, industrial processes, water features, vehicle	

Strategy to reduce total business, industry, agricultural demand	Timeframe for completing work
washing facilities, cooling tower makeup, and similar uses shall be approved by the commissioner. Proposed plumbing code 4714.1702.1 http://www.dli.mn.gov/PDF/docket/4714rule.pdf	
☐ Describe other plans:	

Objective 4: Achieve a Decreasing Trend in Total Per Capita Demand

Include as **Appendix 8** one graph showing total per capita water demand for each customer category (i.e., residential, institutional, commercial, industrial) from 2005-2014 and add the calculated/estimated linear trend for the next 10 years.

Describe the trend for each customer category; explain the reason(s) for the trends, and where trends are increasing.

For all of Medina's water districts, the residential category shows a decreasing water trend from 2007 to 2015 with a few exceptions in 2012 and 2015. Commercial customer category shows a decreasing water trend from 2009 to 2011 and a minor increase from 2012 to 2015. The City does not have records from 2005 to 2008 for the irrigation customer category. From 2009 to 2015 there is a slight increase in water usage with the exceptions of 2013 and 2014. Over time, the effects of the City water system irrigation connection ban and other education efforts should continue to lower the total per capita demand.

Objective 5: Reduce Peak Day Demand so that the Ratio of Average Maximum day to the Average Day is less than 2.6

Is the ratio of average 2005-2014 maximum day demand to average 2005-2014 average day demand reported in Table 2 more than 2.6? ☐ Yes ☑No

Calculate a ten year average (2005 – 2014) of the ratio of maximum day demand to average day demand: __2.4__

The position of the DNR has been that a peak day/average day ratio that is above 2.6 for in summer indicates that the water being used for irrigation by the residents in a community is too large and that efforts should be made to reduce the peak day use by the community.

It should be noted that by reducing the peak day use, communities can also reduce the amount of infrastructure that is required to meet the peak day use. This infrastructure includes new wells, new water towers which can be costly items.

Objective 6: Implement a Conservation Water Rate Structure and/or a Uniform Rate Structure with a Water Conservation Program

Water Conservation Program

Municipal water suppliers serving over 1,000 people are required to adopt demand reduction measures that include a conservation rate structure, or a uniform rate structure with a conservation program that achieves demand reduction. These measures must achieve demand reduction in ways that reduce water demand, water losses, peak water demands, and nonessential water uses. These measures must be approved before a community may request well construction approval from the Department of Health or before requesting an increase in water appropriations permit volume (*Minnesota Statutes*, section 103G.291, subd. 3 and 4). Rates should be adjusted on a regular basis to ensure that revenue of the system is adequate under reduced demand scenarios. If a municipal water supplier intends to use a Uniform Rate Structure, a community-wide Water Conservation Program that will achieve demand reduction must be provided.

Current Water Rates

Include a copy of the actual rate structure in **Appendix 9** or list current water rates including base/service fees and volume charges below.

Volume included in base rate or service charge: __4,000___ gallons or ____ cubic feet ___ other

Frequency of billing: ☑ Monthly ☐ Bimonthly ☐ Quarterly ☐ Other: _____

Water Rate Evaluation Frequency: ☐ every year ☐ every ___ years ☑ no schedule

Date of last rate change: _1/1/2016_

Table 27. Rate structures for each customer category (Select all that apply and add additional rows as needed)

Customer Category	Conservation Billing Strategies in Use *	Conservation Neutral Billing Strategies in Use **	Non-Conserving Billing Strategies in Use ***
Residential	☑ Monthly Billing ☑ Increasing block rates (volume tiered rates) ☐ Seasonal rates ☐ Time of Use rates ☑ Water bills reported in gallons ☐ Individualized goal rates ☐ Excess Use rates ☐ Drought surcharge ☐ Use water bill to provide comparisons ☐ Service charge not based on water volume ☑ Other (online paper-free payment option)	☐ Uniform ☑ Odd/Even day watering	☐ Service charge based on water volume ☐ Declining block ☐ Flat ☐ Other (describe)
Commercial/ Industrial/ Institutional	☑ Monthly Billing ☑ Increasing block rates ☐ Seasonal rates ☐ Time of Use rates ☑Bill water use in gallons	☐ Uniform ☑ Odd/Even day watering	☐ Service charge based on water volume ☐ Declining block ☐ Flat ☐ Other (describe)

Customer Category	Conservation Billing Strategies in Use *	Conservation Neutral Billing Strategies in Use **	Non-Conserving Billing Strategies in Use ***
	☐ Individualized goal rates ☐ Excess Use rates ☐ Drought surcharge ☐ Use water bill to provide comparisons ☐ Service charge not based on water volume ☑ Other (online paper-free payment option)		
☐ Other			

*** Rate Structures components that may promote water conservation:**

- **Monthly billing:** is encouraged to help people see their water usage so they can consider changing behavior.
- **Increasing block rates (also known as a tiered residential rate structure):** Typically, these have at least three tiers: should have at least three tiers.
    - The first tier is for the winter average water use.
    - The second tier is the year-round average use, which is lower than typical summer use. This rate should be set to cover the full cost of service.
    - The third tier should be above the average annual use and should be priced high enough to encourage conservation, as should any higher tiers. For this to be effective, the difference in block rates should be significant.
- **Seasonal rate:** higher rates in summer to reduce peak demands
- **Time of Use rates:** lower rates for off peak water use
- **Bill water use in gallons:** this allows customers to compare their use to average rates
- **Individualized goal rates:** typically used for industry, business or other large water users to promote water conservation if they keep within agreed upon goals. **Excess Use rates**: if water use goes above an agreed upon amount this higher rate is charged
- **Drought surcharge:** an extra fee is charged for guaranteed water use during drought
- **Use water bill to provide comparisons**: simple graphics comparing individual use over time or compare individual use to others.
- **Service charge or base fee that does not include a water volume** – a base charge or fee to cover universal city expenses that are not customer dependent and/or to provide minimal water at a lower rate (e.g., an amount less than the average residential per capita demand for the water supplier for the last 5 years)
- **Emergency rates** -A community may have a separate conservation rate that only goes into effect when the community or governor declares a drought emergency. These higher rates can help to protect the city budgets during times of significantly less water usage.

****Conservation Neutral****

- **Uniform rate**: rate per unit used is the same regardless of the volume used
- **Odd/even day watering** –This approach reduces peak demand on a daily basis for system operation, but it does not reduce overall water use.

***** Non-Conserving *****

- **Service charge or base fee with water volume:** an amount of water larger than the average residential per capita demand for the water supplier for the last 5 years
- **Declining block rate:** the rate per unit used decreases as water use increases.
- **Flat rate:** one fee regardless of how much water is used (usually unmetered).

Provide justification for any conservation neutral or non-conserving rate structures. If intending to adopt a conservation rate structure, include the timeframe to do so:

The City has implemented an odd/even watering restriction to reduce peak day demands during months of high water usage.

Objective 7: Additional strategies to Reduce Water Use and Support Wellhead Protection Planning

Development and redevelopment projects can provide additional water conservation opportunities, such as the actions listed below. If a Uniform Rate Structure is in place, the water supplier must provide a Water Conservation Program that includes at least two of the actions listed below. Check those actions that you intent to implement within the next 10 years.

Table 28. Additional strategies to Reduce Water Use & Support Wellhead Protection

☑	Consider participating in the GreenStep Cities Program, including implementation of at least one of the 20 "Best Practices" for water
☐	Prepare a Master Plan for Smart Growth (compact urban growth that avoids sprawl)
☐	Prepare a Comprehensive Open Space Plan (areas for parks, green spaces, natural areas)
☐	Adopt a Water Use Restriction Ordinance (lawn irrigation, car washing, pools, etc.)
☐	Adopt an Outdoor Lawn Irrigation Ordinance
☐	Adopt a Private well Ordinance (private wells in a city must comply with water restrictions)
☐	Implement a Stormwater Management Program
☐	Adopt Non-Zoning Wetlands Ordinance (can further protect wetlands beyond state/federal laws- for vernal pools, buffer areas, restrictions on filling or alterations)
☐	Adopt a Water Offset Program (primarily for new development or expansion)
☑	Implement a Water Conservation Outreach Program
☐	Hire a Water Conservation Coordinator (part-time)
☑	Apply for grant funding to aid in implementing a rebate program for water efficient appliances, fixtures, or outdoor water management
☐	Other

Objective 8: Tracking Success: How will you track or measure success through the next ten years?

Continue to monitor water usage by customer category and consider participating in the GreenStep Cities program.

Tip: The process to monitor demand reduction and/or a rate structure includes:

a) The DNR District Hydrologist or Groundwater Appropriation Hydrologist will call or visit the community the first 1-3 years after the water supply plan is completed.
b) They will discuss what activities the community is doing to conserve water and if they feel their actions are successful. The Water Supply Plan, Part 3 tables and responses will guide the discussion. For example, they will discuss efforts to reduce unaccounted for water loss if that is a problem, or go through Tables 33, 34 and 35 to discuss new initiatives.
c) The city representative and the hydrologist will discuss total per capita water use, residential per capita water use, and business/industry use. They will note trends.

d) They will also discuss options for improvement and/or collect case studies of success stories to share with other communities. One option may be to change the rate structure, but there are many other paths to successful water conservation.
e) If appropriate, they will cooperatively develop a simple work plan for the next few years, targeting a couple areas where the city might focus efforts.

A. Regulation

Complete Table 29 by selecting which regulations are used to reduce demand and improve water efficiencies. Add additional rows as needed.

Copies of adopted regulations or proposed restrictions or should be included in **Appendix 10** (a list with hyperlinks is acceptable).

Table 29. Regulations for short-term reductions in demand and long-term improvements in water efficiencies

Regulations Utilized	When is it applied (in effect)?
☑ Rainfall sensors required on landscape irrigation systems	☑ Ongoing ☐ Seasonal ☐ Only during declared Emergencies
☐ Water efficient plumbing fixtures required	☐ New Development ☐ Replacement ☐ Rebate Programs
☑ Critical/Emergency Water Deficiency ordinance	☑ Only during declared Emergencies
☑ Watering restriction requirements (time of day, allowable days, etc.)	☑ Odd/Even ☑ Time of day ☐ 2 days/week ☐ Only during declared Emergencies
☐ Water waste prohibited (for example, having a fine for irrigators spraying on the street)	☐ -Ongoing ☐ Seasonal ☐ Only during declared Emergencies
☐ Limitations on turf areas (requiring lots to have 10% - 25% of the space in natural areas)	☐ New Development ☐ Shoreland/zoning ☐ Other
☐ Soil preparation requirement s (after construction, requiring topsoil to be applied to promote good root growth)	☐ New Development ☐ Construction Projects ☐ Other
☐ Tree ratios (requiring a certain number of trees per square foot of lawn)	☐ New development ☐ Shoreland/zoning ☐ Other
☐ Permit to fill swimming pool and/or requiring pools to be covered (to prevent evaporation)	☐ Ongoing ☐ Seasonal ☐ Only during declared Emergencies
☐ Ordinances that permit stormwater irrigation, reuse of water, or other alternative water use (Note: be sure to check current plumbing codes for updates)	☐ Describe

B. Retrofitting Programs

Education and incentive programs aimed at replacing inefficient plumbing fixtures and appliances can help reduce per capita water use, as well as energy costs. It is recommended that municipal water suppliers develop a long-term plan to retrofit public buildings with water efficient plumbing fixtures and

appliances. Some water suppliers have developed partnerships with organizations having similar conservation goals, such as electric or gas suppliers, to develop cooperative rebate and retrofit programs.

A study by the AWWA Research Foundation (Residential End Uses of Water, 1999) found that the average indoor water use for a non-conserving home is 69.3 gallons per capita per day (gpcd). The average indoor water use in a conserving home is 45.2 gpcd and most of the decrease in water use is related to water efficient plumbing fixtures and appliances that can reduce water, sewer and energy costs. In Minnesota, certain electric and gas providers are required (Minnesota Statute 216B.241) to fund programs that will conserve energy resources and some utilities have distributed water efficient showerheads to customers to help reduce energy demands required to supply hot water.

Retrofitting Programs

Complete Table 30 by checking which water uses are targeted, the outreach methods used, the measures used to identify success, and any participating partners.

Table 30. Retrofitting programs (Select all that apply)

Water Use Targets	Outreach Methods	Partners
☐ low flush toilets, ☐ toilet leak tablets, ☑ low flow showerheads, ☑ faucet aerators;	☐ Education about ☑ free distribution of ☐ rebate for ☐ other	☑ Gas company ☐ Electric company ☐ Watershed organization
☐ water conserving washing machines, ☐ dish washers, ☐ water softeners;	☐ Education about ☐ free distribution of ☐ rebate for ☐ other	☐ Gas company ☐ Electric company ☐ Watershed organization
☐ rain gardens, ☑ rain barrels, ☐ Native/drought tolerant landscaping, etc. ☑ Irrigation meter	☐ Education about ☐ free distribution of ☑ rebate for ☐ other	☐ Gas company ☐ Electric company ☑ Watershed organization

Briefly discuss measures of success from the above table (e.g. number of items distributed, dollar value of rebates, gallons of water conserved, etc.):

City implemented a ban on using treated water for irrigation and the city has begun implementing an irrigation meter program.

C. Education and Information Programs

Customer education should take place in three different circumstances. First, customers should be provided information on how to conserve water and improve water use efficiencies. Second, information should be provided at appropriate times to address peak demands. Third, emergency notices and educational materials about how to reduce water use should be available for quick distribution during an emergency.

Proposed Education Programs

Complete Table 31 by selecting which methods are used to provide water conservation and information, including the frequency of program components. Select all that apply and add additional lines as needed.

Table 31. Current and Proposed Education Programs

Education Methods	General summary of topics	#/Year	Frequency
Billing inserts or tips printed on the actual bill	Educational information supplied as billing insert	3 to 4/year	☑ Ongoing ☐ Seasonal ☐ Only during declared emergencies
Consumer Confidence Reports	Report of City's water quality	1/year	☑ Ongoing ☐ Seasonal ☐ Only during declared Emergencies
Community news letters		6/year	☑ Ongoing ☐ Seasonal ☐ Only during declared Emergencies
Information at utility and public buildings		Annually	☑ Ongoing ☐ Seasonal ☐ Only during declared Emergencies
Events (children's water festivals, environmental fairs)	Medina Celebration Days – Handouts and Brochures are used.	Celebration Days	☑ Ongoing ☐ Seasonal ☐ Only during declared Emergencies
Information provided to groups that tour the water treatment facility		Open House	☑ Ongoing ☐ Seasonal ☐ Only during declared Emergencies
Website (http://www.ci.medina.mn.us/)	Information presented on City's website i.e. information on Rain Barrels, irrigation meter program, etc.	Annually	☑ Ongoing ☐ Seasonal ☐ Only during declared Emergencies
Press releases to traditional local news outlets (e.g., newspapers, radio and TV)			☐ Ongoing ☐ Seasonal ☐ Only during declared Emergencies
Social media distribution (e.g., emails, Facebook, Twitter)			☐ Ongoing ☐ Seasonal ☐ Only during declared Emergencies
Paid advertisements (e.g., billboards, print media, TV, radio, web sites, etc.)			☐ Ongoing ☐ Seasonal ☐ Only during declared Emergencies
Presentations to community groups			☐ Ongoing ☐ Seasonal

Education Methods	General summary of topics	#/Year	Frequency
			☐ Only during declared Emergencies
Staff training			☐ Ongoing ☐ Seasonal ☐ Only during declared Emergencies
Marketing rebate programs (e.g., indoor fixtures & appliances and outdoor practices)			☐ Ongoing ☐ Seasonal ☐ Only during declared Emergencies
Direct mailings (water audit/retrofit kits, showerheads, brochures)			☑ Ongoing ☐ Seasonal ☐ Only during declared Emergencies
Information kiosk at utility and public buildings			☑ Ongoing ☐ Seasonal ☐ Only during declared Emergencies
Public Service Announcements			☐ Ongoing ☐ Seasonal ☐ Only during declared Emergencies
Cable TV Programs			☐ Ongoing ☐ Seasonal ☐ Only during declared Emergencies
Demonstration projects (landscaping or plumbing)			☐ Ongoing ☐ Seasonal ☐ Only during declared Emergencies
Community education classes			☐ Ongoing ☐ Seasonal ☐ Only during declared Emergencies
Water Week promotions			☐ Ongoing ☐ Seasonal ☐ Only during declared Emergencies
Targeted efforts (large volume users, users with large increases)			☐ Ongoing ☐ Seasonal ☐ Only during declared Emergencies
Notices of ordinances		As needed	☐ Ongoing ☐ Seasonal ☑ Only during declared Emergencies
Emergency conservation notices			☐ Ongoing ☐ Seasonal ☐ Only during declared Emergencies

Briefly discuss what future education and information activities your community is considering in the future:

The City is looking into further educating residents on benefits of water conservation with direct mailings/social media posts. The City is also looking into making programs to educate school age children on water resources and the importance of water conservation in their daily routines.

Part 4. ITEMS FOR METROPOLITAN AREA COMMUNITIES

Minnesota Statute 473.859 requires WSPs to be completed for all local units of government in the seven-county Metropolitan Area as part of the local comprehensive planning process.

Much of the information in Parts 1-3 addresses water demand for the next 10 years. However, additional information is needed to address water demand through 2040, which will make the WSP consistent with the Metropolitan Land Use Planning Act, upon which the local comprehensive plans are based.

This Part 4 provides guidance to complete the WSP in a way that addresses plans for water supply through 2040.

A. Water Demand Projections through 2040

Complete Table 7 in Part 1D by filling in information about long-term water demand projections through 2040. Total Community Population projections should be consistent with the community's system statement, which can be found on the Metropolitan Council's website and which was sent to the community in September 2015.

Projected Average Day, Maximum Day, and Annual Water Demands may either be calculated using the method outlined in *Appendix 2* of the *2015 Master Water Supply Plan* or by a method developed by the individual water supplier.

B. Potential Water Supply Issues

Complete Table 10 in Part 1E by providing information about the potential water supply issues in your community, including those that might occur due to 2040 projected water use.

The *Master Water Supply Plan* provides information about potential issues for your community in *Appendix 1 (Water Supply Profiles).* This resource may be useful in completing Table 10.

You may document results of local work done to evaluate impact of planned uses by attaching a feasibility assessment or providing a citation and link to where the plan is available electronically.

C. Proposed Alternative Approaches to Meet Extended Water Demand Projections

Complete Table 12 in Part 1F with information about potential water supply infrastructure impacts (such as replacements, expansions or additions to wells/intakes, water storage and treatment capacity, distribution systems, and emergency interconnections) of extended plans for development and redevelopment, in 10-year increments through 2040. It may be useful to refer to information in the community's local Land Use Plan, if available.

Complete Table 14 in Part 1F by checking each approach your community is considering to meet future demand. For each approach your community is considering, provide information about the amount of

future water demand to be met using that approach, the timeframe to implement the approach, potential partners, and current understanding of the key benefits and challenges of the approach.

As challenges are being discussed, consider the need for: evaluation of geologic conditions (mapping, aquifer tests, modeling), identification of areas where domestic wells could be impacted, measurement and analysis of water levels & pumping rates, triggers & associated actions to protect water levels, etc.

D. Value-Added Water Supply Planning Efforts (Optional)

The following information is not required to be completed as part of the local water supply plan, but completing this can help strengthen source water protection throughout the region and help Metropolitan Council and partners in the region to better support local efforts.

Source Water Protection Strategies

Does a Drinking Water Supply Management Area for a neighboring public water supplier overlap your community? ☑ Yes ☐ No

If you answered no, skip this section. If you answered yes, please complete Table 32 with information about new water demand or land use planning-related local controls that are being considered to provide additional protection in this area.

Table 32. Local controls and schedule to protect Drinking Water Supply Management Areas

Local Control	Schedule to Implement	Potential Partners
☐ None at this time		
☑ Comprehensive planning that guides development in vulnerable drinking water supply management areas	Following the implementation of this plan	City of Orono
Zoning overlay		
☐ Other:		

Technical assistance

From your community's perspective, what are the most important topics for the Metropolitan Council to address, guided by the region's Metropolitan Area Water Supply Advisory Committee and Technical Advisory Committee, as part of its ongoing water supply planning role?

- ☑ Coordination of state, regional and local water supply planning roles
- ☐ Regional water use goals
- ☑ Water use reporting standards
- ☑ Regional and sub-regional partnership opportunities
- ☐ Identifying and prioritizing data gaps and input for regional and sub-regional analyses
- ☐ Others: _____

GLOSSARY

Agricultural/Irrigation Water Use - Water used for crop and non-crop irrigation, livestock watering, chemigation, golf course irrigation, landscape and athletic field irrigation.

Average Daily Demand - The total water pumped during the year divided by 365 days.

Calcareous Fen - Calcareous fens are rare and distinctive wetlands dependent on a constant supply of cold groundwater. Because they are dependent on groundwater and are one of the rarest natural communities in the United States, they are a protected resource in MN. Approximately 200 have been located in Minnesota. They may not be filled, drained or otherwise degraded.

Commercial/Institutional Water Use - Water used by motels, hotels, restaurants, office buildings, commercial facilities and institutions (both civilian and military). Consider maintaining separate institutional water use records for emergency planning and allocation purposes. Water used by multi-family dwellings, apartment buildings, senior housing complexes, and mobile home parks should be reported as Residential Water Use.

Commercial/Institutional/Industrial (C/I/I) Water Sold - The sum of water delivered for commercial/institutional or industrial purposes.

Conservation Rate Structure - A rate structure that encourages conservation and may include increasing block rates, seasonal rates, time of use rates, individualized goal rates, or excess use rates. If a conservation rate is applied to multifamily dwellings, the rate structure must consider each residential unit as an individual user. A community may have a separate conservation rate that only goes into effect when the community or governor declares a drought emergency. These higher rates can help to protect the city budgets during times of significantly less water usage.

Date of Maximum Daily Demand - The date of the maximum (highest) water demand. Typically this is a day in July or August.

Declining Rate Structure - Under a declining block rate structure, a consumer pays less per additional unit of water as usage increases. This rate structure does not promote water conservation.

Distribution System - Water distribution systems consist of an interconnected series of pipes, valves, storage facilities (water tanks, water towers, reservoirs), water purification facilities, pumping stations, flushing hydrants, and components that convey drinking water and meeting fire protection needs for cities, homes, schools, hospitals, businesses, industries and other facilities.

Flat Rate Structure - Flat fee rates do not vary by customer characteristics or water usage. This rate structure does not promote water conservation.

Industrial Water Use - Water used for thermonuclear power (electric utility generation) and other industrial use such as steel, chemical and allied products, paper and allied products, mining, and petroleum refining.

Low Flow Fixtures/Appliances - Plumbing fixtures and appliances that significantly reduce the amount of water released per use are labeled "low flow". These fixtures and appliances use just enough water to be effective, saving excess, clean drinking water that usually goes down the drain.

Maximum Daily Demand - The maximum (highest) amount of water used in one day.

Metered Residential Connections - The number of residential connections to the water system that have meters. For multifamily dwellings, report each residential unit as an individual user.

Percent Unmetered/Unaccounted For - Unaccounted for water use is the volume of water withdrawn from all sources minus the volume of water delivered. This value represents water "lost" by miscalculated water use due to inaccurate meters, water lost through leaks, or water that is used but unmetered or otherwise undocumented. Water used for public services such as hydrant flushing, ice skating rinks, and public swimming pools should be reported under the category "Water Supplier Services".

Population Served - The number of people who are served by the community's public water supply system. This includes the number of people in the community who are connected to the public water supply system, as well as people in neighboring communities who use water supplied by the community's public water supply system. It should not include residents in the community who have private wells or get their water from neighboring water supply.

Residential Connections - The total number of residential connections to the water system. For multifamily dwellings, report each residential unit as an individual user.

Residential Per Capita Demand - The total residential water delivered during the year divided by the population served divided by 365 days.

Residential Water Use - Water used for normal household purposes such as drinking, food preparation, bathing, washing clothes and dishes, flushing toilets, and watering lawns and gardens. Should include all water delivered to single family private residences, multi-family dwellings, apartment buildings, senior housing complexes, mobile home parks, etc.

Smart Meter - Smart meters can be used by municipalities or by individual homeowners. Smart metering generally indicates the presence of one or more of the following:

- Smart irrigation water meters are controllers that look at factors such as weather, soil, slope, etc. and adjust watering time up or down based on data. Smart controllers in a typical summer will reduce water use by 30%-50%. Just changing the spray nozzle to new efficient models can reduce water use by 40%.
- Smart Meters on customer premises that measure consumption during specific time periods and communicate it to the utility, often on a daily basis.
- A communication channel that permits the utility, at a minimum, to obtain meter reads on demand, to ascertain whether water has recently been flowing through the meter and onto the

premises, and to issue commands to the meter to perform specific tasks such as disconnecting or restricting water flow.

Total Connections - The number of connections to the public water supply system.

Total Per Capita Demand - The total amount of water withdrawn from all water supply sources during the year divided by the population served divided by 365 days.

Total Water Pumped - The cumulative amount of water withdrawn from all water supply sources during the year.

Total Water Delivered - The sum of residential, commercial, industrial, institutional, water supplier services, wholesale and other water delivered.

Ultimate (Full Build-Out) - Time period representing the community's estimated total amount and location of potential development, or when the community is fully built out at the final planned density.

Unaccounted (Non-revenue) Loss - See definitions for "percent unmetered/unaccounted for loss".

Uniform Rate Structure - A uniform rate structure charges the same price-per-unit for water usage beyond the fixed customer charge, which covers some fixed costs. The rate sends a price signal to the customer because the water bill will vary by usage. Uniform rates by class charge the same price-per-unit for all customers within a customer class (e.g. residential or non-residential). This price structure is generally considered less effective in encouraging water conservation.

Water Supplier Services - Water used for public services such as hydrant flushing, ice skating rinks, public swimming pools, city park irrigation, back-flushing at water treatment facilities, and/or other uses.

Water Used for Nonessential Purposes - Water used for lawn irrigation, golf course and park irrigation, car washes, ornamental fountains, and other non-essential uses.

Wholesale Deliveries - The amount of water delivered in bulk to other public water suppliers.

Acronyms and Initialisms

AWWA – American Water Works Association

C/I/I – Commercial/Institutional/Industrial

CIP – Capital Improvement Plan

GIS – Geographic Information System

GPCD – Gallons per capita per day

GWMA – Groundwater Management Area – North and East Metro, Straight River, Bonanza,

MDH – Minnesota Department of Health

MGD – Million gallons per day

MG – Million gallons

MGL – Maximum Contaminant Level

MnTAP – Minnesota Technical Assistance Program (University of Minnesota)

MPARS – MN/DNR Permitting and Reporting System (new electronic permitting system)

MRWA – Minnesota Rural Waters Association

SWP – Source Water Protection

WHP – Wellhead Protection

APPENDICES TO BE SUBMITTED BY THE WATER SUPPLIER

Appendix 1: Well records and maintenance summaries – see Part 1C

Appendix 2: Water level monitoring plan – see Part 1E

Appendix 3: Water level graphs for each water supply well - see Part 1E

Appendix 4: Capital Improvement Plan - see Part 1E

Appendix 5: Emergency Telephone List – see Part 2C

Appendix 6: Cooperative Agreements for Emergency Services – see Part 2C

Appendix 7: Municipal Critical Water Deficiency Ordinance – see Part 2C

Appendix 8: Graph showing annual per capita water demand for each customer category during the last ten-years – see Part 3 Objective 4

Appendix 9: Water Rate Structure – see Part 3 Objective 6

Appendix 10: Adopted or proposed regulations to reduce demand or improve water efficiency – see Part 3 Objective 7

Appendix 11: Implementation Checklist – summary of all the actions that a community is doing, or proposes to do, including estimated implementation dates – see www.mndnr.gov/watersupplyplans

Appendix 1

Well Records and Maintenance Summaries

Minnesota Unique Well Number

158087

County Hennepin
Quad Hamel
Quad ID 121D

MINNESOTA DEPARTMENT OF HEALTH

WELL AND BORING REPORT

Minnesota Statutes Chapter 1031

Entry Date 08/24/1991
Update Date
Received Date 02/05/2016

Well Name	Township	Range	Dir	Section	Subsection
MEDINA HAMEL	118	23	W	12	BDACAB

Elevation 986 ft. **Elev. Method** LiDAR 1m DEM (MNDNR)

Address

Contact 2052 24 CR MEDINA MN 55340
Well MEDINA MN 55340

Stratigraphy Information

Geological Material	From	To (ft.)	Color	Hardness
SAND	0	24	YELLOW	
SAND	24	35	BLUE	
SWAMP SAND	35	45	BLUE	
CLAY-EVEN	45	62	BLUE	
CLAY-STONEY-LOOSE	62	77	BROWN	
CLAY	77	79	BROWN	
GRAVEL-TIGHT-CLAY	79	87	DARK	
SANDY CLAY	87	97	BROWN	SOFT
SAND-COARSE	97	102		
CLAY	102	105	RED	
CLAY & LOOSE	105	112	BROWN	
CLAY-TIGHT	112	131	LT. GRY	
GRAY CLAY & BROWN	131	134		
CLEAN SAND	134	140	BROWN	
MIXED	140	142		
RED CLAY & SAND-	142	148		
BROWN CLAY & SAND-	148	153		
CLAY	153	158	WHITE	SOFT
TIGHT CLAY	158	160	WHITE	
LOOSE CLAY	160	164	WHITE	
LOOSE CLAY	164	173	YELLOW	
VERY TIGHT CLAY	173	179	PINK	
TIGHT CLAY	179	185	ORANGE	
CLAY	185	187	TAN	
WHITE W/ST. PETER ?	187	192		
JORDAN & LOOSE	192	197		
SHALE-SOME JORDAN	197	207	WHT/YEL	
SHALE	207	215	YELLOW	
LOOSE FINE JORDAN-	215	220		
FINE JORDAN W/HARD	220	236		
COARSE JORDAN W/V.	236	248	WHITE	
VERY HARD LEDGES	248	254		
CLEAN JORDAN	254	260	WHITE	M.HARD
MUDDY JORDAN	260	290	WHITE	SOFT
MUDDY JORDAN	290	300		SOFT
MUDDY JORDAN	300	310		SOFT
VERY FINE JORDAN	310	338	WHITE	
GREEN SHALE &	338	347		
PINK SAND SHARP	347	353	PNK/YEL	V.HARD
ST. LAWRENCE	353	375		
FRANCONIA	375	520		
IRONTON-GALESVILLE	520	570		
EAU CLAIRE	570	601		

Remarks MGS NO 158

Well Depth	Depth Completed	Date Well Completed
601 ft.	601 ft.	06/06/1978

Drill Method Non-specified Rotary **Drill Fluid**

Use community supply(municipal) **Status** Active

Well Hydrofractured? Yes ☐ No ☐ **From** **To**

Casing Type Single casing **Joint** Welded
Drive Shoe? Yes ☒ No ☐ **Above/Below**

Casing Diameter	Weight	Hole Diameter
8 in. To 353 ft.	28.5 lbs./ft.	11. in. To 353 ft.
		8 in. To 601 ft.

Open Hole From 353 ft. To 601 ft.

Screen? ☐ **Type** **Make**

Static Water Level
104. ft. Land surface Measure 06/06/1978

Pumping Level (below land surface)
181. ft. 54 hrs. Pumping at 210 g.p.m.

Wellhead Completion
Pitless adapter manufacturer Model
☐ Casing Protection ☒ 12 in. above grade
☐ At-grade (Environmental Wells and Borings ONLY)

Grouting Information Well Grouted? ☒ Yes ☐ No ☐ Not Specified

Material	Amount	From	To
Neat Cement		ft.	ft.

Nearest Known Source of Contamination
feet Direction Type
Well disinfected upon completion? ☒ Yes ☐ No

Pump ☒ Not Installed Date Installed
Manufacturer's name
Model Number HP Volt
Length of drop pipe ft Capacity g.p. Typ

Abandoned
Does property have any not in use and not sealed well(s)? ☐ Yes ☐ No

Variance
Was a variance granted from the MDH for this well? ☐ Yes ☐ No

Miscellaneous
First Bedrock St.Peter Sandstone Aquifer Tunnel City-
Last Strat Eau Claire Formation Depth to Bedrock 192 ft
Located by Minnesota Department of Health
Locate Method GPS SA On (averaged)
System UTM - Mad83, Zone 15, Meters X 457962 Y 4988241
Unique Number Verification Information from Inpute Date 06/16/1999

Angled Drill Hole

Well Contractor
Stevens Well Co. 27194 SALONEK, K.
Licensee Business Lic. or Reg. No. Name of Driller

Minnesota Well Index Report **158087**

Printed on 02/23/2016
HE-01205-15

Minnesota Unique Well Number

122239

County Hennepin
Quad Hamel
Quad ID 121D

MINNESOTA DEPARTMENT OF HEALTH

WELL AND BORING REPORT

Minnesota Statutes Chapter 1031

Entry Date 08/24/1991
Update Date
Received Date 02/05/2016

Well Name	Township	Range	Dir	Section	Subsection
MEDINA HAMEL	118	23	W	12	BCCCBA

Elevation 1010 **Elev. Method** 7.5 minute topographic map (+/- 5 feet)

Address

Contact 2052 24 CR MEDINA MN 55340
Well PINTO RD MEDINA MN 55340

Stratigraphy Information

Geological Material	From	To (ft.)	Color	Hardness
SAND	0	10	BROWN	
CLAY	10	25	TAN/BRN	
CLAY	25	41	GRAY	
CLAY	41	60	GRAY	
GRAVEL & SOME CLAY	60	70	VARIED	
CLAY	70	80	GRAY	
CLAY	80	101	BROWN	
CLAY & GRAVEL	101	129	BROWN	
BOULDER	129	131	WHITE	
GRAVEL & SOME CLAY	131	135	DARK	
GRAVEL	135	155	DARK	
CLAY & GRAVEL	155	175	GRAY	
CLAY	175	181	GREEN	
CLAY	181	235	TAN/YEL	
CLAY	235	261	BROWN	
SHALE & ST. PETER	261	269	GRN/YEL	
SANDSTONE	269	275	YEL/BLK	
SHALE	275	276	GREEN	
SANDSTONE	276	277	TAN/BLK	
SHALE	277	279	WHT/GRN	
SANDSTONE	279	285	TAN/BLK	
ST. PETER	285	312	TAN	SOFT
ST. PETER	312	320	GRN/RED	SOFT
ST. PETER	320	345	GRN/RED	SOFT
JORDAN SANDSTONE	345	360	YEL/TAN	
JORDAN SANDSTONE	360	369	GREEN	
JORDAN SANDSTONE	369	370	GREEN	
ST. LAWRENCE	370	390	RED/GRN	
FRANCONIA	390	392	GREEN	
FRANCONIA	392	465	GREEN	
FRANCONIA	465	475	RED/GRN	
FRANCONIA	475	500	PUR/GRN	
FRANCONIA	500	515	TAN/GRN	
IRONTON-GALEVILLE	515	525	RED/TAN	
IRONTON-GALEVILLE	525	538	GRAY	
IRONTON-GALEVILLE	538	585	GRAY	
IRONTON-GALEVILLE	585	590	GRN/TAN	
EAU CLAIRE	590	610	PUR/RED	
EAU CLAIRE GREEN	610	668	VARIED	
EAU CLAIRE GREEN	668	670	VARIED	
MT. SIMON	670	685	RED/PNK	
MT. SIMON	685	690	GRN/TAN	
MT. SIMON	690	720	GRAY	
MT. SIMON	720	790		
MT. SIMON	790	809	GRAY	
FOND DU LAC SHALE	809	814	RED	
FOND DU LAC SHALE	814	825	RED	

Remarks
MAG S NO.2061 GAMMA LOGGED 5-18-1983.

Well Depth 825 ft. **Depth Completed** 590 ft. **Date Well Completed** 06/02/1983
Drill Method Non-specified Rotary **Drill Fluid**

Use community supply(municipal) **Status** Active

Well Hydrofractured? Yes ☐ No ☐ **From** **To**

Casing Type Single casing **Joint** Welded
Drive Shoe? Yes ☒ No ☐ **Above/Below** 0 ft.

Casing Diameter **Weight**
10 in. To 420 ft. 40.4 lbs./ft.

Open Hole From 420 ft. To 825 ft.

Screen? ☐ **Type** **Make**

Static Water Level
158 ft. Land surface Measure 06/15/1983

Pumping Level (below land surface)
208 ft. 80 hrs. Pumping at 120 g.p.m.

Wellhead Completion
Pitless adapter manufacturer Model
☐ Casing Protection ☒ 12 in. above grade
☐ At-grade (Environmental Wells and Borings ONLY)

Grouting Information Well Grouted? ☒ Yes ☐ No ☐ Not Specified

Material	Amount		From	To
Neat Cement	2	Cubic yards	0 ft.	60 ft.
Well grouted, type unknown			590 ft.	825 ft.

Nearest Known Source of Contamination
feet Direction Type
Well disinfected upon completion? ☒ Yes ☐ No

Pump ☒ Not Installed Date Installed
Manufacturer's name
Model Number HP Volt
Length of drop pipe ft Capacity g.p. Typ

Abandoned
Does property have any not in use and not sealed well(s)? ☐ Yes ☐ No

Variance
Was a variance granted from the MDH for this well? ☐ Yes ☐ No

Miscellaneous
First Bedrock St.Peter Sandstone Aquifer Tunnel City-
Last Strat Solor Church Formation Depth to Bedrock 261 ft
Located by Minnesota Department of Health
Locate Method GPS SA On (averaged)
System UTM - Mad83, Zone 15, Meters X 457339 Y 4988019
Unique Number Verification Information from Inpute Date 06/16/1999

Angled Drill Hole

Well Contractor
Renner E.H. & Sons 02015 RENNER, R.
Licensee Business Lic. or Reg. No. Name of Driller

Minnesota Well Index Report **122239**

Printed on 02/23/2016
HE-01205-15

Minnesota Unique Well Number

520048

County Hennepin
Quad Hamel
Quad ID 121D

MINNESOTA DEPARTMENT OF HEALTH

WELL AND BORING REPORT

Minnesota Statutes Chapter 1031

Entry Date 02/09/1994
Update Date
Received Date 04/08/2015

Well Name	Township	Range	Dir	Section	Subsection
MEDINA HAMEL	118	23	W	12	BCCCBC

Elevation 1010 **Elev. Method** 7.5 minute topographic map (+/- 5 feet)

Address

Contact 2052 24 CR MEDINA MN 55340
Well 3600 PINTO DR MEDINA MN 55340

Stratigraphy Information

Geological Material	From	To (ft.)	Color	Hardness
SAND	0	10	BROWN	SOFT
CLAY	10	30	GRAY	SOFT
CLAY & STONES	30	80	GRAY	SOFT
PACK SAND/GRAVEL	80	135	BROWN	MEDIUM
SAND/GRAVEL	135	160	BROWN	MEDIUM
CLAY/STONES	160	175	GRAY	MEDIUM
SHALE	175	220	GREEN	HARD
SHALE/SANDSTONE	220	260	BROWN	HARD
SANDSTONE	260	270	BLU/GRN	MEDIUM
SANDSTONE	270	277	TAN/BRN	MEDIUM
SANDSTONE	277	280	TAN/BRN	MEDIUM
SANDSTONE	280	284	TAN	V.HARD
SANDSTONE	284	305	TAN	SFT-MED
SANDSTONE	305	365	TAN/BLU	SOFT
SHALE/SANDSTONE	365	370	BLUE	
ST. LAWRENCE	370	372	PINK	HARD
ST. LAWRENCE	372	390	PINK	HARD
FRANCONIA	390	410	VARIED	MED-HRD
FRANCONIA	410	461	VARIED	MED-HRD
STICKY SHALE	461	544	GREEN	HARD
STICKY SHALE	544	590	GREEN	HARD
EAU CLAIRE	590	667	BRN/PUR	HARD
MT. SIMON	667	672	TAN/RED	HARD
MT. SIMON	672	683	TAN/RED	HARD
MT. SIMON	683	695	TAN	MEDIUM
MT. SIMON SHALE	695	705	BLUE	MEDIUM
MT. SIMON	705	735	TAN	SOFT
MT. SIMON	735	770	TAN	V.SOFT

Remarks

GAMMA LOGGED 6-28-1993. M.G.S. NO.3459.

Well Depth 770 ft. **Depth Completed** 770 ft. **Date Well Completed** 11/10/1993

Drill Method Cable Tool **Drill Fluid** Water

Use community supply(municipal) **Status** Active

Well Hydrofractured? **Yes** ☐ **No** ☐ **From** **To**

Casing Type Step down **Joint** Welded
Drive Shoe? **Yes** ☒ **No** ☐ **Above/Below** 0 ft.

Casing Diameter		Weight		Hole Diameter	
30 in. To	228 ft.	118. lbs./ft.		30 in. To	282 ft.
16 in. To	683 ft.	62.6 lbs./ft.		24 in. To	363 ft.
20 in. To	373 ft.	78.6 lbs./ft.		17 in. To	770 ft.
24 in. To	284 ft.	94.6 lbs./ft.			

Open Hole From 683 ft. To 770 ft.

Screen? ☐ **Type** **Make**

Static Water Level
322 ft. Land surface Measure 11/09/1993

Pumping Level (below land surface)
393 ft. 9 hrs. Pumping at 1080 g.p.m.

Wellhead Completion
Pitless adapter manufacturer BAKER Model
☐ Casing Protection ☒ 12 in. above grade
☐ At-grade (Environmental Wells and Borings ONLY)

Grouting Information Well Grouted? ☒ Yes ☐ No ☐ Not Specified

Material	Amount		From	To
Neat Cement	17	Cubic yards	0 ft.	282 ft.
Neat Cement	24	Cubic yards	0 ft.	683 ft.
Neat Cement	30	Cubic yards	0 ft.	360 ft.

Nearest Known Source of Contamination
feet Direction Type
Well disinfected upon completion? ☒ Yes ☐ No

Pump ☐ Not Installed Date Installed 02/00/1994
Manufacturer's name AMERICAN
Model Number 12L55-7 HP 125 Volt 460
Length of drop pipe 400 ft Capacity 600 g.p. Typ Submersible

Abandoned
Does property have any not in use and not sealed well(s)? ☐ Yes ☒ No

Variance
Was a variance granted from the MDH for this well? ☐ Yes ☐ No

Miscellaneous
First Bedrock Jordan Sandstone Aquifer Mt.Simon
Last Strat Mt.Simon Sandstone Depth to Bedrock 277 ft
Located by Minnesota Department of Health
Locate Method GPS SA On (averaged)
System UTM - Mad83, Zone 15, Meters X 457317 Y 4988001
Unique Number Verification Information from Inpute Date 06/16/1999

Angled Drill Hole

Well Contractor
Renner E.H. Well 71015 SIGAFOOS, R.
Licensee Business Lic. or Reg. No. Name of Driller

Minnesota Unique Well Number

709925

County Hennepin
Quad Hamel
Quad ID 121D

MINNESOTA DEPARTMENT OF HEALTH

WELL AND BORING REPORT

Minnesota Statutes Chapter 1031

Entry Date
Update Date 09/30/2004
Received Date 02/08/2016

Well Name	Township	Range	Dir	Section	Subsection
MEDINA 5	118	23	W	12	DDDDCA

Elevation 1011 **Elev. Method** 7.5 minute topographic map (+/- 5 feet)

Address

Contact 2052 24 CR MEDINA MN 55340
Well 3300 BROCKTON LA MEDINA MN 55340

Stratigraphy Information

Geological Material	From	To (ft.)	Color	Hardness
TOP SOIL	0	2	BLACK	
SANDY CLAY	2	14	BROWN	
SANDY CLAY	14	41	GRAY	
SANDY CLAY	41	50	GRAY	HARD
SAND	50	51	GRAY	
SANDY CLAY	51	57	GRAY	HARD
SAND	57	59	VARIED	
SANDY CLAY	59	86	GRAY	
SAND & GRAVEL	86	93	GRAY	
ROCK	93	94	WHITE	
GRAVEL & CLAY	94	100	GRAY	
SAND & GRAVEL	100	120	BROWN	
SAND	120	234	BROWN	
SAND W/CLAY	234	238	BROWN	
SANDY CLAY	238	242	GRAY	

Remarks
GAMMA LOGGED 6-15-2004 BY JIM TRAEN.

Well Depth 242 ft. **Depth Completed** 240 ft. **Date Well Completed** 08/12/2004

Drill Method Non-specified Rotary **Drill Fluid** Bentonite

Use community supply(municipal) **Status** Active

Well Hydrofractured? **Yes** ☐ **No** ☒ **From** **To**

Casing Type Single casing **Joint** Welded
Drive Shoe? **Yes** ☐ **No** ☒ **Above/Below** 1 ft.

Casing Diameter	Weight	Hole Diameter
12 in. To 195 ft.	49.5 lbs./ft.	17. in. To 242 ft.

Open Hole From ft. To ft.

Screen? ☒ **Type** stainless **Make** JOHNSON

Diameter	Slot/Gauze	Length	Set
12 in.	30	45 ft.	195 ft. 240 ft.

Static Water Level
106 ft. Land surface Measure 08/12/2004

Pumping Level (below land surface)

Wellhead Completion
Pitless adapter manufacturer Model
☒ Casing Protection ☒ 12 in. above grade
☐ At-grade (Environmental Wells and Borings ONLY)

Grouting Information Well Grouted? ☒ Yes ☐ No ☐ Not Specified

Material	Amount	From	To
Neat Cement	2.25 Cubic yards	ft.	185 ft.

Nearest Known Source of Contamination
0 feet Direction Type
Well disinfected upon completion? ☒ Yes ☐ No

Pump ☒ Not Installed Date Installed
Manufacturer's name
Model Number HP Volt
Length of drop pipe ft Capacity g.p. Typ

Abandoned
Does property have any not in use and not sealed well(s)? ☐ Yes ☒ No

Variance
Was a variance granted from the MDH for this well? ☐ Yes ☒ No

Miscellaneous
First Bedrock Aquifer Quat. Buried
Last Strat clay+sand-gray Depth to Bedrock ft
Located by Minnesota Geological Survey
Locate Method Digitization (Screen) - Map (1:24,000)
System UTM - Mad83, Zone 15, Meters X 458813 Y 4987139
Unique Number Verification Tag on well Inpute Date 06/16/2004

Angled Drill Hole

Well Contractor

Licensee Business	Lic. or Reg. No.	Name of Driller
L.t.p. Enterprises, Inc.	91686	RANUM, C.

Minnesota Unique Well Number

747666

County Hennepin
Quad Hamel
Quad ID 121D

MINNESOTA DEPARTMENT OF HEALTH

WELL AND BORING REPORT

Minnesota Statutes Chapter 1031

Entry Date 01/05/2007
Update Date 07/13/2007
Received Date 04/16/2015

Well Name	Township	Range	Dir	Section	Subsection
MEDINA 6	118	23	W	12	DDDCCA

Elevation 1009 **Elev. Method** 7.5 minute topographic map (+/- 5 feet)

Address

Contact 2052 24 CR MEDINA MN 55340
Well 3200 BROCKTON LA MEDINA MN 55340

Stratigraphy Information

Geological Material	From	To (ft.)	Color	Hardness
TOP SOIL	0	5	BLACK	SOFT
CLAY	5	60	BRN/GRY	SOFT
SILTY CLAY AND	60	120	BROWN	MEDIUM
SILTY SANDY CLAY &	120	224	RED	MEDIUM
SANDSTONE & SHALE	224	230		MEDIUM
SANDSTONE & SHALE	230	310		MEDIUM
SANDSTONE & SHALE	310	312		MEDIUM
SANDSTONE	312	375	TAN	MEDIUM
SANDSTONE & SHALE	375	385		MEDIUM

Remarks

GAMMA LOGGED 12-28-2006. M.G.S. NO. 4648. LOGGED BY JIM

Well Depth 385 ft. **Depth Completed** 378 ft. **Date Well Completed** 05/01/2007

Drill Method Non-specified Rotary **Drill Fluid** Bentonite

Use community supply(municipal) **Status** Active

Well Hydrofractured? Yes ☐ No ☒ **From** **To**

Casing Type Step down **Joint** Welded
Drive Shoe? Yes ☐ No ☒ **Above/Below**

Casing Diameter		Weight		Hole Diameter	
14 in. To	311 ft.	78.6 lbs./ft.		20 in. To	19 ft.
20 in. To	19 ft.	54.6 lbs./ft.		19. in. To	312 ft.
				12. in. To	385 ft.

Open Hole From ft. To ft.

Screen? ☒ **Type** stainless **Make** JOHNSON

Diameter	Slot/Gauze	Length	Set	
8 in.	40	66 ft.	312 ft.	378 ft.

Static Water Level
109 ft. Land surface Measure 03/20/2007

Pumping Level (below land surface)
158 ft. 4 hrs. Pumping at 400 g.p.m.

Wellhead Completion
Pitless adapter manufacturer Model
☐ Casing Protection ☒ 12 in. above grade
☐ At-grade (Environmental Wells and Borings ONLY)

Grouting Information Well Grouted? ☒ Yes ☐ No ☐ Not Specified

Material	Amount		From	To
Neat Cement	14	Cubic yards	ft. 311	ft.

Nearest Known Source of Contamination
60 feet South Direction Body of water Type
Well disinfected upon completion? ☒ Yes ☐ No

Pump ☒ Not Installed Date Installed
Manufacturer's name
Model Number HP Volt
Length of drop pipe ft Capacity g.p. Typ

Abandoned
Does property have any not in use and not sealed well(s)? ☐ Yes ☐ No

Variance
Was a variance granted from the MDH for this well? ☐ Yes ☒ No

Miscellaneous
First Bedrock St.Peter Sandstone Aquifer Jordan
Last Strat Jordan Sandstone Depth to Bedrock 230 ft
Located by Minnesota Geological Survey
Locate Method Digitization (Screen) - Map (1:24,000)
System UTM - Mad83, Zone 15, Meters X 458710 Y 4987132
Unique Number Verification Info/GPS from data Inpute Date 01/05/2007

Angled Drill Hole

Well Contractor

Licensee Business	Lic. or Reg. No.	Name of Driller
Bergerson Caswell, Inc.	1767	HOLMEN, G.

Minnesota Unique Well Number

759809

County Hennepin
Quad Hamel
Quad ID 121D

MINNESOTA DEPARTMENT OF HEALTH

WELL AND BORING REPORT

Minnesota Statutes Chapter 1031

Entry Date 03/10/2008
Update Date 09/24/2008
Received Date 02/10/2016

Well Name	Township	Range	Dir	Section	Subsection
MEDINA 7	118	23	W	12	DDBBCA

Elevation 1016 **Elev. Method** 7.5 minute topographic map (+/- 5 feet)

Address

Contact 2052 24 CR MEDINA MN 55340
Well 3200 MILL ST MEDINA MN 55340

Stratigraphy Information

Geological Material	From	To (ft.)	Color	Hardness
CLAY/SILT	0	10	BLACK	SOFT
CLAY	10	50	GRAY	SOFT
CLAY/GRAVEL	50	60	GRAY	MEDIUM
CLAY	60	80	GRAY	MEDIUM
CLAY-ROCKS	80	150	RED	MEDIUM
SILTY-ROCKS	150	165	RED	SOFT
SANDY CLAY	165	186	RED	MEDIUM
SANDY CLAY	186	227	RED	MEDIUM
SHALE	227	248	RED	MEDIUM
SHALE & SANDSTONE	248	303	WHITE	MEDIUM
SHALE & SANDSTONE	303	307	WHITE	MEDIUM
SANDSTONE	307	320	WHITE	HARD
SHALEY SANDSTONE	320	340	RED/WHT	HARD
SANDSTONE	340	405	WHITE	MEDIUM
SHALE LIMESTONE	405	410		HARD

Remarks

GAMMA LOGGED 3-3-2008. M.G.S. NO. 4795. LOGGED BY JIM
155 BAGS OF EA CLAIR # 40 USED TO GRAVEL PACK 8"
08-E-25038
MEDINA WELL NO. 7
PWSID 1270023

Well Depth 410 ft. **Depth Completed** 405 ft. **Date Well Completed** 06/09/2008

Drill Method Non-specified Rotary **Drill Fluid** Bentonite

Use community supply(municipal) **Status** Active

Well Hydrofractured? **Yes** ☐ **No** ☒ **From** **To**

Casing Type Single casing **Joint** Welded
Drive Shoe? **Yes** ☐ **No** ☒ **Above/Below**

Casing Diameter	Weight	Hole Diameter
14 in. To 312 ft.	54.5 lbs./ft.	22 in. To 310 ft.
		14 in. To 410 ft.

Open Hole From ft. To ft.

Screen? ☒ **Type** stainless **Make** JOHNSON

Diameter	Slot/Gauze	Length	Set	
8 in.	40	93 ft.	312 ft.	405 ft.

Static Water Level
119 ft. Land surface Measure 06/09/2008

Pumping Level (below land surface)
187 ft. 24 hrs. Pumping at 800 g.p.m.

Wellhead Completion
Pitless adapter manufacturer Model
☒ Casing Protection ☒ 12 in. above grade
☐ At-grade (Environmental Wells and Borings ONLY)

Grouting Information Well Grouted? ☒ Yes ☐ No ☐ Not Specified

Material	Amount		From	To
Neat Cement	27	Cubic yards	ft. 310	ft.

Nearest Known Source of Contamination
125 feet Northwes Direction Body of water Type
Well disinfected upon completion? ☒ Yes ☐ No

Pump ☒ Not Installed Date Installed
Manufacturer's name
Model Number HP Volt
Length of drop pipe ft Capacity g.p. Typ

Abandoned
Does property have any not in use and not sealed well(s)? ☐ Yes ☒ No

Variance
Was a variance granted from the MDH for this well? ☐ Yes ☒ No

Miscellaneous
First Bedrock St.Peter Sandstone Aquifer Jordan
Last Strat St.Lawrence Formation Depth to Bedrock 186 ft
Located by Minnesota Geological Survey
Locate Method Digitization (Screen) - Map (1:24,000)
System UTM - Mad83, Zone 15, Meters X 458518 Y 4987464
Unique Number Verification Info/GPS from data Inpute Date 03/10/2008

Angled Drill Hole

Well Contractor
Bergerson Caswell, Inc. 1767 HOLMEN, G.
Licensee Business Lic. or Reg. No. Name of Driller

Minnesota Unique Well Number

814752

County Hennepin
Quad Hamel
Quad ID 121D

MINNESOTA DEPARTMENT OF HEALTH

WELL AND BORING REPORT

Minnesota Statutes Chapter 1031

Entry Date 12/17/2015
Update Date 01/15/2016
Received Date

Well Name	Township	Range	Dir	Section	Subsection
MEDINA 8	118	23	W	13	AADABD

Elevation 1011 **Elev. Method** 7.5 minute topographic map (+/- 5 feet)

Address

Contact 2052 24 CR MEDINA MN 55340
Well MEDINA MN 55340

Stratigraphy Information

Geological Material	From	To (ft.)	Color	Hardness
TOPSOIL	0	2	BLACK	SOFT
CLAY	2	10	YELLOW	SOFT
GRAVEL & CLAY	10	20	BRN/YEL	MEDIUM
CLAY	20	25	BROWN	SOFT
CLAY & GRAVEL	25	65	GRY/BRN	SOFT
CLAY & GRAVEL	65	95	BROWN	SOFT
GRAVEL WITH CLAY	95	104	GRY/BRN	MEDIUM
CLAY & ROCKS MIX	104	140	GRY/BRN	HARD
GRAVEL WITH CLAY	140	155	GRY/BRN	MEDIUM
COARSE SAND &	155	180	BROWN	SOFT
SILT	180	213	GRAY	MEDIUM
COARSE SAND &	213	235	BROWN	SOFT
FINE SAND	235	255	BROWN	SOFT
MED SAND	255	257	BROWN	SOFT
FINE SAND	257	265	BROWN	SOFT
MED & COARSE SAND	265	275	BROWN	SOFT
FINE & MED SAND	275	300	BROWN	SOFT
FINE & COARSE SAND	300	305	BROWN	SOFT
FINE SAND	305	315	BROWN	SOFT
FINE & MED SAND	315	325	BROWN	SOFT
FINE & MED & COARSE	325	330	BROWN	SOFT
FINE SAND	330	340	BROWN	SOFT
FINE & MED SAND	340	363	BROWN	SOFT
CLAY	363	366	GRAY	SOFT
FINE & COARSE SAND	366	375	BRN/GRY	SOFT
FINE SAND & COARSE	375	380	BRN/GRY	SOFT
FINE & COARSE SAND	380	385	BRN/GRY	SOFT
FINE SAND	385	395	BRN/GRY	SOFT
FINE SAND & COARSE	395	398	BRN/GRY	MED-HRD

Remarks

DRILLERS: TONY TRAUT AND NICK ANDERSON.
GAMMA LOGGED 1-6-2016. M.G.S. NO. 5541. LOGGED BY JIM TRAEN.

Well Depth 398 ft. **Depth Completed** 398 ft. **Date Well Completed** 09/30/2015

Drill Method Dual Rotary **Drill Fluid** Water

Use community supply(municipal) **Status** Active

Well Hydrofractured? **Yes** ☐ **No** ☒ **From** **To**

Casing Type Step down **Joint** Welded
Drive Shoe? **Yes** ☒ **No** ☐ **Above/Below**

Casing Diameter		Weight	
24 in. To	314 ft.	94	lbs./ft.
18 in. To	318 ft.	70	lbs./ft.

Open Hole From ft. To ft.

Screen? ☒ **Type** stainless **Make** JOHNSON

Diameter	Slot/Gauze	Length	Set	
12 in.	30	85 ft.	313 ft.	398 ft.

Static Water Level
113 ft. land surface Measure 09/30/2015

Pumping Level (below land surface)
137 ft. 1 hrs. Pumping at 400 g.p.m.

Wellhead Completion
Pitless adapter manufacturer Model
☐ Casing Protection ☒ 12 in. above grade
☐ At-grade (Environmental Wells and Borings ONLY)

Grouting Information Well Grouted? ☒ Yes ☐ No ☐ Not Specified

Material	Amount	From	To
neat cement	16.5 Cubic yards	ft.	314 ft.

Nearest Known Source of Contamination
300 feet West Direction Septic tank/drain field Type
Well disinfected upon completion? ☒ Yes ☐ No

Pump ☒ Not Installed Date Installed
Manufacturer's name
Model Number HP Volt
Length of drop pipe ft Capacity g.p. Typ

Abandoned
Does property have any not in use and not sealed well(s)? ☐ Yes ☒ No

Variance
Was a variance granted from the MDH for this well? ☐ Yes ☒ No

Miscellaneous
First Bedrock Aquifer Quat. buried
Last Strat sand +larger Depth to Bedrock ft
Located by Minnesota Geological Survey
Locate Method Digitization (Screen) - Map (1:24,000)
System UTM - Mad83, Zone 15, Meters X 458815 Y 4986857
Unique Number Verification Info/GPS from data Inpute Date 01/15/2016

Angled Drill Hole

Well Contractor

Mark J Traut Wells, Inc.	1404	SEE REMARKS
Licensee Business	Lic. or Reg. No.	Name of Driller

Minnesota Unique Well Number

100219

County Hennepin
Quad Rockford
Quad ID 121C

MINNESOTA DEPARTMENT OF HEALTH

WELL AND BORING REPORT

Minnesota Statutes Chapter 1031

Entry Date 08/24/1991
Update Date
Received Date 04/12/2015

Well Name	Township	Range	Dir	Section	Subsection
MEDINA	118	23	W	18	BABCCA

Elevation 1001 **Elev. Method** 7.5 minute topographic map (+/- 5 feet)

Address

Contact 2052 24 CR MEDINA MN 55340
Well MEDINA MN 55340

Stratigraphy Information

Geological Material	From	To (ft.)	Color	Hardness
SANDY CLAY	0	14	YELLOW	
SANDY CLAY	14	58	BLUE	
SAND WITH LITTLE	58	70	BROWN	
SAND & GRAVEL	70	95	BROWN	
CLAY-SANDY	95	110	RED	
SAND	110	130	GRAY	
CLAY-VERY SANDY	130	133	GRAY	
SAND-FINE	133	155		
COARSE SAND &	155	240		

Remarks

Well Depth 240 ft. **Depth Completed** 240 ft. **Date Well Completed** 08/27/1975

Drill Method Non-specified Rotary **Drill Fluid**

Use community supply(municipal) **Status** Active

Well Hydrofractured? **Yes** ☐ **No** ☐ **From** **To**

Casing Type Single casing **Joint** Welded
Drive Shoe? **Yes** ☐ **No** ☒ **Above/Below** 2.3 ft.

Casing Diameter		Weight	
12 in. To	200 ft.	49.5	lbs./ft.

Open Hole From ft. To ft.

Screen? ☒ **Type** stainless **Make** JOHNSON

Diameter	Slot/Gauze	Length		Set			
10. in.	100	40	ft.	200	ft.	240	ft.

Static Water Level
75.9 ft. Land surface Measure 04/04/1988

Pumping Level (below land surface)
80.3 ft. 5 hrs. Pumping at 1250 g.p.m.

Wellhead Completion
Pitless adapter manufacturer Model
☐ Casing Protection ☒ 12 in. above grade
☐ At-grade (Environmental Wells and Borings ONLY)

Grouting Information Well Grouted? ☒ Yes ☐ No ☐ Not Specified

Material	Amount		From	To
Neat Cement	6.5	Cubic yards	0 ft.	200 ft.

Nearest Known Source of Contamination
feet Direction Type
Well disinfected upon completion? ☒ Yes ☐ No

Pump ☐ Not Installed Date Installed 12/19/1975
Manufacturer's name TAIT AC
Model Number 10ECL HP 40 Volt 460
Length of drop pipe 120 ft Capacity 625 g.p. Typ Turbine

Abandoned
Does property have any not in use and not sealed well(s)? ☐ Yes ☐ No

Variance
Was a variance granted from the MDH for this well? ☐ Yes ☐ No

Miscellaneous
First Bedrock Aquifer Quat. Buried
Last Strat sand +larger Depth to Bedrock ft
Located by Minnesota Department of Health
Locate Method GPS SA Off (averaged)
System UTM - Mad83, Zone 15, Meters X 449594 Y 4987073
Unique Number Verification Information from Inpute Date 05/19/2003

Angled Drill Hole

Well Contractor
Stevens Well Co. 27194 NASS. R.
Licensee Business Lic. or Reg. No. Name of Driller

Minnesota Unique Well Number

448765

County Hennepin
Quad Rockford
Quad ID 121C

MINNESOTA DEPARTMENT OF HEALTH

WELL AND BORING REPORT

Minnesota Statutes Chapter 1031

Entry Date 06/29/1992
Update Date
Received Date 04/12/2015

Well Name	Township	Range	Dir	Section	Subsection
MEDINA	118	23	W	18	BABCCA

Elevation 1001 **Elev. Method** 7.5 minute topographic map (+/- 5 feet)

Address

Contact 2052 24 CR MEDINA MN 55340
Well MEDINA MN 55340

Stratigraphy Information

Geological Material	From	To (ft.)	Color	Hardness
CLAY	0	15	YELLOW	
CLAY	15	19	BLUE	
BOULDER	19	20	WHT/BLK	
CLAY	20	30	BLUE	
CLAY-SAND	30	45	BLU/BRN	
SHALE-GRAVEL	45	55	RED/BRN	
SAND-GRAVEL	55	75	BROWN	
FINE SAND	75	80	BROWN	
SHALE-GRAVEL	80	115	RED/BRN	
GRAVEL-SAND	115	120	RED/BLK	
FINE SAND	120	145	BROWN	
GRAVEL-SAND VERY	145	250	RED/BLK	

Remarks

LOCATED BY MDH FOR THE TRITIUM STUDY.
LOST CIRCULATION AT 145 FT.
MEDINA NO.2.

Well Depth 250 ft. **Depth Completed** 241 ft. **Date Well Completed** 08/25/1988

Drill Method Non-specified Rotary **Drill Fluid** Bentonite

Use community supply(municipal) **Status** Active

Well Hydrofractured? Yes ☐ No ☐ **From** **To**

Casing Type Single casing **Joint** Welded
Drive Shoe? Yes ☐ No ☒ **Above/Below** 2 ft.

Casing Diameter		Weight		Hole Diameter	
8 in. To 201 ft.		28.5 lbs./ft.		12 in. To 203 ft.	
				8 in. To 243 ft.	

Open Hole From ft. To ft.

Screen? ☒ **Type** telescoping **Make** JOHNSON

Diameter	Slot/Gauze	Length	Set	
8 in.	100	40 ft.	201 ft.	241 ft.

Static Water Level
73.6 ft. Land surface Measure 08/25/1988

Pumping Level (below land surface)
ft. hrs. Pumping at 600 g.p.m.

Wellhead Completion
Pitless adapter manufacturer Model
☐ Casing Protection ☒ 12 in. above grade
☐ At-grade (Environmental Wells and Borings ONLY)

Grouting Information Well Grouted? ☒ Yes ☐ No ☐ Not Specified

Material	Amount		From	To
Neat Cement	3	Cubic yards	10 ft.	201 ft.

Nearest Known Source of Contamination
feet Direction Type
Well disinfected upon completion? ☒ Yes ☐ No

Pump ☐ Not Installed Date Installed 11/14/1988
Manufacturer's name GRUNDFOS
Model Number 135S100-6 HP 10 Volt 460
Length of drop pipe 126 ft Capacity 100 g.p. Typ Submersible

Abandoned
Does property have any not in use and not sealed well(s)? ☐ Yes ☒ No

Variance
Was a variance granted from the MDH for this well? ☐ Yes ☐ No

Miscellaneous
First Bedrock Aquifer Quat. Buried
Last Strat sand +larger Depth to Bedrock ft
Located by Minnesota Department of Health
Locate Method GPS SA On (averaged)
System UTM - Mad83, Zone 15, Meters X 449600 Y 4987075
Unique Number Verification Information from Inpute Date 06/16/1999

Angled Drill Hole

Well Contractor

Stevens Well Co.	27194	RIVERS, M.
Licensee Business	Lic. or Reg. No.	Name of Driller

Minnesota Unique Well Number

208009

County Hennepin
Quad Hamel
Quad ID 121D

MINNESOTA DEPARTMENT OF HEALTH

WELL AND BORING REPORT

Minnesota Statutes Chapter 1031

Entry Date 08/24/1991
Update Date
Received Date 04/19/2015

Well Name	Township	Range	Dir	Section	Subsection
MEDINA	118	23	W	28	ACAAAA

Elevation 1053 **Elev. Method** 7.5 minute topographic map (+/- 5 feet)

Address

Contact 2052 24 CR MEDINA MN 55340
Well MEDINA MN 55340

Stratigraphy Information

Geological Material	From	To (ft.)	Color	Hardness
CLAY & GRAVEL	0	153	GRAY	
MUDDY SAND &	153	183		
WATER SAND &	183	203		
CLAY	203	205		

Remarks

Well Depth 205 ft. **Depth Completed** 205 ft. **Date Well Completed** 06/21/1961

Drill Method **Drill Fluid**

Use community supply(municipal) **Status** Active

Well Hydrofractured? **Yes** ☐ **No** ☐ **From** **To**

Casing Type Single casing **Joint**
Drive Shoe? **Yes** ☐ **No** ☐ **Above/Below**

Casing Diameter **Weight**
6 in. To 187 ft. lbs./ft.

Open Hole From ft. To ft.

Screen? ☒ **Type** brass **Make**
Diameter Slot/Gauze Length Set
6 in. 20 ft. 185 ft. 205 ft.

Static Water Level
145 ft. Land surface Measure 06/21/1961

Pumping Level (below land surface)
ft. hrs. Pumping at 350 g.p.m.

Wellhead Completion
Pitless adapter manufacturer Model
☐ Casing Protection ☒ 12 in. above grade
☐ At-grade (Environmental Wells and Borings ONLY)

Grouting Information Well Grouted? ☐ Yes ☐ No ☐ Not Specified

Nearest Known Source of Contamination
feet Direction Type
Well disinfected upon completion? ☐ Yes ☐ No

Pump ☐ Not Installed Date Installed
Manufacturer's name
Model Number HP Volt
Length of drop pipe ft Capacity g.p. Typ

Abandoned
Does property have any not in use and not sealed well(s)? ☐ Yes ☐ No

Variance
Was a variance granted from the MDH for this well? ☐ Yes ☐ No

Miscellaneous
First Bedrock Aquifer Quat. Buried
Last Strat clay Depth to Bedrock ft
Located by Minnesota Department of Health
Locate Method GPS SA On (averaged)
System UTM - Mad83, Zone 15, Meters X 453581 Y 4983518
Unique Number Verification Information from Inpute Date 06/16/1999

Angled Drill Hole

Well Contractor
Minnesota Department of MDH
Licensee Business Lic. or Reg. No. Name of Driller

Minnesota Unique Well Number

223378

County Hennepin
Quad Hamel
Quad ID 121D

MINNESOTA DEPARTMENT OF HEALTH

WELL AND BORING REPORT

Minnesota Statutes Chapter 1031

Entry Date 08/24/1991
Update Date
Received Date 02/10/2016

Well Name	Township	Range	Dir	Section	Subsection
MEDINA	118	23	W	28	ACAAAA

Elevation 1053 **Elev. Method** 7.5 minute topographic map (+/- 5 feet)

Address

Contact 2052 24 CR MEDINA MN 55340
Well MEDINA MN 55340

Stratigraphy Information

Geological Material	From	To (ft.)	Color	Hardness
CLAY & GRAVEL	0	153	GRAY	
MUDDY SAND &	153	183		
WATER SAND &	183	203		
CLAY	203	204		

Remarks

Well Depth 204 ft. **Depth Completed** 203 ft. **Date Well Completed** 09/12/1960

Drill Method Cable Tool **Drill Fluid**

Use community supply(municipal) **Status** Active

Well Hydrofractured? **Yes** ☐ **No** ☐ **From** **To**

Casing Type Single casing **Joint**
Drive Shoe? **Yes** ☐ **No** ☐ **Above/Below** 2 ft.

Casing Diameter **Weight**
12 in. To 185 ft. lbs./ft.

Open Hole From ft. To ft.

Screen? ☒ **Type** brass **Make** JOHNSON

Diameter	Slot/Gauze	Length	Set	
11. in.	25	10 ft.	183 ft.	193 ft.
11. in.	20	6 ft.	193 ft.	199 ft.
11. in.	25	4 ft.	199 ft.	203 ft.

Static Water Level
135 ft. Land surface Measure 09/09/1960

Pumping Level (below land surface)
151 ft. hrs. Pumping at 415 g.p.m.

Wellhead Completion
Pitless adapter manufacturer Model
☐ Casing Protection ☒ 12 in. above grade
☐ At-grade (Environmental Wells and Borings ONLY)

Grouting Information Well Grouted? ☐ Yes ☐ No ☐ Not Specified

Nearest Known Source of Contamination
feet Direction Type
Well disinfected upon completion? ☐ Yes ☐ No

Pump ☒ Not Installed Date Installed
Manufacturer's name
Model Number HP Volt
Length of drop pipe ft Capacity g.p. Typ

Abandoned
Does property have any not in use and not sealed well(s)? ☐ Yes ☐ No

Variance
Was a variance granted from the MDH for this well? ☐ Yes ☐ No

Miscellaneous
First Bedrock Aquifer Quat. Buried
Last Strat clay Depth to Bedrock ft
Located by Minnesota Department of Health
Locate Method GPS SA On (averaged)
System UTM - Mad83, Zone 15, Meters X 453582 Y 4983525
Unique Number Verification Information from Inpute Date 06/16/1999

Angled Drill Hole

Well Contractor
Bergerson-Caswell 27058
Licensee Business Lic. or Reg. No. Name of Driller

Page 1

BERGERSON - CASWELL INC.

Commercial • Municipal • Residential
Geothermal • Irrigation
Submersible & Turbine Pumps
Environmental Drillers

Well Drilling, Abandonment & Repair Since 1948

Certified Well Drillers
Certified Pump Installers

January 19, 2007

CITY OF MEDINA
Attn: Mr. Steve Scherer
2052 County Road 24
Medina, MN 55340-9790

(763) 473-4643
(763) 473-9359

RE: WELL PUMP #3 FAILURE QUOTE; REMOVE, INSPECT, & REPLAIR/ REPLACE

Dear Mr.Scherer :

Bergerson-Caswell, Inc. appreciates the opportunity to assist you with your well pump needs. As per your request we are offering a maintenance quotation for the immediate removal and inspection to well pump #3 at Hamel water system. We recently upgraded well pump #4, and are familiar with the site, but not this well. From the information you provided I have estimated the materials and quantities required to complete this project. Below is an estimated ~~d~~ project cost based on replacing the stated materials in the well, but as always the final project cost will be based on the actual components replaced.

PROJECT COST Labor to remove well pump #3 and inspect it for evaluation:

1) Labor and equipment to mobilize, remove pump, & check current well variables.	$ 1,150.00
2) Inspect all pumping equipment removed from well, recommend options/ actual costs for repair, and replacement. Furnish owner with report.	$ 200.00
3)Materials needed to recondition WELL PUMP #3	
4"x 20' Certa Lock PVC submersible drop pipe @ $ 240.00/each, (13 total)	
4" Certa Lock PVC coupling, @ $44.00/each, (14 total)	
4" Certa Lock coupling splines @ $2.75/each, (28 total)	
4" Certa Lock coupling SS set screws @ $5.00/100 ct bag, (total 84)	
4" Certa Lock x MPT adapter Nipple @ $86.50/each	
Grundfos 150S200- 11-stage pump (150 gpm @ 420'TDH)	2,475.00
20 Hp, 480 volt, 3-phase, 3450 rpm, 6" submersible motor	1,850.00
275' of AWG #4-4/3 conductor with ground flat submersible wire at $4.50/ft.	1,237.50
Misc. SS banding, water level monitoring tubing, submersible splice kit, gaskets, bolting, pipe wrap, etc…	475.00
4) Labor to reinstall pump unit and test into the system	1,350.00

TOTAL PROJECT COST ESTIMATE WITH MATERIALS $ 8,737.50
****Note** This total is for the outlined items. If more or less materials are needed this total will be adjusted**

Additional Services and materials:

Video Investigate well, & furnish owner with copy of video(DVD or VHS)	$ 850.00
Brush well casing and bail scale from the bottom(pre-Video)	$1,875.00

If you have any questions on this proposal, or would like to discuss the information enclosed, please do not hesitate to contact us at (763) 479-3121 or cell (612) 369-3652.

Sincerely,
BERGERSON=CASWELL

Tim D. Bergman Project Manager

5115 Industrial St., Maple Plain, MN 55359 (763) 479-3121 Fax (763) 479-2183

BERGERSON - CASWELL INC.

Commercial • Municipal • Residential
Geothermal • Irrigation
Submersible & Turbine Pumps
Environmental Drillers

Well Drilling, Abandonment & Repair Since 1948

Certified Well Drillers
Certified Pump Installers

Page 1

January 25 2007

CITY OF MEDINA
Attn: Mr. Steve Scherer
2052 County Road 24
Medina, MN 55340-9790

(763) 473-4643
(763) 473-9359

RE: WELL PUMP #3 INSPECTION REPORT & RECOMMENDATIONS

Dear Mr.Scherer :

Bergerson-Caswell, Inc. appreciates the opportunity to assist you with your well pump needs. We have removed and inspected the equipment at well #3 in the Hamel water system. I believe the pump failed due to a cut in the wire insulation, causing a direct short. The well pump shows signs of wear and mineral build up within the housings and the motor thrust bearing as well as the winding insulation is weak and should be replaced. The remaining pump components require some attention(repair) and a few Certa lok replacement parts. Included in the following recommendations are the additional services you have mentioned to install the tubing for water level monitoring, installing a safety cable, modifying the pitless unit, as well as reconditioning other components.

PROJECT COST Labor to remove well pump #3 and inspect it for evaluation:

1) Labor and equipment to mobilize, remove pump, & check current well variables.	$ 1,150.00
2) Inspect all pumping equipment removed from well, recommend options/ actual costs for repair, and replacement. Furnish owner with report.	$ 200.00
3)Materials needed to recondition WELL PUMP #3	
4" Certa Lock PVC coupling, @ $44.00/each, (4 total)	176.00
4" Certa Lock coupling splines @ $2.75/each, (20 total)	55.00
4" Certa Lock coupling SS set screws @ $5.00	5.00
Grundfos 150S150- 8-stage pump (150 gpm @ 300'TDH)	2,150.00
15 Hp, 480 volt, 3-phase, 3450 rpm, 6" submersible motor	1,560.00
285' of AWG #8-4/3 conductor with ground flat submersible wire at $3.50/ft.	997.50
Misc. SS banding, water level monitoring tubing, submersible splice kit, gaskets, bolting, Pitless o-rings, & pipe wrap, etc...	550.00
300' x ¼" SS cable with ¼" SS cable clamps	390.00
Install Threaded ½ coupling on side of pitless for Conduit(level sensor)	150.00
Shop labor to clean up spool, Sand blast, paint, & modify pull pipe to hold safety cables, & water level monitor, Clean and paint (1) 4"x 21'steel pipe; 13 hrs @ $65.00/hr	845.00
4) Labor to reinstall pump unit and test into the system	1,350.00

TOTAL PROJECT COST WITH COMPLETE MATERIALS $ 9,578.50

-ABB 20 Hp 480ACH550-UH-031A-4, Standard drive in NEMA 1 UL type 1 enclosure; EMI/RFI filter; fault log OV/UV protection, 31 amp, R3 frame. 23 x 8 x 9.1, wt 35 lbs	2,150.00
Factory representative certified startup assistance includes 2 years parts & labor warranty	320.00
-ABB 15 Hp 480ACH550-UH-031A-4, Standard drive in NEMA 1 UL type 1 enclosure; EMI/RFI filter; fault log OV/UV protection, 31 amp, R3 frame, 23 x 8 x 9.1, wt 35 lbs	1,670.00
Factory representative certified startup assistance includes 2 years parts & labor warranty	320.00

NOT INSTALLED NEED ELECTRICIAN

If you have any questions on this proposal, or would like to discuss the information enclosed, please do not hesitate to contact us at (763) 479-3121 or cell (612) 369-3652.

Sincerely,

5115 Industrial St. Maple Plain, MN 55359 (763) 479-3121 Fax (763) 479-2183
BERGERSON-CASWELL Tim D. Bergquam Project Manager

Page 1

BERGERSON - CASWELL INC.

Commercial • Municipal • Residential
Geothermal • Irrigation
Submersible & Turbine Pumps
Environmental Drillers

Well Drilling, Abandonment & Repair Since 1948

Certified Well Drillers
Certified Pump Installers

January 19, 2007

CITY OF MEDINA
Attn: Mr. Steve Scherer
2052 County Road 24
Medina, MN 55340-9790

(763) 473-4643
(763) 473-9359

RE: WELL PUMP #3 FAILURE QUOTE; REMOVE, INSPECT, & REPLAIR/ REPLACE

Dear Mr.Scherer :

Bergerson-Caswell, Inc. appreciates the opportunity to assist you with your well pump needs. As per your request we are offering a maintenance quotation for the immediate removal and inspection to well pump #3 at Hamel water system. We recently upgraded well pump #4, and are familiar with the site, but not this well. From the information you provided I have estimated the materials and quantities required to complete this project. Below is an estimated ~~d~~ project cost based on replacing the stated materials in the well, but as always the final project cost will be based on the actual components replaced.

PROJECT COST Labor to remove well pump #3 and inspect it for evaluation:

1) Labor and equipment to mobilize, remove pump, & check current well variables.	$ 1,150.00
2) Inspect all pumping equipment removed from well, recommend options/ actual costs for repair, and replacement. Furnish owner with report.	$ 200.00
3)Materials needed to recondition WELL PUMP #3	
4"x 20' Certa Lock PVC submersible drop pipe @ $ 240.00/each, (13 total)	
4" Certa Lock PVC coupling, @ $44.00/each, (14 total)	
4" Certa Lock coupling splines @ $2.75/each, (28 total)	
4" Certa Lock coupling SS set screws @ $5.00/100 ct bag, (total 84)	
4" Certa Lock x MPT adapter Nipple @ $86.50/each	
Grundfos 150S200- 11-stage pump (150 gpm @ 420'TDH)	2,475.00
20 Hp, 480 volt, 3-phase, 3450 rpm, 6" submersible motor	1,850.00
275' of AWG #4-4/3 conductor with ground flat submersible wire at $4.50/ft.	1,237.50
Misc. SS banding, water level monitoring tubing, submersible splice kit, gaskets, bolting, pipe wrap, etc…	475.00
4) Labor to reinstall pump unit and test into the system	1,350.00

TOTAL PROJECT COST ESTIMATE WITH MATERIALS $ 8,737.50
****Note** This total is for the outlined items. If more or less materials are needed this total will be adjusted**

Additional Services and materials:

Video Investigate well, & furnish owner with copy of video(DVD or VHS)	$ 850.00
Brush well casing and bail scale from the bottom(pre-Video)	$1,875.00

If you have any questions on this proposal, or would like to discuss the information enclosed, please do not hesitate to contact us at (763) 479-3121 or cell (612) 369-3652.

Sincerely,
BERGERSON=CASWELL

Tim D. Bergman Project Manager

5115 Industrial St., Maple Plain, MN 55359 (763) 479-3121 Fax (763) 479-2183

BERGERSON - CASWELL INC.

Commercial • Municipal • Residential
Geothermal • Irrigation
Submersible & Turbine Pumps
Environmental Drillers

Well Drilling, Abandonment & Repair Since 1948

Certified Well Drillers
Certified Pump Installers

Page 1

January 25 2007

CITY OF MEDINA
Attn: Mr. Steve Scherer
2052 County Road 24
Medina, MN 55340-9790

(763) 473-4643
(763) 473-9359

RE: WELL PUMP #3 INSPECTION REPORT & RECOMMENDATIONS

Dear Mr.Scherer :

Bergerson-Caswell, Inc. appreciates the opportunity to assist you with your well pump needs. We have removed and inspected the equipment at well #3 in the Hamel water system. I believe the pump failed due to a cut in the wire insulation, causing a direct short. The well pump shows signs of wear and mineral build up within the housings and the motor thrust bearing as well as the winding insulation is weak and should be replaced. The remaining pump components require some attention(repair) and a few Certa lok replacement parts. Included in the following recommendations are the additional services you have mentioned to install the tubing for water level monitoring, installing a safety cable, modifying the pitless unit, as well as reconditioning other components.

PROJECT COST Labor to remove well pump #3 and inspect it for evaluation:

1) Labor and equipment to mobilize, remove pump, & check current well variables.	$ 1,150.00
2) Inspect all pumping equipment removed from well, recommend options/ actual costs for repair, and replacement. Furnish owner with report.	$ 200.00
3)Materials needed to recondition WELL PUMP #3	
4" Certa Lock PVC coupling, @ $44.00/each, (4 total)	176.00
4" Certa Lock coupling splines @ $2.75/each, (20 total)	55.00
4" Certa Lock coupling SS set screws @ $5.00	5.00
Grundfos 150S150- 8-stage pump (150 gpm @ 300'TDH)	2,150.00
15 Hp, 480 volt, 3-phase, 3450 rpm, 6" submersible motor	1,560.00
285' of AWG #8-4/3 conductor with ground flat submersible wire at $3.50/ft.	997.50
Misc. SS banding, water level monitoring tubing, submersible splice kit, gaskets, bolting, Pitless o-rings, & pipe wrap, etc...	550.00
300' x ¼" SS cable with ¼" SS cable clamps	390.00
Install Threaded ½ coupling on side of pitless for Conduit(level sensor)	150.00
Shop labor to clean up spool, Sand blast, paint, & modify pull pipe to hold safety cables, & water level monitor, Clean and paint (1) 4"x 21'steel pipe; 13 hrs @ $65.00/hr	845.00
4) Labor to reinstall pump unit and test into the system	1,350.00

TOTAL PROJECT COST WITH COMPLETE MATERIALS $ 9,578.50

-ABB 20 Hp 480ACH550-UH-031A-4, Standard drive in NEMA 1 UL type 1 enclosure; EMI/RFI filter; fault log OV/UV protection, 31 amp, R3 frame. 23 x 8 x 9.1, wt 35 lbs	2,150.00
Factory representative certified startup assistance includes 2 years parts & labor warranty	320.00
-ABB 15 Hp 480ACH550-UH-031A-4, Standard drive in NEMA 1 UL type 1 enclosure; EMI/RFI filter; fault log OV/UV protection, 31 amp, R3 frame, 23 x 8 x 9.1, wt 35 lbs	1,670.00
Factory representative certified startup assistance includes 2 years parts & labor warranty	320.00

NOT INSTALLED NEED ELECTRICIAN

If you have any questions on this proposal, or would like to discuss the information enclosed, please do not hesitate to contact us at (763) 479-3121 or cell (612) 369-3652.

Sincerely,

5115 Industrial St. Maple Plain, MN 55359 (763) 479-3121 Fax (763) 479-2183
BERGERSON-CASWELL Tim D. Bergquam Project Manager

BERGERSON - CASWELL INC.

Commercial • Municipal • Residential
Geothermal • Irrigation
Submersible & Turbine Pumps
Environmental Drillers

Well Drilling, Abandonment & Repair Since 1948

Certified Well Drillers
Certified Pump Installers

November 20, 2006

CITY OF MEDINA
Attn: Mr. Steve Scherer
2052 County Road 24
Medina, MN 55340-9790

(763) 473-4643
(763) 473-9359

RE: INVOICE FOR WELL & PUMP #1 INSPECTION @ INDEPENDENCE BEACH

Dear Mr.Scherer :
Bergerson-Caswell, Inc. appreciates the opportunity to assist you with your well pump needs. We have completed the preventive maintenance project at well #1 (turbine pump assembly). This installation was balanced and tested while pumping to waste. The Minnesota Department of Health requires sealing the well head with an approved seal, and with your installation we have to grout (cement) the base into place. This has a set time of 24 hours, and hopefully this pump will not be called for during this period, but if the pump does have to run, we may have to reseal the grout around the well head. Please keep an eye on this within the next few days. Below is a breakdown of the repairs and materials that were replaced during this project along with the corresponding costs for each which is the same amount we offered right after the pump was removed and inspected.

PROJECT COST Labor to remove well pump #1 and inspect it for evaluation:

1) Labor and equipment to mobilize, remove pump, & check current well variables.	$ 1,250.00
2) Inspect all pumping equipment removed from well, recommend options/ actual costs for repair, and replacement. Furnish owner with report.	$ 200.00
3)Materials needed to recondition WELL PUMP #1	
12 each 6"x 119.25" T&C column pipe @ $245.00/each	2,940.00
1 each 6"x 59.25" T & C column pipe @ $195.00/each	195.00
6"x 10' suction pipe @ $225.00	225.00
Recondition Discharge head (sandblast, paint, replace stuffing box bearing)	350.00
Replace 12 each spider bearing inserts @ $25.00/ea	300.00
Replace 8 each Spider assemblies @ $45.00/ea	360.00
Pump assembly (10" Tait, 6 stage Bowl Designed: 550 gpm @ 252'TDH)	
F & I complete set of pump bearings	275.00
Machine impeller and install wear ring 6 each @ $ 175.00	1,050.00
Sand Blast, reassemble, and Paint Pump, SS cap screws	650.00
Reconditioned VHS Motor (GE, 40 Hp, 480v/ 79 fla)	1,200.00
Misc shop labor not included in items above 15 hrs @ $65.00/hr	975.00
Clean & straighten line-shafting, & couplings,	
4) Labor to reinstall pump unit and test into the system	1,450.00
5) Video Investigate well casing and screen, & furnish owner with copy of video (VHS)	350.00

TOTAL PROJECT COST without additional services $ 11,770.00

I have enclosed the project information and installation paperwork to update your records. If you have any questions on this project, or would like to discuss the information enclosed, please do not hesitate to contact us at (763) 479-3121 or cell (612) 369-3652.
Sincerely,

BERGERSON-CASWELL

Tim D. Berquam Project Manager

5115 Industrial St., Maple Plain, MN 55359 (763) 479-3121 Fax (763) 479-2183

DATE: 11/16/06 WELL #: 1 SIZE: 12" STATIC: 74'

NAME: City of Medina, MN

PICTURE QUALITY _____ WELL CASING DEPTH: 198'

WELL DEPTH: 238' AMOUNT OF WATER: _____

DEPTH IN FEET	LOG
5'	Lens from top of well - heavier scale
20'	Joint
41'	Joint
46'	Draw down cable stuck on side of well and pipe coupling against well.
56'	Pipe coupling against well
72'	End of draw down gauge cable
74'	Static water level
74' - 96'	Cloudy water
96'	Coupling against side wall
97'	Casing joint
138'	Joint
192'	Top of leader pipe
198'	Top of screen (very clean)
218'	Joint in screen
238'	Bottom of well (bottom 4' of screen starting to plug)

DEEP WELL TURBINE PUMP
ELECTRIC MOTOR DRIVEN
WATER OR OIL LUBRICATED

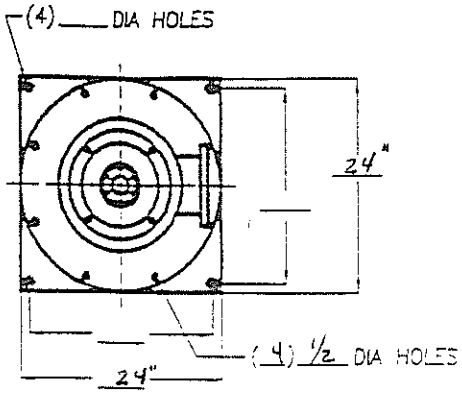

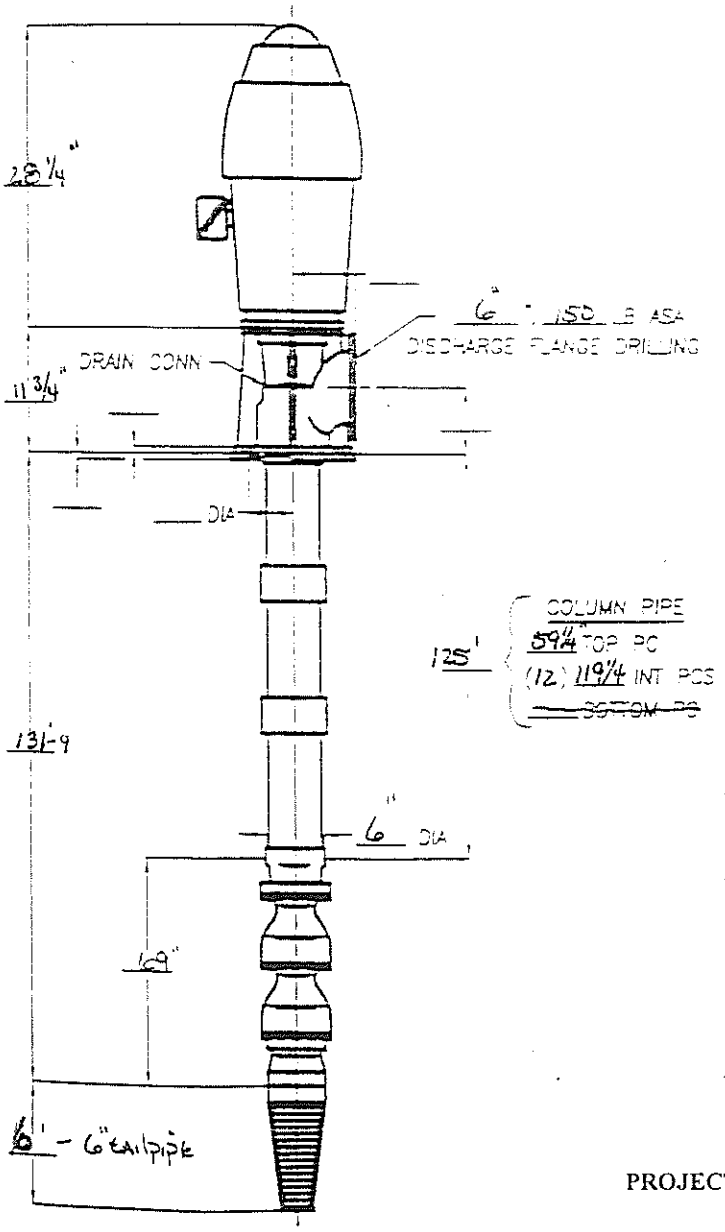

BERGERSON CASWELL INC.

5115 Industrial Street. Maple Plain, MN 55359

Phone (763) 479-3121 Fax (763) 479-2183 (800) 328-6188

PUMP INSTALLATION

PROJECT Well #1 Inspection 2006
OWNER City of Medina
LOCATION Independence Beach
DATE 11-20-06

WELL INFORMATION UNIQUE # 100219
Casing Size 12" End of casing 200' *6 1/2 cu yd Grout.
~~Open Hole~~/ Screened 200 - 240' (5'x10" x 12" pipe with lead packer)
Bottom Of Well (Depth) 240'
SWL 74' . & PWL 76' @ 625 GPM. 60 Hz
SWL ___ . & PWL ___ @ ___ GPM. ___ Hz

WATER SYSTEM CONTROL & STORAGE
Pressure in Hydronumatic tank

MOTOR STARTER / ~~VARIABLE SPEED~~
Size ___ Coil Voltage ___
Brand Magnetic Starter w/
Press. Setting System MCC Control
Start / Stop Pressures 57 psi - 67 psi
Minimum Frequency 60 Hz

WELL HEAD COMPLETION
Discharge Head Size
Manufacturer & Model Tait 16"x6"x6"
Well Vent & Size Yes 2"
Electrical Conduit Size 1 1/4"
Packing & Bearing sizes .500 1 1/4 x 1 3/4 x 4"
OTHER No Available Room for Poly.
Base Grouted into Place

COLUMN ASSEMBLY
Size 6" Length (total) 125'
Length's (12) EA 9'-11 1/4" (1) EA 4'-11 1/4"
Material Special ASTM A53 Grade B Sch 40
Shaft Size 1-3/16 Length ___ Carbon / SS / Third 2 jumps
Sleeve size 1-3/16 Spider Bearing insert size 1 3/16 x 2" & 1 3/8 x 2"
Head Shaft 90" x 1 1/4 Base shaft ___ one piece

POWER CABLE & CONNECTION
Size AWG# ___ Length ___

PUMP BOWL ASSEMBLY
Manufacturer Tait AC
Model 10 EGL - 6 Stages
Design 500 GPM @ 252 TDH
___ GPM @ ___ TDH
Intake 6" tailpipe (6')

MOTOR INFORMATION
Manufacturer General Electric
Hp 40 / Phase 3 / Voltage 460 FLA 50
RPM 1760 / Frequency 60 Hz

VIBRATIONS	
2.6	1.8
1.6	1.8

PROJECT SPECIAL ITEMS Motor reconditioned, replaced all pipe, 7 spider assemb. reconditioned pump (bearings & rings) & discharge head. Cleaned & sprayed all shafting. We video logged well. (It was very clean)

* Note this well is crooked. Pipe is lying against casing. Draw down gauge get stuck real easy.

BERGERSON - CASWELL INC.

Commercial • Municipal • Residential
Geothermal • Irrigation
Submersible & Turbine Pumps
Environmental Drillers

Well Drilling, Abandonment & Repair Since 1948

Certified Well Drillers
Certified Pump Installers

November 20, 2006

CITY OF MEDINA
Attn: Mr. Steve Scherer
2052 County Road 24
Medina, MN 55340-9790

(763) 473-4643
(763) 473-9359

RE: INVOICE FOR WELL & PUMP #1 INSPECTION @ INDEPENDENCE BEACH

Dear Mr.Scherer :

Bergerson-Caswell, Inc. appreciates the opportunity to assist you with your well pump needs. We have completed the preventive maintenance project at well #1 (turbine pump assembly). This installation was balanced and tested while pumping to waste. The Minnesota Department of Health requires sealing the well head with an approved seal, and with your installation we have to grout (cement) the base into place. This has a set time of 24 hours, and hopefully this pump will not be called for during this period, but if the pump does have to run, we may have to reseal the grout around the well head. Please keep an eye on this within the next few days. Below is a breakdown of the repairs and materials that were replaced during this project along with the corresponding costs for each which is the same amount we offered right after the pump was removed and inspected.

PROJECT COST Labor to remove well pump #1 and inspect it for evaluation:

1) Labor and equipment to mobilize, remove pump, & check current well variables.	$ 1,250.00
2) Inspect all pumping equipment removed from well, recommend options/ actual costs for repair, and replacement. Furnish owner with report.	$ 200.00
3)Materials needed to recondition WELL PUMP #1	
12 each 6"x 119.25" T&C column pipe @ $245.00/each	2,940.00
1 each 6"x 59.25" T & C column pipe @ $195.00/each	195.00
6"x 10' suction pipe @ $225.00	225.00
Recondition Discharge head (sandblast, paint, replace stuffing box bearing)	350.00
Replace 12 each spider bearing inserts @ $25.00/ea	300.00
Replace 8 each Spider assemblies @ $45.00/ea	360.00
Pump assembly (10" Tait, 6 stage Bowl Designed: 550 gpm @ 252'TDH)	
F & I complete set of pump bearings	275.00
Machine impeller and install wear ring 6 each @ $ 175.00	1,050.00
Sand Blast, reassemble, and Paint Pump, SS cap screws	650.00
Reconditioned VHS Motor (GE, 40 Hp, 480v/ 79 fla)	1,200.00
Misc shop labor not included in items above 15 hrs @ $65.00/hr	975.00
Clean & straighten line-shafting, & couplings,	
4) Labor to reinstall pump unit and test into the system	1,450.00
5) Video Investigate well casing and screen, & furnish owner with copy of video (VHS)	350.00

TOTAL PROJECT COST without additional services $ 11,770.00

I have enclosed the project information and installation paperwork to update your records. If you have any questions on this project, or would like to discuss the information enclosed, please do not hesitate to contact us at (763) 479-3121 or cell (612) 369-3652.

Sincerely,

BERGERSON-CASWELL

Tim D. Berquam Project Manager

5115 Industrial St., Maple Plain, MN 55359 (763) 479-3121 Fax (763) 479-2183

DATE: 11/16/06 WELL #: 1 SIZE: 12" STATIC: 74'

NAME: City of Medina, MN

PICTURE QUALITY _____ WELL CASING DEPTH: 198'

WELL DEPTH: 238' AMOUNT OF WATER: _____

DEPTH IN FEET	LOG
5'	Lens from top of well - heavier scale
20'	Joint
41'	Joint
46'	Draw down cable stuck on side of well and pipe coupling against well.
56'	Pipe coupling against well
72'	End of draw down gauge cable
74'	Static water level
74' - 96'	Cloudy water
96'	Coupling against side wall
97'	Casing joint
138'	Joint
192'	Top of leader pipe
198'	Top of screen (very clean)
218'	Joint in screen
238'	Bottom of well (bottom 4' of screen starting to plug)

DEEP WELL TURBINE PUMP
ELECTRIC MOTOR DRIVEN
WATER OR OIL LUBRICATED

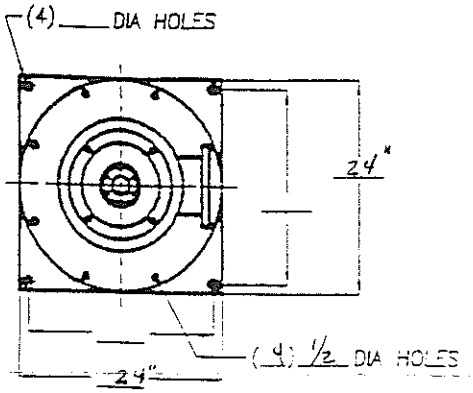

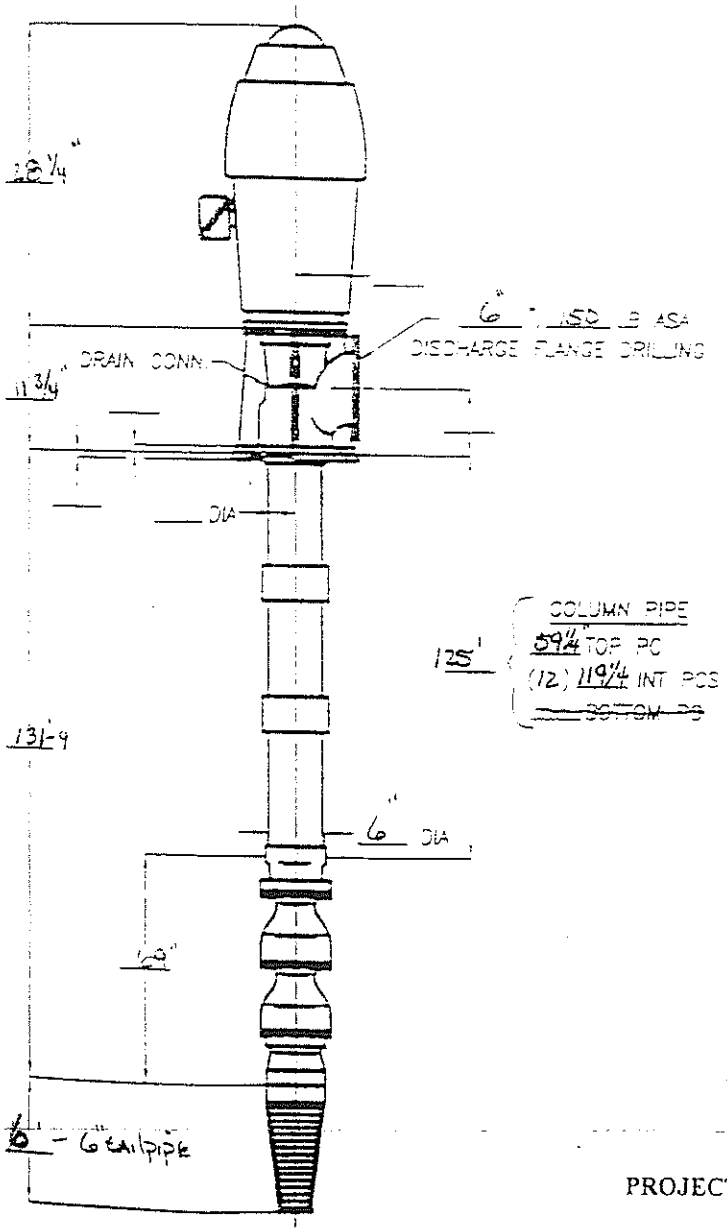

BERGERSON CASWELL INC.

5115 Industrial Street. Maple Plain, MN 55359

Phone (763) 479-3121 Fax (763) 479-2183 (800) 328-6188

PUMP INSTALLATION

PROJECT WELL #1 INSPECTION 2006
OWNER CITY OF MEDINA
LOCATION INDEPENDENCE BEACH
DATE 11-20-06

WELL INFORMATION UNIQUE # 100219
Casing Size 12" End of casing 200' *6½ lb/gal GROUT.
~~Open Hole~~/ Screened 200 - 240' (5"x10" x 12" PIPE WITH LEAD FAILER)
Bottom Of Well (Depth) 240'
SWL 74' & PWL 76' @ 625 GPM. 60 Hz
SWL ___ & PWL ___ @ ___ GPM. ___ Hz

WATER SYSTEM CONTROL & STORAGE
PRESSURE IN HYDROPNEMATIC TANK

MOTOR STARTER ~~VARIABLE SPEED~~
Size ___ Coil Voltage ___
Brand MAGNETIC STARTER w/
Press. Setting SYSTEM MCC CONTROL
Start Stop Pressures 57 PSI - 67 PSI
Minimum Frequency 60 Hz

WELL HEAD COMPLETION
Discharge Head Size
Manufacturer & Model TAIT 16"x6"x6"
Well Vent & Size YES 2"
Electrical Conduit Size 1¼"
Packing & Bearing sizes .500 1¼ x 1¾ x 4"
OTHER NO AVAILABLE ROOM FOR POWER
BASE GROUTED INTO PLACE

COLUMN ASSEMBLY
Size 6" Length (total) 125'
Length's (12) EA 9'-11¼" (1) EA. 4'-11¼"
Material Special ASTM A53 GRADE B SCH 40
Shaft Size 1-3/16" Length ___ Carbon (SS) Thrd 2 Jumps
Sleeve size 1-3/16 Spider Bearing insert size 1 3/16 x 2" & 1 3/8 x 2"
Head Shaft 1" x 1¼ Base shaft ___ ONE PIECE

POWER CABLE & CONNECTION
Size AWG= ___ Length ___

PUMP BOWL ASSEMBLY
Manufacturer TAIT AC
Model 10 EGL - 6 Stages
Design 500 GPM @ 252 TDH
___ GPM @ ___ TDH
Intake 6" TAILPIPE (6')

MOTOR INFORMATION
Manufacturer GENERAL ELECTRIC
Hp 40 / Phase 3 / Voltage 460 FLA 50
RPM 1760 / Frequency 60 Hz

VIBRATIONS	
2.6	1.8
1.6	1.3

PROJECT SPECIAL ITEMS MOTOR RECONDITION, REPLACED All pipe, 7 SPIDER ASSEMB
RECONDITIONED Pump (BEARINGS & RINGS) & DISCHARGE HEAD. CLEANED & STR
All SHAFTING. WE Video LOGGED WELL (IT WAS VERY CLEAN)

* NOTE THIS WELL is CROOKED. PIPE is lying AGAINST CASING.
DRAW DOWN GAUGE GET ~~STUCK~~ REAL EASY.

WELL DATA:

DRILLER:	STEVENS WELL DRILLING CO.
DRILLING DATE:	AUGUST 1975
STATIC WATER LEVEL:	73'-1"
PUMPING LEVEL:	73'-3" @ 650GPM
ORIGINAL CASING EL.:	ASSUMED 997.9

PUMP DATA

INSTALLER:	BERGERSON-CASWELL
INSTALLATION DATE:	MAY 1984
CAPACITY:	500 GPM, 252 FT, 1760 RPM
DESIGN PUMPING LEVEL	73 FT
POWER:	460 VOLTS 3 PHASE
1984 PUMPING WATER LEVEL	75 FT

WELL LOG:

DEPTH IN FEET

0 — CASING EL 997.9

CLAY-SAND, YELLOW

14

CLAY-SAND, BLUE

58

SAND, LITTLE CLAY

70

SAND-GRAVEL

95

CLAY-SANDY

110

SAND

130
133 — CLAY, VERY SANDY

SAND-FINE

155

COARSE SAND, GRAVEL

240

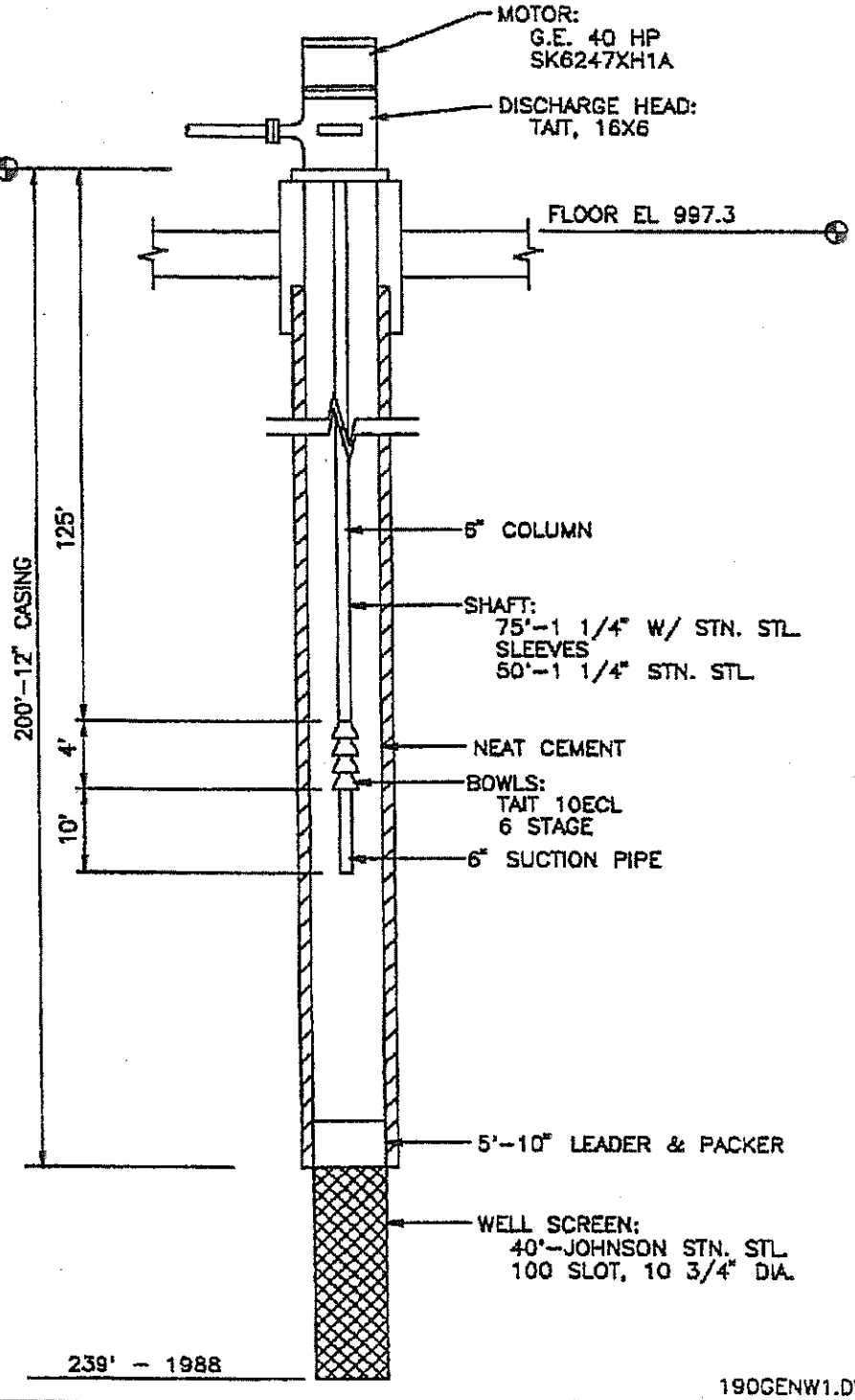

190GENW1.DWG

Bonestroo Rosene Anderlik & Associates

Engineers & Architects
St. Paul, Minnesota

UNIQUE WELL No.: 100219
INSTALLED: 1975
REPAIRED:
1984 - SOME COL. & SHAFT, MOTOR REPAIR

INDEPENDENCE BEACH WELL & PUMP NO. 1 MEDINA, MINNESOTA RECORD PLAN

NOV. 1991

FILE NO. 190WS

WELL DATA:

DRILLER:	STEVENS WELL DRILLING CO.
DRILLING DATE:	AUGUST 1975
STATIC WATER LEVEL:	73'-1"
PUMPING LEVEL:	73'-3" @ 650GPM
ORIGINAL CASING EL.:	ASSUMED 997.9

PUMP DATA

INSTALLER:	BERGERSON-CASWELL
INSTALLATION DATE:	MAY 1984
CAPACITY:	500 GPM, 252 FT, 1760 RPM
DESIGN PUMPING LEVEL	73 FT
POWER:	460 VOLTS 3 PHASE
1984 PUMPING WATER LEVEL	75 FT

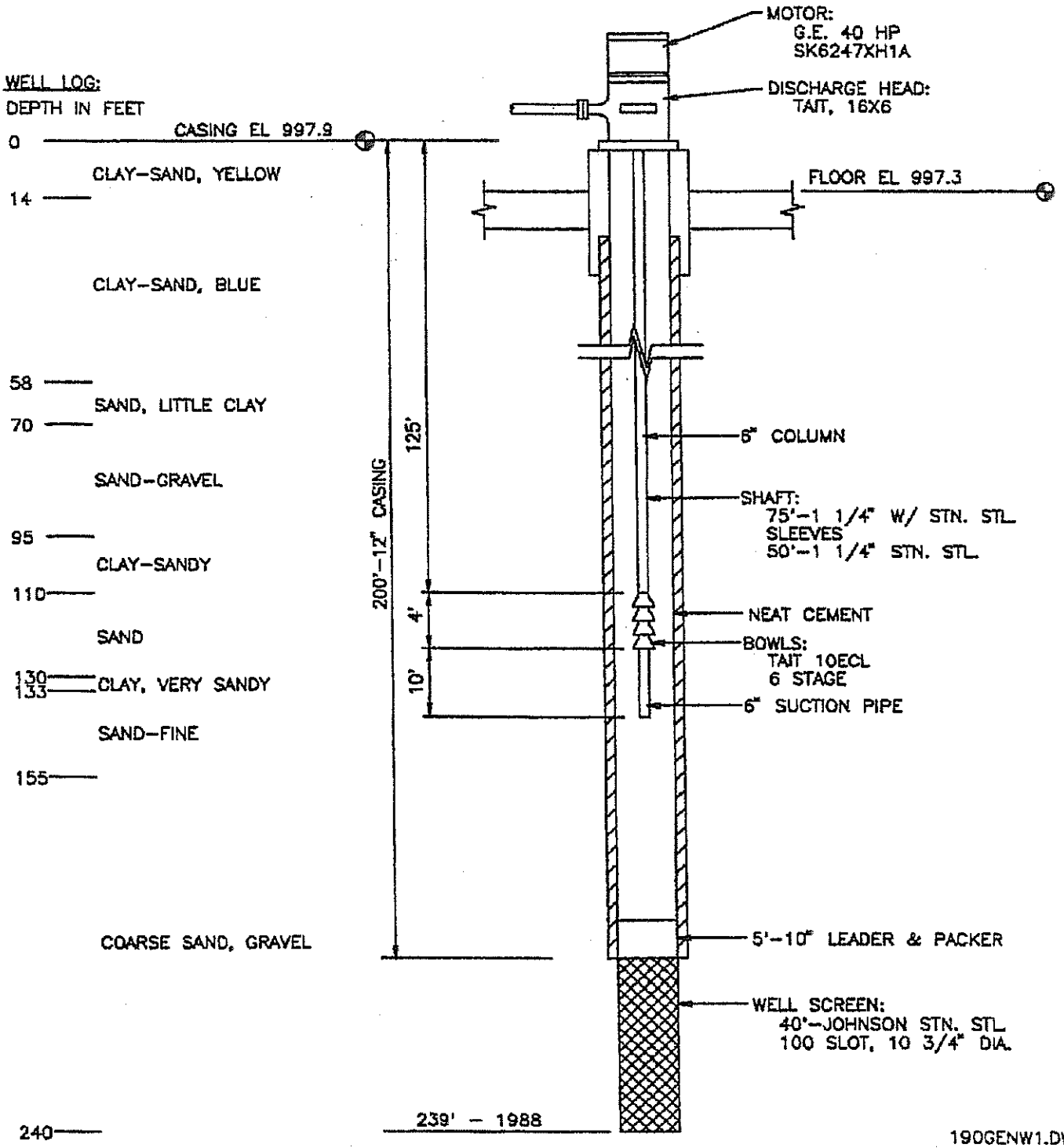

Bonestroo Rosene Anderlik & Associates

Engineers & Architects
St. Paul, Minnesota

UNIQUE WELL No.: 100219
INSTALLED: 1975
REPAIRED:
1984 - SOME COL. & SHAFT, MOTOR REPAIR

INDEPENDENCE BEACH WELL & PUMP NO. 1 MEDINA, MINNESOTA RECORD PLAN

NOV. 1991

FILE NO. 190WS

WELL DATA:

DRILLER:	STEVENS WELL DRILLING CO.
DRILLING DATE:	AUGUST 1975
STATIC WATER LEVEL:	73'-1"
PUMPING LEVEL:	73'-3" @ 650GPM
ORIGINAL CASING EL.:	ASSUMED 997.9

PUMP DATA

INSTALLER:	BERGERSON-CASWELL
INSTALLATION DATE:	MAY 1984
CAPACITY:	500 GPM, 252 FT, 1760 RPM
DESIGN PUMPING LEVEL	73 FT
POWER:	460 VOLTS 3 PHASE
1984 PUMPING WATER LEVEL	75 FT

WELL LOG:

DEPTH IN FEET

0 — CASING EL 997.9

CLAY-SAND, YELLOW

14

CLAY-SAND, BLUE

58

SAND, LITTLE CLAY

70

SAND-GRAVEL

95

CLAY-SANDY

110

SAND

130
133 — CLAY, VERY SANDY

SAND-FINE

155

COARSE SAND, GRAVEL

240

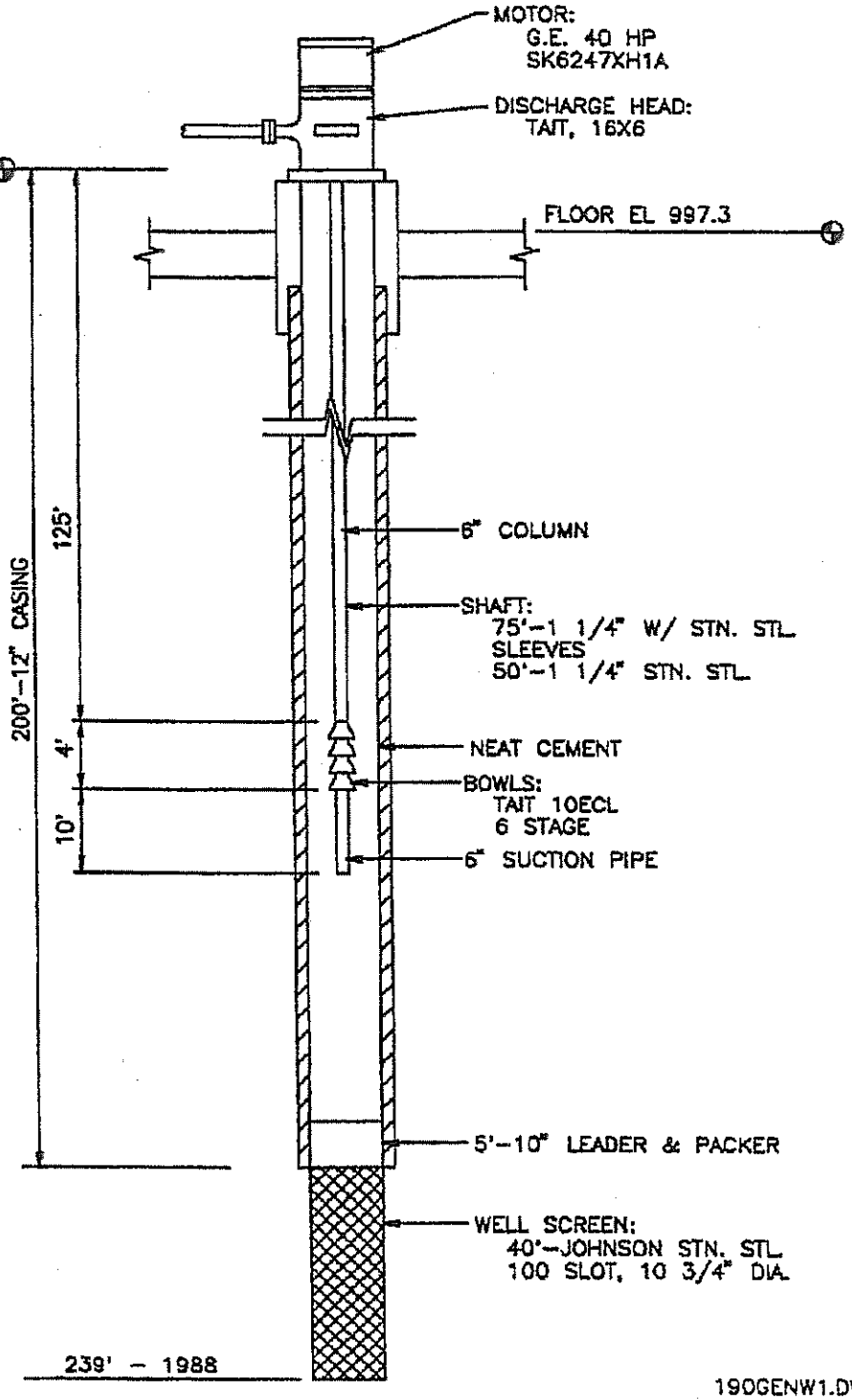

190GENW1.DWG

Bonestroo Rosene Anderlik & Associates

Engineers & Architects
St. Paul, Minnesota

UNIQUE WELL No.: 100219
INSTALLED: 1975
REPAIRED:
1984 - SOME COL. & SHAFT, MOTOR REPAIR

INDEPENDENCE BEACH WELL & PUMP NO. 1 MEDINA, MINNESOTA RECORD PLAN

NOV. 1991

FILE NO. 190WS

BERGERSON - CASWELL INC.

Commercial • Municipal • Residential
Geothermal • Irrigation
Submersible & Turbine Pumps
Environmental Drillers

Well Drilling, Abandonment & Repair Since 1948

Certified Well Drillers
Certified Pump Installers

March 3, 2008

CITY OF MEDINA
Attn: Mr. Steve Scherer
2052 County Road 24
Medina, MN 55340-9790

(763) 473-4643
(763) 473-9359

RE: INVOICE FOR MORNINGSIDE WELL PUMP #2 SERVICE INSPECTION

Dear Mr.Scherer :

Bergerson-Caswell, Inc. appreciates the opportunity to assist you with your well pump needs. As per our project bid and your approval we have completed the Mourning-side well #2 pumping equipment inspection project. Below is the project cost breakdown, and enclosed with this invoice are the project documents for the services performed, testing results and what we installed.

PROJECT INVOICE AMOUNT:

1) Labor and equipment to remove, reinstall, and test well pump.	$ 2,850.00
2) Shop labor to locate, prepare and load materials required for completing this project.	200.00
3) Grundfos 230S200- 6-stage pump (190 gpm @ 300'TDH)	2,090.00
4) 20 Hp, 230 volt 3-phase, 3450 rpm, 6" submersible motor	1,969.00
5) 170' of AWG #6-3 conductor with ground flat submersible wire at $3.40/ft.	578.00
6) 168'of 3" Drop pipe, Black sch 40 steel $12.75/ft.	2,142.00
7) Misc. Pipe wrap, submersible splice kit, gaskets, chlorine, 1" poly for water level monitoring	175.00
8) Re-Construct well-head, 3.5 hrs @ $65.00/hr	227.50
Materials :	250.00
9) Video Investigation of the well and casing	1,000.00
10) Wire brush well casing for removing scale & cleaning prior to video	1,200.00
TOTAL WELL PUMP REPLACEMENT PROJECT INVOICE AMOUNT	**$ 12,681.50**

If you have any questions on this proposal, or would like to discuss it, please do not hesitate to contact us at (763) 479-3121 or cell (612) 369-3652.

Sincerely,
BERGERSON-CASWELL

Tim D. Berquam Project Manager

5115 Industrial St., Maple Plain, MN 55359 (763) 479-3121 Fax (763) 479-2183

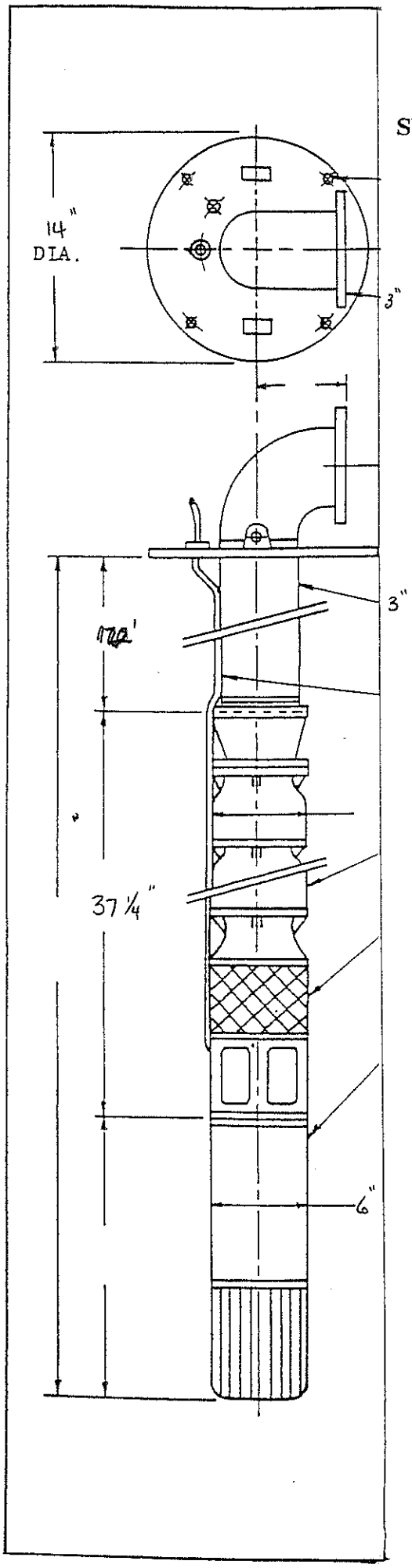

SUBMERSIBLE PUMP INSTALLATION

OWNER City of Medina
LOCATION Morningside #2
CONTRACTOR Bergerson Caswell
INSTALLER Eugene D.
DATE OF INSTALLATION 2-21-08

WELL INFORMATION
Casing Size 12" Depth 197'
~~Open Hole~~/ Screened 179'-197'
Bottom Of Well 197'
SWL 149 PWL ____

WATER SYSTEM CONTROL
Pressure Transducer.

WATER SYSTEM STORAGE
Hydropneumatic tank.

~~Motorstarter~~/ *VARIABLE SPEED*
Size ____ Coil Voltage ____
VFD Brand AB
Press. Setting ____
Start / Stop Pressures ____
Minimum Frequency ____

WELL HEAD COMPLETION
~~Pitless or~~ Fabricated Discharge
Manufacturer 3" Flange
Model 14" Plate with threaded tee
Pull Pipe & Size ____
Well Vent & Size yes.
Electrical Conduit Size ____
OTHER 1" poly (170')

COLUMN PIPE
Size 3" Length (total) 168
Length's 21' ERS 8(EA)
Material / Special ASTM A53 GRADB.
Check Valve(s) In Pump
Type/Where Discharge Case

SUBMERSIBLE CABLE
Flat/ ~~Twisted~~ Pump Cable
AWG# 6 Length 1

PUMP BOWL ASSEMBLY
Manufacturer Grundfos
Model 2305200 - 60 Stages
Design 225 GPM @ 260 'TDH
____ GPM @ ____ 'TDH
~~Intake Screen~~ 8" nipple & coupling

SUBMERSIBLE MOTOR
Manufacturer Franklin
Hp 20 / Phase 3 / Voltage 230
RPM 3450 / Frequency varied
Sleeve Size If Required N/A

TURBINE PUMP
(MOTOR, PUMP, PERFORMANCE RECORD)

(AS PULLED) **DATE:** February 7, 2008

GENERAL INFO: Customer/Owner: Medina Morningside Well/Pump #: 2
Address/Location: Bobolink Road
Persons on Job Site: Steve and Grey

MOTOR INFO: Horsepower 20 Stand Still Volts 248/250/248 Running Volts 245/246/246
Manufacturer Franklin R.P.M. 3450 Full Load Amps 61 S.F.Amps/__

BOWL DESIGN: G.P.M. 225 T.D.H. 250' Megger Reading 200

PERFORMANCE TEST: Static Water Level 149' Well Diameter 12" Well Depth 197'

Test #1: HZ 59 AMPS / / Gallons Per Minute 180 Water Level 146' P.S.I. 56 T.D.H. 275'
Test #2: HZ __ AMPS / / Gallons Per Minute ____ Water Level ____ P.S.I. ____ T.D.H. ____
Test #3: HZ ____ AMPS / / Gallons Per Minute ____ Water Level ____ P.S.I. ____ T.D.H. ____

T.D.H. = Pumping Water Level in Feet + (P.S.I. reading x 2.31) + Friction Loss In Column + Fittings
Example: Information Given: 1000 G.P.M., 150' Water Level, 50 P.S.I.,3.5' Friction Loss
Therefore: 150' + (50# x 2.31 or 115.5') + 3.5' = 269' T.G.H.
OR
The pump is producing 1000 G.P.M. at 269' T.D.H.

Does Well Pump Sand? YES / NO If So, How Much?

Test #1 1/8 " in Gallon Jar
Test #2 ____ " in Gallon Jar
Test #3 ____ " in Gallon Jar

Closed Valve Test: P.S.I. Reading ____ Water Level ____

Vibration Record: Vibration in Mils:

A ____ 90* from Discharge
B ____ In Line with Discharge
C ____ 90* from Discharge
D ____ In Line with Discharge

Tested By: Eugene D. and Mike T.

Problems/Comments: Could not get amps, could not get good reading on the draw down because there were holes in the drop pipe and water was leaking back into the well.

TURBINE PUMP
(MOTOR, PUMP, PERFORMANCE RECORD)

(AS INSTALLED) **DATE:** February 21, 2008

GENERAL INFO: Customer/Owner: Medina Morningside Well/Pump #: 2
Address/Location: 2522 Bobolink Road
Persons on Job Site: Steve and Grey

MOTOR INFO: Horsepower 20 Stand Still Volts 248/249/247 Running Volts 243/244/245
Manufacturer Franklin R.P.M. 3450 Full Load Amps 53.8 S.F.Amps/_____

BOWL DESIGN: G.P.M. 225 T.D.H. 260' Megger Reading 1000

PERFORMANCE TEST: Static Water Level 149' Well Diameter 12" Well Depth 197'

Test #1: HZ 60 AMPS 54/55/56 Gallons Per Minute_____ Water Level 159-6 P.S.I. 60 T.D.H.____
Test #2: HZ ___ AMPS / / Gallons Per Minute_____ Water Level _____ P.S.I._____ T.D.H. _____
Test #3: HZ ____ AMPS / / Gallons Per Minute_____ Water Level _____ P.S.I._____ T.D.H. _____

T.D.H. = Pumping Water Level in Feet + (P.S.I. reading x 2.31) + Friction Loss In Column + Fittings
Example: Information Given: 1000 G.P.M., 150' Water Level, 50 P.S.I.,3.5' Friction Loss
Therefore: 150' + (50# x 2.31 or 115.5') + 3.5' = 269' T.G.H.
OR
The pump is producing 1000 G.P.M. at 269' T.D.H.

Does Well Pump Sand? YES / NO If So, How Much?

Test #1 1/8 " in Gallon Jar
Test #2 _____ " in Gallon Jar
Test #3 _____ " in Gallon Jar

Closed Valve Test: P.S.I. Reading _____ Water Level _____

Vibration Record: Vibration in Mils:

A _____ 90* from Discharge
B _____ In Line with Discharge
C _____ 90* from Discharge
D _____ In Line with Discharge

Tested By: Eugene D. and Jim K.

Problems/Comments:

Customer/Owner Comments: Hamel # 3

TURBINE PUMP
(MOTOR, PUMP, PERFORMANCE RECORD)

(AS INSTALLED) **DATE:** February 29, 2008

GENERAL INFO: Customer/Owner: Medina – Morningside Pump House Well/Pump #: 2
Address/Location: 2522 Bobolink
Persons on Job Site: Steve and Grey

MOTOR INFO: Horsepower 20 Stand Still Volts 247/247/249 Running Volts 243/243/245
Manufacturer Franklin R.P.M. 3450 Full Load Amps 53.8 S.F.Amps/ 60.6

BOWL DESIGN: G.P.M. 225 T.D.H. 260' Megger Reading 1000 +

PERFORMANCE TEST: Static Water Level 149' Well Diameter 12" Well Depth 197'

Test #1: HZ 60 AMPS 55/55/55 Gallons Per Minute 230 Water Level 161 P.S.I. 44 T.D.H. 263'
Test #2: HZ 60 AMPS 51/51/51 Gallons Per Minute 215 Water Level 158' 6" P.S.I. 62 T.D.H. 302'
Test #3: HZ 57.8 AMPS 35/45/46 Gallons Per Minute 155 Water Level 156' P.S.I. 66 T.D.H. 308'

T.D.H. = Pumping Water Level in Feet + (P.S.I. reading x 2.31) + Friction Loss In Column + Fittings
Example: Information Given: 1000 G.P.M., 150' Water Level, 50 P.S.I.;3.5' Friction Loss
Therefore: 150' + (50# x 2.31 or 115.5') + 3.5' = 269' T.G.H.
OR
The pump is producing 1000 G.P.M. at 269' T.D.H.

Does Well Pump Sand? NO If So, How Much?

Test #1 Trace " in Gallon Jar
Test #2 Trace " in Gallon Jar
Test #3 Trace " in Gallon Jar

Tested By: Eugene D. and Eric F.

Problems/Comments: We tightened 3" fitting on discharge head that were leaking slowly. And then tested pump performance for the base line installation test.

Customer/Owner Comments:

DATE: 2/14/08 WELL #: 2 SIZE: 12" STATIC: 147'

NAME: Medina No. 2

PICTURE QUALITY _____ WELL CASING DEPTH: 179' 6"

WELL DEPTH: 198' AMOUNT OF WATER: _____

DEPTH IN FEET	LOG
4'	Top of well
13'	T & C Joint
37'	T & C Joint
57'	T & C Joint
77'	T & C Joint
99'	T & C Joint
119'	T & C Joint
121'	Slight Scale
141'	T & C Joint
147'	Static
161'	T & C Joint
176' 6"	Top of Screen
179'	Top of Packer / Top of screen 179' 6"
181'	Slight incrustation
198'	Bottom
	Screen slightly plumbed last 6'
	Debris in bottom

BERGERSON - CASWELL INC.

Commercial • Municipal • Residential
Geothermal • Irrigation
Submersible & Turbine Pumps
Environmental Drillers

Well Drilling, Abandonment & Repair Since 1948

Certified Well Drillers
Certified Pump Installers

March 3, 2008

CITY OF MEDINA
Attn: Mr. Steve Scherer
2052 County Road 24 (763) 473-4643
Medina, MN 55340-9790 (763) 473-9359

RE: INVOICE FOR MORNINGSIDE WELL PUMP #2 SERVICE INSPECTION

Dear Mr.Scherer :

Bergerson-Caswell, Inc. appreciates the opportunity to assist you with your well pump needs. As per our project bid and your approval we have completed the Mourning-side well #2 pumping equipment inspection project. Below is the project cost breakdown, and enclosed with this invoice are the project documents for the services performed, testing results and what we installed.

PROJECT INVOICE AMOUNT:

1) Labor and equipment to remove, reinstall, and test well pump.	$ 2,850.00
2) Shop labor to locate, prepare and load materials required for completing this project.	200.00
3) Grundfos 230S200- 6-stage pump (190 gpm @ 300'TDH)	2,090.00
4) 20 Hp, 230 volt 3-phase, 3450 rpm, 6" submersible motor	1,969.00
5) 170' of AWG #6-3 conductor with ground flat submersible wire at $3.40/ft.	578.00
6) 168'of 3" Drop pipe, Black sch 40 steel $12.75/ft.	2,142.00
7) Misc. Pipe wrap, submersible splice kit, gaskets, chlorine, 1" poly for water level monitoring	175.00
8) Re-Construct well-head, 3.5 hrs @ $65.00/hr	227.50
Materials :	250.00
9) Video Investigation of the well and casing	1,000.00
10) Wire brush well casing for removing scale & cleaning prior to video	1,200.00
TOTAL WELL PUMP REPLACEMENT PROJECT INVOICE AMOUNT	**$ 12,681.50**

If you have any questions on this proposal, or would like to discuss it, please do not hesitate to contact us at (763) 479-3121 or cell (612) 369-3652.

Sincerely,
BERGERSON-CASWELL

Tim D. Berquam Project Manager

5115 Industrial St., Maple Plain, MN 55359 (763) 479-3121 Fax (763) 479-2183

MEMORANDUM

TO:	**City Council, through City Administrator Chad Adams**
FROM:	**Steve Scherer, Public Works Superintendent**
DATE:	**September 15, 2010**
MEETING DATE:	**September 21, 2010**
SUBJECT:	**Quotes for Repair of Pump and Motor for Well #3**

Recently the City had the pump motor in Well #3 fail. It has a dead short between the windings, which could have been caused by either power loss while running, power fluctuations, or lightning. There is a history with power issues at this well. I will be recommending electrical motor protection (below) to resolve this issue in the future.

The City received the following two quotes to repair Well #3:

- Bergerson – Caswell Inc. $7,725.00
- E.H. Renner & Sons $9,718.00

Both quotes include a comparable electrical protection option, electrical wire and install cost, as well as a rebate from Xcel Energy.

I am recommending Bergerson-Caswell Inc. at the estimated total repair cost of $7,725.00, which includes a project cost of $4775.00, Electrical Protection Option 1 of $2,700.00, electrical wire and install cost of $1500.00, plus a rebate from Xcel Energy of $1,250.00.

Feel free to read the full report from Bergerson-Caswell to get the complete history concerning Well #3. We feel confident that the pump itself is in good shape and we will be able to re-use all of the existing piping; however, we won't know the full extent of the damage until the pump is pulled.

BERGERSON-CASWELL
INCORPORATED

Bergerson - Caswell Inc.
5115 Industrial Street
Maple Plain, MN 55359

September 8, 2010

CITY OF MEDINA
Attn: Mr. Steve Scherer
2052 County Road 24 (763) 473-4643
Medina, MN 55340-9790 (763) 473-9359

RE: WELL PUMP #3 FAILURE & RECOMMENDATIONS FOR REPAIR

Dear Mr.Scherer :

Bergerson-Caswell, Inc. appreciates the opportunity to assist you with your well pump needs. We inspected well pump #3 yesterday and discovered the submersible motor has failed. It has a dead short between the windings which could have been caused a couple of different ways. If it were running and the power company lost a phase. It was hit by lighting. A wide varying range of power (high –low) that is uneven on all three legs. Possibly the motor power leads are shorting to ground.

Based on the length of time this installation has been in the ground and the recent history that we have with the installation I believe this installation does have a power problem. We repaired and reconditioned the entire installation in 2007, then 18 months later the motor failed which we did warrant, and now it is 2 years later and it has failed again. This type of failure is occurring in roughly the same length of time, which indicates weakening a motor over time with the varying voltage as mentioned above. I was looking through a few of our performance tests and located one were the voltage supplied from Xcel Energy was 504/ 506/ 507 volts on the three different phases, and 18 months later during the next test the power supplied was 480/ 481/ 480 volts. The first test has voltages that are just above the allowed voltages for power supplier. Our tests are instantaneous, and may not be a good representation of what the pump motor actually is supplied.
This varying power is not uncommon in rural areas, and there are ways to clean the power a motor receives with VFD's and DVDT line filters. It is difficult to determine what exactly caused the failure, especially before the equipment has even been removed from the well. Therefore my thoughts above are just initial references to use for trouble shooting. The pump has to be removed too determine the cause of the failure, and even then it may not provide obvious answers.

Below is a cost to remove the pump, replace the motor and other required materials for reinstallation, along with pricing for other materials that are a part of this installation, but as always the final project cost will be based on the actual components replaced.

PROJECT COST Labor to remove well pump #3 and inspect it for evaluation:

1) Labor and equipment to mobilize, remove pump, & check current well variables.	**$ 1,150.00**
2) Inspect all pumping equipment removed from well, recommend options/ actual costs for repair, and replacement. Furnish owner with report.	**$ 200.00**

3)Materials that maybe needed to recondition/ replace in WELL PUMP #3

4"x 20' Certa Lock PVC submersible drop pipe @ $ 240.00/each, (13 total)	
4" Certa Lock PVC coupling, @ $44.00/each, (14 total)	
4" Certa Lock coupling splines @ $2.75/each, (28 total)	
4" Certa Lock coupling SS set screws @ $5.00/100 ct bag, (total 84)	
4" Certa Lock x MPT adapter Nipple @ $86.50/each	
Grundfos 150S150- 6-stage pump (150 gpm @ 230'TDH) @ $2,475.00	
15 Hp, 480 volt, 3-phase, 3450 rpm, 6" submersible motor	**1,500.00**

275' of AWG #8-3 conductor with ground flat submersible wire at $4.50/ft. or $1,237.50
Misc. SS banding, water level monitoring tubing, submersible splice kit, gaskets,
bolting, pipe wrap, etc... **475.00**
4) Labor to reinstall pump unit and test into the system **1,450.00**

ESTITMATED TOTAL PROJECT COST $4,775.00
Note This total is for the outlined items, If more or less materials are needed this total will be adjusted**

Additional Items requested for electrical protection options:

Option 1) ABB VFD 20 Hp at 460V; Model #ACH550-UH-031A-4 $ 2,700.00
Standard VFD in NEMA 1-UL type enclosure: 5% swinging DC reactor,
EMI/RFI filter: 31amps at 460V;23.0in H x 8.0in W x 9.1in D Wt: 35 lbs.
-TCI V1K27A01 Motor Protection dv/dt Filter:20 HP/480V
27 Amp: UL Type 1 enclosure 9 x 5.5 x 10 Wt: 15 lbs.

Option 2) Franklin Sub Monitor Premium: Model #586 000 5100 $ 1,335.00
This panel mount NEMA 3R monitor has to be installed near existing
Starter so the wires can be routed through this unit. It does require
an additional 120 V power supply to power the unit

Both Options require an electrician to install and wire, as well as we would return to program and startup the installation. As an estimate the **cost for electrical #1) $1,500.00, and #2) $750.00,** but option #1 has an Xcel Energy **rebate of $1,250.00.**

If you have any questions on this proposal, or would like to discuss the information enclosed, please do not hesitate to contact us at (763) 479-3121 or cell (612) 369-3652.

Sincerely,
BERGERSON=CASWELL

Tim D. Berquam Project Manager

EXHIBIT A

BERGERSON-CASWELL
INCORPORATED

Bergerson - Caswell Inc.
5115 Industrial Street
Maple Plain, MN 55359
(763) 479-3121 Fax: (763) 479-2183

November 16, 2010

CITY OF MEDINA
Attn: Mr. Steve Scherer
2052 County Road 24 (763) 473-4643
Medina, MN 55340-9790 (763) 473-9359

RE: MORNINGSIDE WELL PUMP #1 SERVICE INSPECTION

Dear Mr. Scherer:
Bergerson-Caswell, Inc. appreciates the opportunity to assist you with your well pump needs. We met at the pump house and determined there is indeed either a hole in the drop pipe or the pump assembly is wearing out quickly. Most likely a hole in the drop pipe, and the pump cannot build pressure and shut off. This can be verified when the pump is removed and inspected. Based on the equipment that is in this well I have provided additional pricing for other components that may be required as well as services to the well, such as wire brushing and air lifting the materials that have deteriorated from the casing. These items are itemized below and based on the following installation data. The pump is a 4" Webtrol series 70- (10 Hp) but the motor is a 6" 15 Hp Franklin 230v/3ph/60hz, & it is set on Galvanized 3" approximately 178' deep, with AWG #6 Flat submersible wire (that may need a ground), and it is unclear if there is a check valve in line, but if so it would be a 3" check valve. Therefore we have provided costs for these items below.

PROJECT COST:

1) Labor and equipment to remove, reinstall, and test well pump.		$ 2,450.00
Materials that maybe required		
2) Shop labor to locate, prepare and load materials required for completing this project.		200.00
3) Hydroflo 5HL-6stage bowl (110 gpm @ 300'TDH) DI castings & 304 SS impellers, 75% eff.		1,775.00
4) 10 Hp, 230 volt, 3-phase, 3450 rpm, 6" submersible motor		1,360.00
5) 185' of AWG #6-3 conductor with ground flat submersible wire at $3.20/ft.		592.00
5A) 185' AWG #10 ground wire and clamp if existing wire is 3-conductor, & reused: $.68/ft		
6) 178'of 3" Drop pipe, Black sch40 steel $12.75/ft. and Galvanized sch40 steel $19.95/ft		2,269.50
6) 3" DI check valve $170.00 or Bronze Check Valve $330.00		170.00
7) Misc. Pipe wrap, submersible splice kit, chlorine, & 1" poly for water level monitoring		175.00
TOTAL SUBMERSIBLE WELL PUMP REPLACEMENT COST	**$ 8,991.50**	
ADDITIONAL SERVICES PRICING:		
Video Investigation of the well and casing	950.00	
Wire brush well casing for removing scale & cleaning inside of well casing	1,200.00	
Air Lift debris from well 4 hours @ $200.00/hr	800.00	

This above total reflects a complete component replacement, not until the pump has been removed and the pumping equipment inspected, will we have any recommendations for component replacement. We can assume one pipe and/ or the pump as a minimum should be replaced because one of them is not performing. The pump quoted above does have a 1-2 week lead time, but all other items are stock, we can look for other pump options if time is a concern.

If you have any questions on this proposal, or would like to discuss it, please do not hesitate to contact us at (763) 479-3121 or cell (612) 369-3652.

Sincerely, **BERGERSON=CASWELL** Tim D. Berquam Project Manager

Bergerson - Caswell Inc.
5115 Industrial Street
Maple Plain, MN 55359
(763) 479-3121 Fax: (763) 479-2183

May 26, 2016

CITY OF MEDINA
Attn: Mr. Steve scherer
600 Clydesdale Trail (763) 473-8842
Medina, MN 55340

RE: QUOTE FOR WELL #4 INSPECTION DUE TO FAILURE

Dear Mr. Scherer;
Bergerson-Caswell Inc. appreciates the opportunity to assist you with your well and pump needs. As requested we removed and inspected the well #4 installation. This pump quit working and is tests with a dead short, and will need to be repaired or replaced. This well pump has been installed since 2003 and is over sized for your current needs of pumping to the water treatment plant. Based on what we uncovered the motor requires reconditioning & rewinding (if reused) or it can be replaced with new. Now if it is to be replaced I would recommend a 125 Hp motor and de-staging the pump to a 7 stage pump. And the final option is to replace entire pump and motor with a high speed Grundfos pump and Franklin Motor. in addition to these items I have recommended and listed out a few additional items no matter which option is elected, two new check valves, pitless o-rings and cover gasket also need to be replaced along with some other misc. items. Below is a breakdown of pricing for these specific items.

PROJECT COST

Mobilize to site a well rig, with all necessary equipment to remove and
Reinstall the pump installation, discharge head, 200 Hp motor, piping
Level monitor, rewire and startup $7,100.00

Select one of these next Four options, and the items on the following page

1) Replace 200 Hp with Hitatchi identical submersible motor $ 37,850.00
Repairing pump $2,000.00 $39,850.00
Available within a week

Recondition, & rewinding your submersible 200 Hp motor, all shipping is included
And recondition your existing pump with bearings $18,550.00
Note this is assuming just a rewind no additional major parts are needed.
Not until the motor is torn down will they know exactly what the costs will be, but they will provide a tear down inspection report before any work is performed
This repair will require an estimated 9-10 weeks to preform

2) Purchase new 125 Hp SME submersible motor and recondition your pump
De-staging to a 7 stage pump assembly that will produce 800 Gpm @ 460'TDH
Available within a week $23,085.00

3) Purchase new High speed 125 Hp Franklin submersible & Grundfos
800S1250-5, Pump assembly to produce 800 Gpm @ 505'TDH $20,350.00
Available within a few days

There are additional items on the following page that will also be required as part of this project & costs

FURNISH & INSTALL NEW PARTS **$4,020.00**

Clean up loose Mg from drop pipe so it can be reused	$250.00 to $850.00
If you would like epoxy coating on column add $3,000.00	
F & I (2) New 8" Flowmatic 80 DIX check valve @ $1,075.00	$2,150.00
8"x 6" Swage Nipple Heavy Duty	$ 450.00
Baker Monitor Pitless O-rings (set)	$ 250.00
Pittless cover gasket	$ 170.00
Wire Submersible splice kit 3 each at $50.00	$ 150.00

TOTAL PROJECT COST BASED ON REQUESTED BID ITEMS. $29,670.00 – 50,970.00

If you have any questions regarding this proposal, require additional information, or would like for us to perform one of these services for you, please do not hesitate to contact us at (763)-479-3121ext #210, or my cell # (612) 369-3652.

Sincerely,

BERGERSON-CASWELL INC. Tim Berquam Project Manager

Appendix 2

Water Level Monitoring Plan

Medina Water Level Monitoring Plan

Source	Monitoring Type	Frequency
Morningside No. 1	Sounder	Weekly
Morningside No. 2	Sounder	Weekly
Independence Beach No. 1	Sounder	Weekly
Independence Beach No. 2	Sounder	Weekly
Hamel No. 3	SCADA	Continuous
Hamel No. 4	SCADA	Continuous
Hamel No. 5	SCADA	Continuous
Hamel No. 6	SCADA	Continuous
Hamel No. 7	SCADA	Continuous

Appendix 3

Water Level Graphs for each Water Supply Well

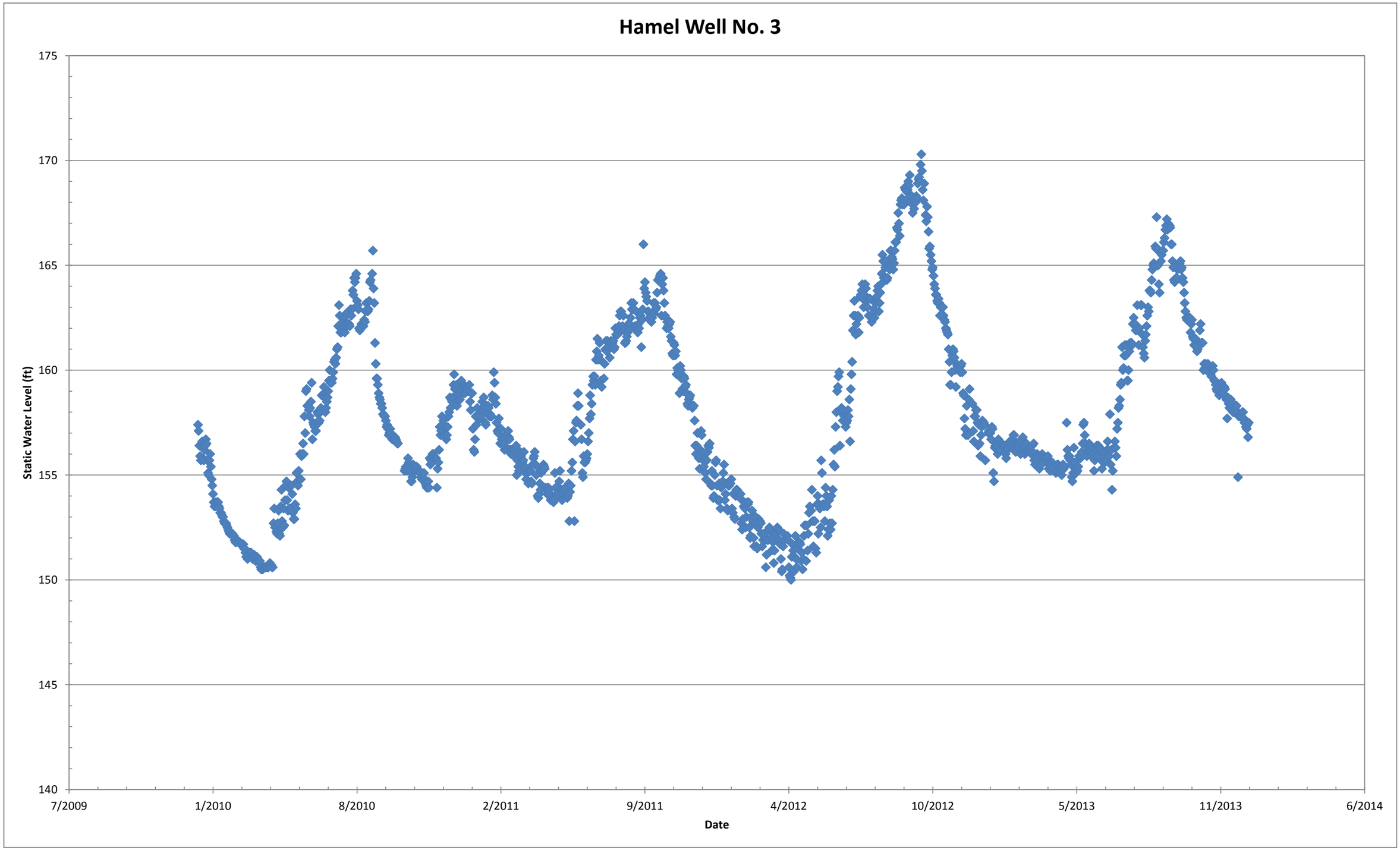
Hamel Well No. 3
175
170
165
160
155
150
145
140
Static Water Level (ft)
7/2009
1/2010
8/2010
2/2011
9/2011
4/2012
10/2012
5/2013
11/2013
6/2014
Date

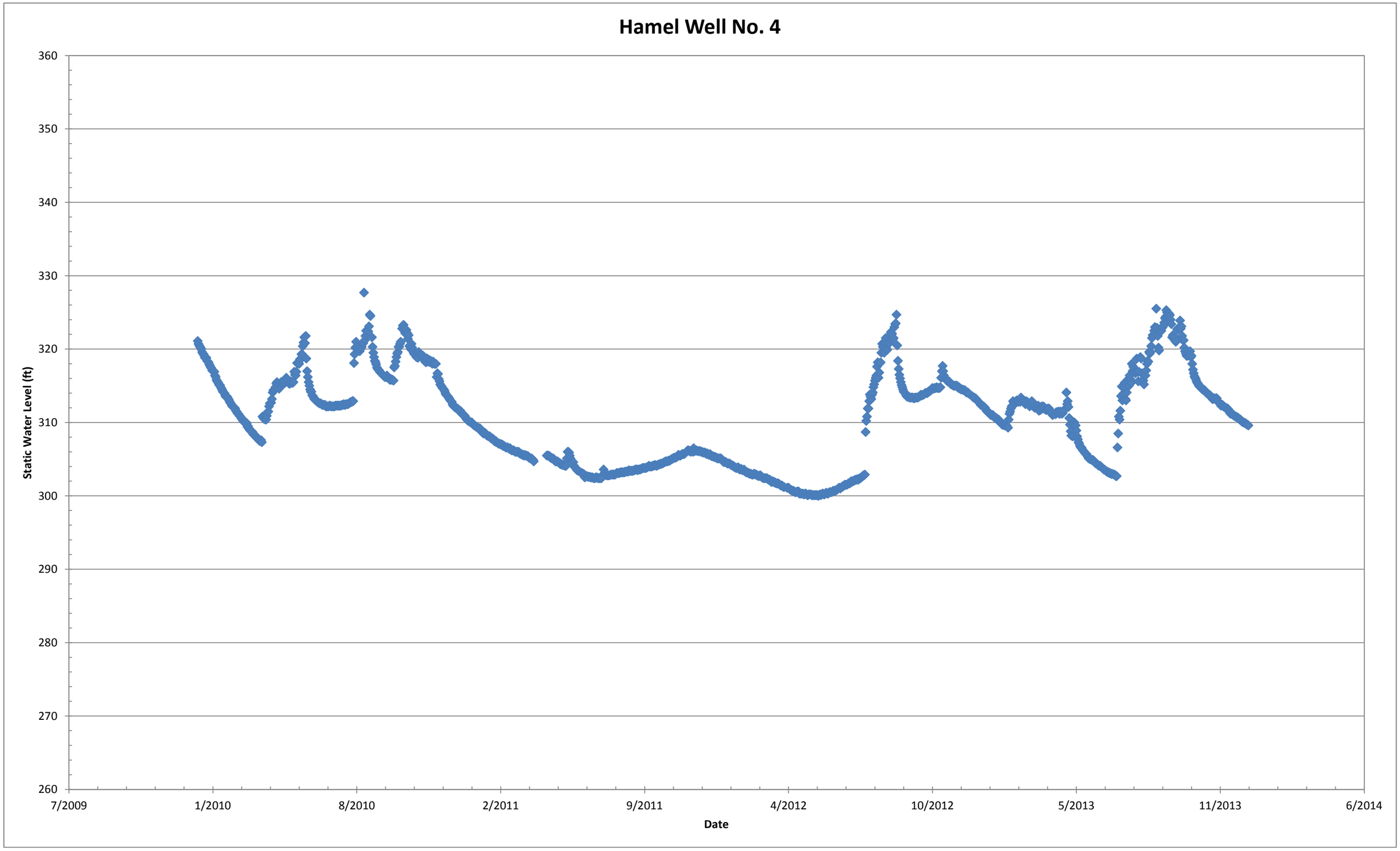
Hamel Well No. 4
Static Water Level (ft)
360
350
340
330
320
310
300
290
280
270
260
7/2009
1/2010
8/2010
2/2011
9/2011
4/2012
10/2012
5/2013
11/2013
6/2014
Date

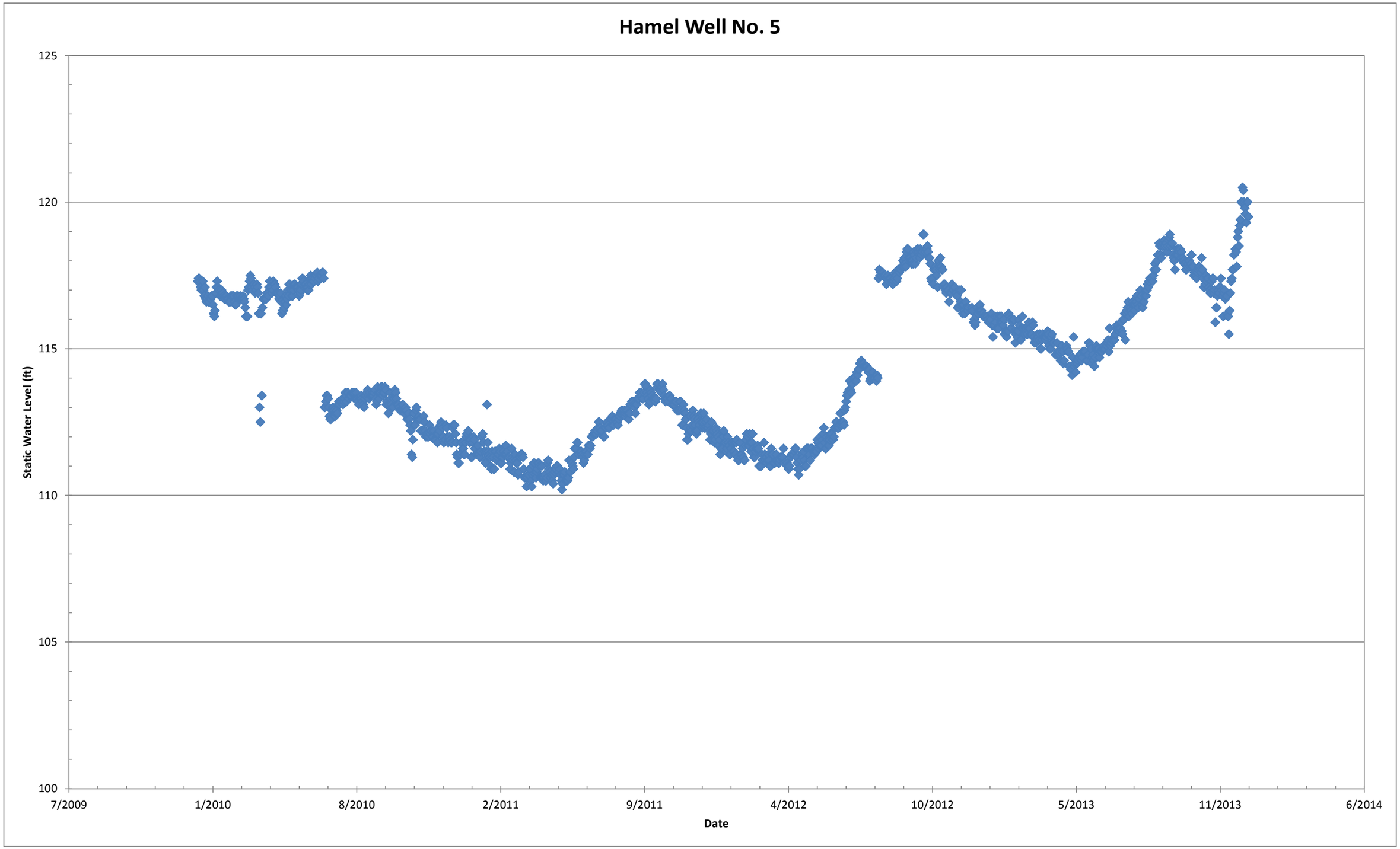
Hamel Well No. 5
125
120
115
110
105
100
Static Water Level (ft)
7/2009
1/2010
8/2010
2/2011
9/2011
4/2012
10/2012
5/2013
11/2013
6/2014
Date

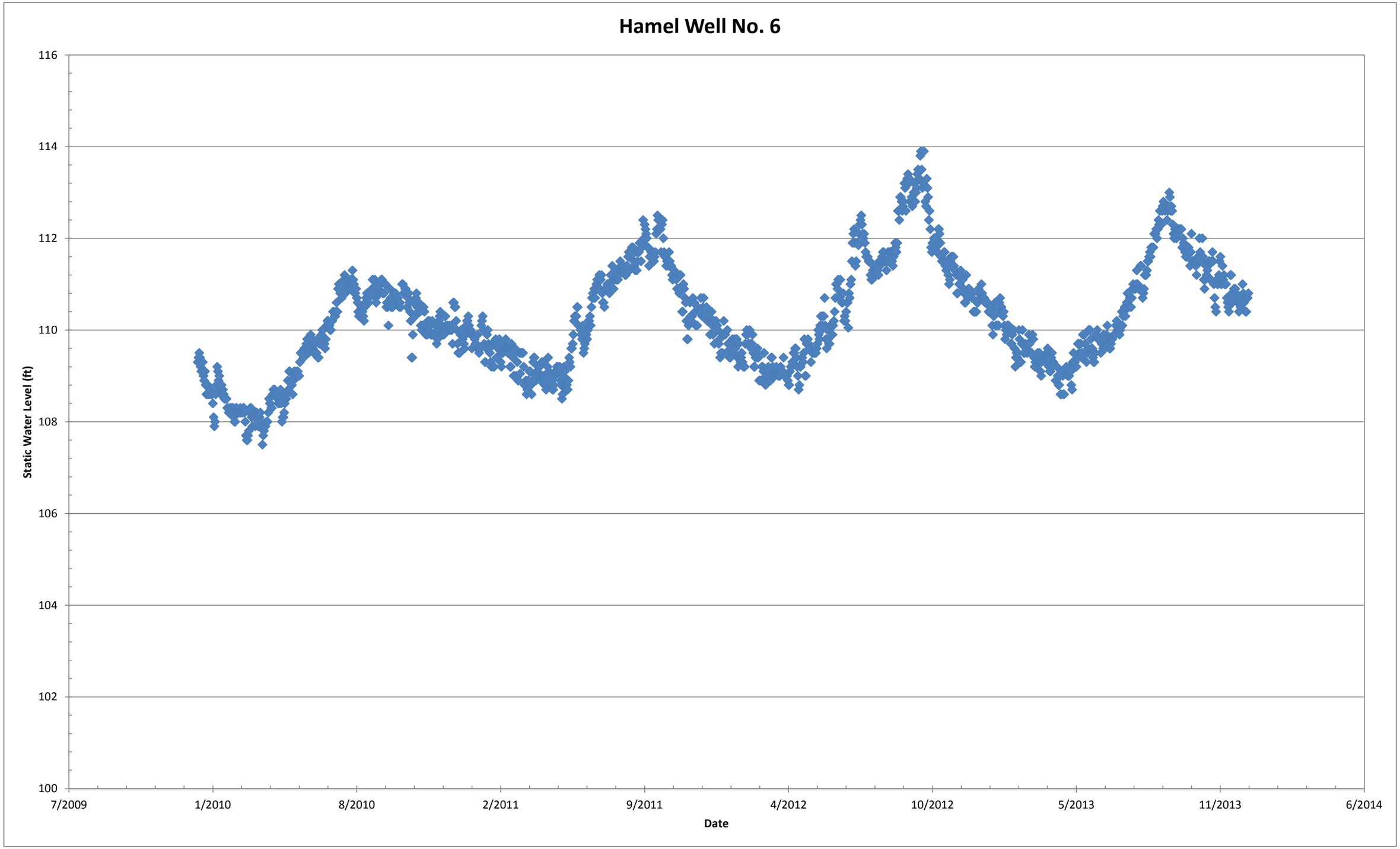
Hamel Well No. 6
Static Water Level (ft)
116
114
112
110
108
106
104
102
100
7/2009
1/2010
8/2010
2/2011
9/2011
4/2012
10/2012
5/2013
11/2013
6/2014
Date

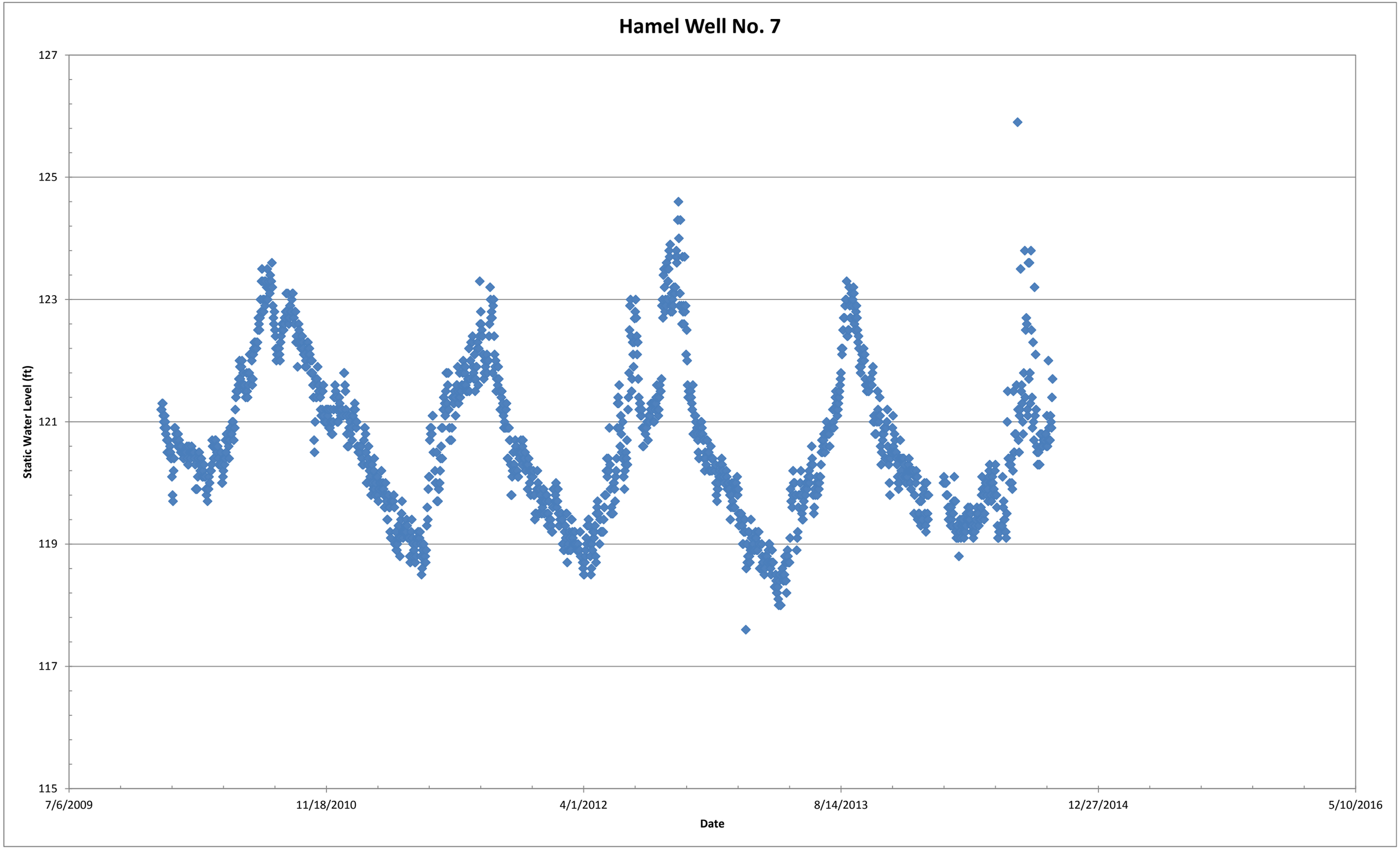
Hamel Well No. 7
127
125
123
121
119
117
115
Static Water Level (ft)
7/6/2009
11/18/2010
4/1/2012
8/14/2013
12/27/2014
5/10/2016
Date

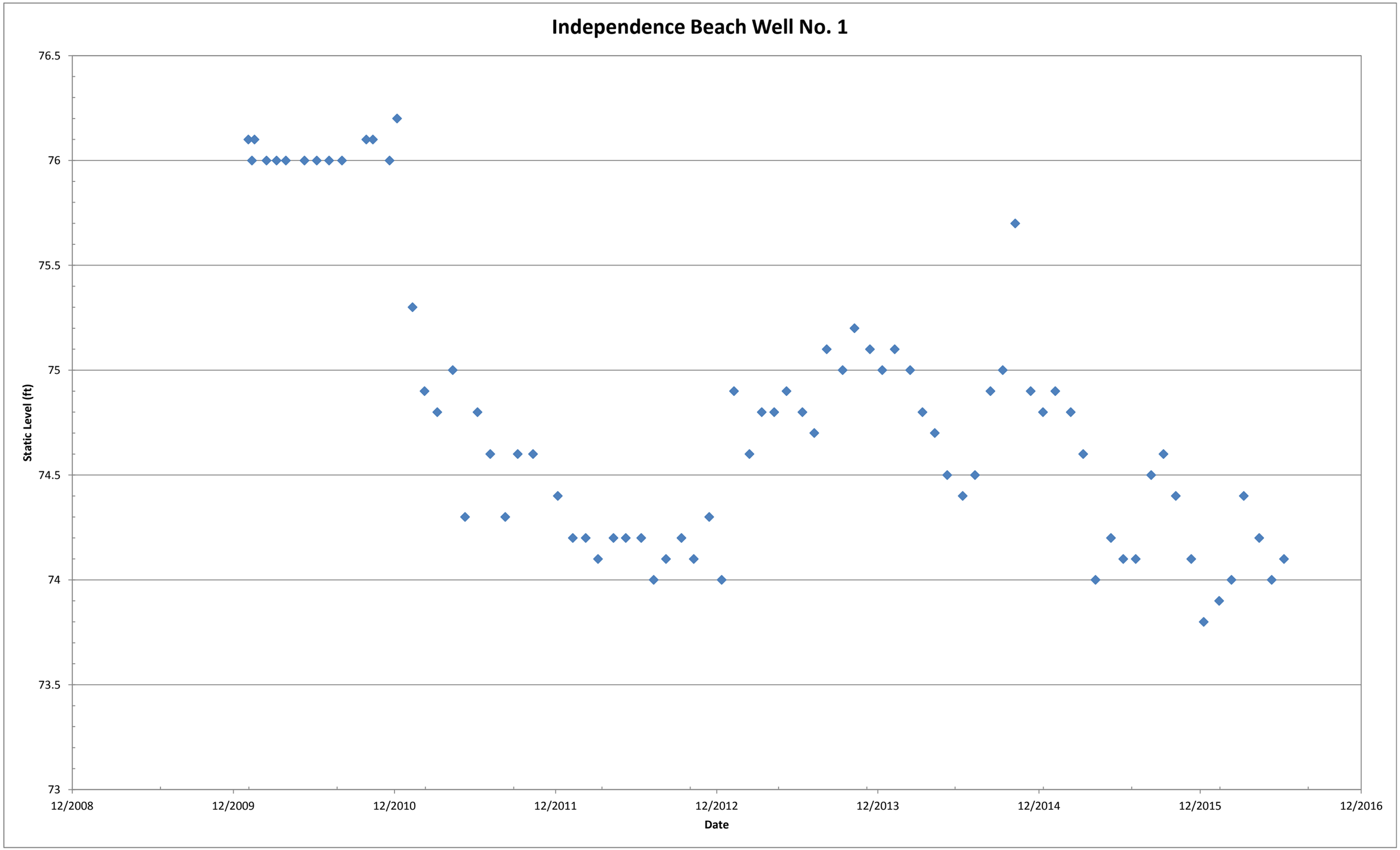
Independence Beach Well No. 1
76.5
76
75.5
75
74.5
74
73.5
73
Static Level (ft)
12/2008
12/2009
12/2010
12/2011
12/2012
12/2013
12/2014
12/2015
12/2016
Date

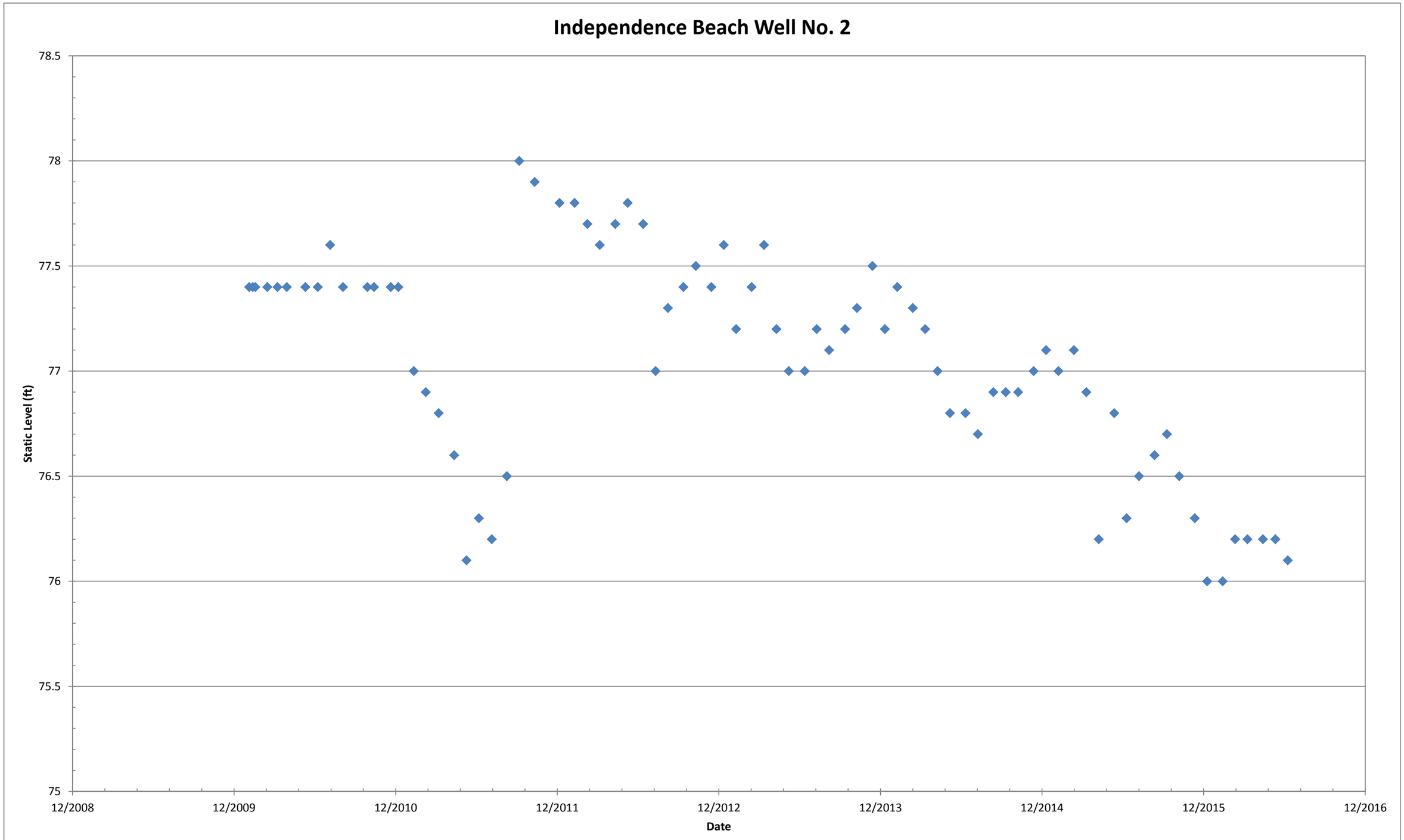
Independence Beach Well No. 2
78.5
78
77.5
77
76.5
76
75.5
75
Static Level (ft)
12/2008
12/2009
12/2010
12/2011
12/2012
12/2013
12/2014
12/2015
12/2016
Date

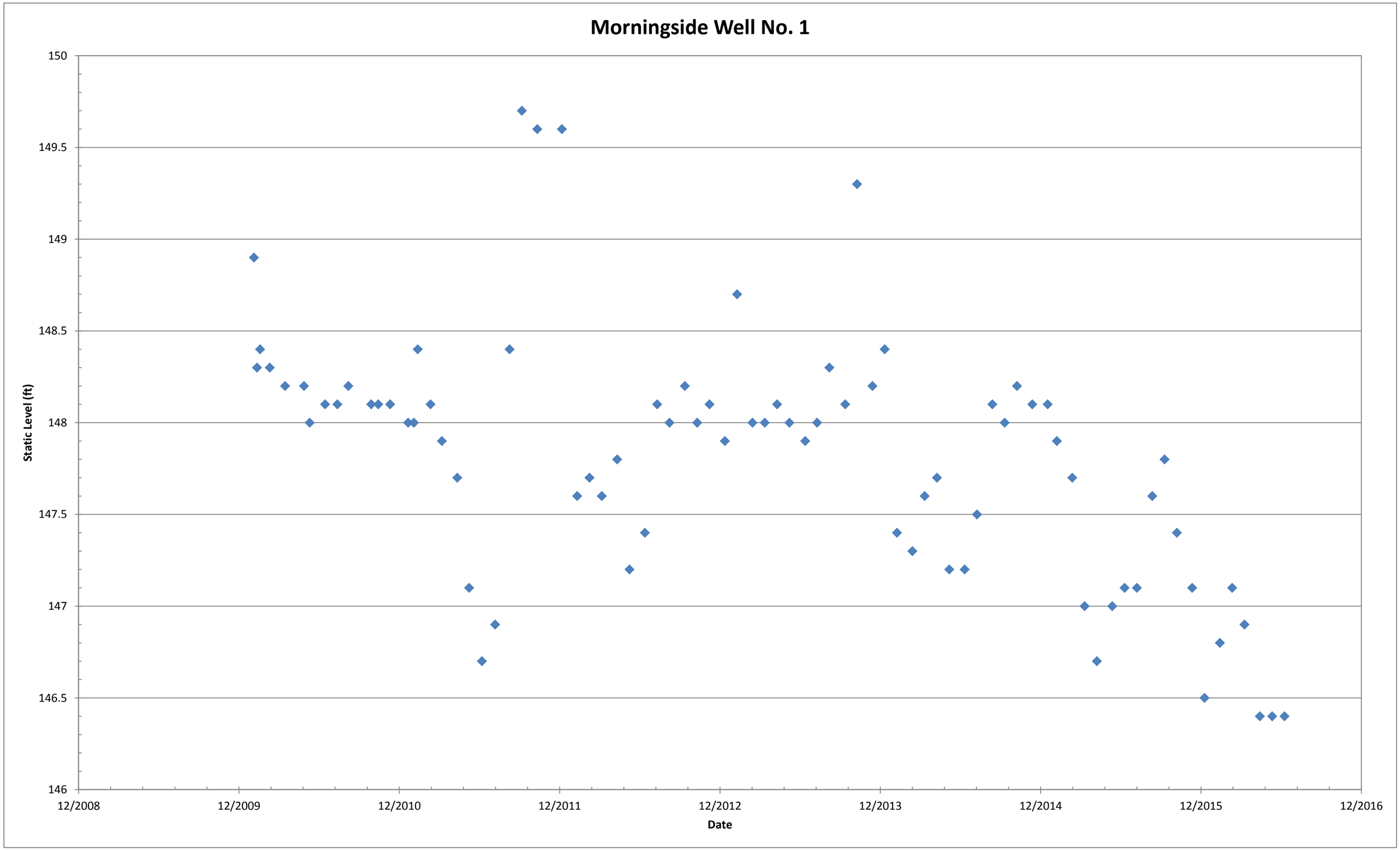
Morningside Well No. 1
Static Level (ft)
150
149.5
149
148.5
148
147.5
147
146.5
146
12/2008
12/2009
12/2010
12/2011
12/2012
12/2013
12/2014
12/2015
12/2016
Date

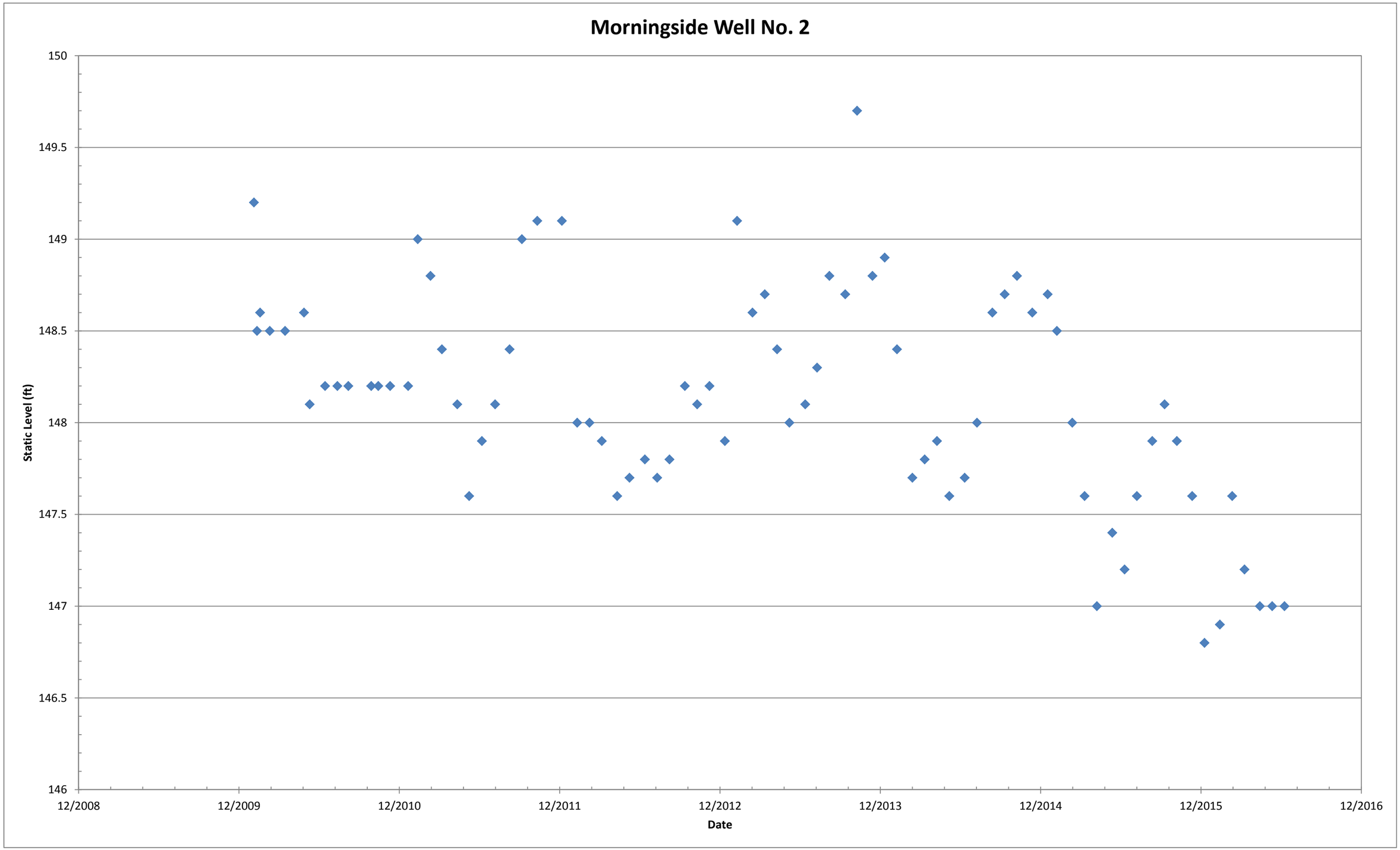
Morningside Well No. 2
Static Level (ft)
150
149.5
149
148.5
148
147.5
147
146.5
146
12/2008
12/2009
12/2010
12/2011
12/2012
12/2013
12/2014
12/2015
12/2016
Date

Appendix 4

Capital Improvement Plan

#12

2016 - 2020 Capital Improvement Plan

2016 CIP: DEPARTMENT	2016		2017		2018		2019		2020		
	Project Cost	City Proposed Portion	Project Cost	City Proposed Portion	Project Cost	City Proposed Portion	Project Cost	City Proposed Portion	Project Cost	City Proposed Portion	Potential Revenue Source
Tamarack North of Medina to Blackfoot Overlay							$ 54,000	$ 43,200			Reserves/Bonds/Assessments
Tamarack - Medina to 24 - Overlay							$ 49,985	$ 39,988			
Tamarack City Limits to CSAH 24 Overlay							$ 77,675	$ 62,140			Reserves/Bonds/Assessments
Clydesdale trail overlay 116 to 600			$ 80,000	$ 40,000							Reserves/Bonds/Assessments
600 Clydesdale - Parking Lot	$ 20,000	$ 20,000	$ 20,000	$ 20,000	$ 20,000	$ 20,000	$ 20,000	$ 20,000			Reserves/Bonds/Assessments
Oakview Road - Overlay							$ 43,000	$ 21,500			Reserves/Bonds/Assessments
Deer Hill Road East - Overlay							$ 27,040	$ 13,520			Reserves/Bonds/Assessments
Dusty Trail - Overlay							$ 3,900	$ 1,950			Reserves/Bonds/Assessments
Morgan Rd.											Reserves/Bonds/Assessments
Independence Beach Overlay											Reserves/Bonds/Assessments
Tower Recon - Tower Drive Schedule A & K											MSA/Bonds/Assessments
Tower Recon - Hamel Road West Schedule B & L											MSA/Bonds/Assessments
Tower Recon - Hamel Road East Schedule C & M											MSA/Bonds/Assessments
Tower Recon - Kilkenny Lane Schedule D											MSA/Bonds/Assessments
Chestnut Road - Overlay					$ 50,000	$ 25,000					Reserves/Bonds/Assessments
Hickory Drive - Reconstruct					$ 180,427	$ 90,214					Reserves/Bonds/Assessments
Comanche Trail Overlay	$ 24,125	$ 13,563									Reserves/Bonds/Assessments
Chippewa Road West overlay											Reserves/Bonds/Assessments
Lakeview Road overlay	$ 47,232	$ 23,616									Reserves/Bonds/Assessments
Willow Drive Orono to 24 Overlay											Reserves/Bonds/Assessments
Willow Drive N of Chippewa overlay blacktop portion			$ 59,000	$ 47,000							Reserves/Bonds/Assessments
Willow Drive North to 24 - reclaim					$ 200,000	$ 160,000					Reserves/Bonds/Assessments
Wichita Trail overlay			$ 125,086	$ 62,543							Reserves/Bonds/Assessments
Tower Drive West of Pinto Overlay					$ 30,000	$ 15,000					Reserves/Bonds/Assessments
Cottonwood Trail Upgrade	$ 91,000	$ 13,000									Reserves/Bonds/Assessments
Iroquois Drive Overlay					$ 26,000	$ 13,000					Reserves/Bonds/Assessments
Willowbrook RD											Split/Orono Road Bond
Maplewood Drive Overlay					$ 29,328	$ 14,664					Reserves/Bonds/Assessments
Bobolink Road Overlay					$ 86,326	$ 43,163					Reserves/Bonds/Assessments
Morningside Road Overlay					$ 100,654	$ 50,327					Reserves/Bonds/Assessments
Elsinore Circle N of Morningside Rd Overlay					$ 18,789	$ 9,395					Reserves/Bonds/Assessments
Tuckborough/Hunter farms Addition overlay											Reserves/Bonds/Assessments
Townline Road CR11 to TH 55 Overlay											Independence funds/Road Bonds/Assessments
Sioux Drive Turn Lane	$ 200,000	$ 200,000									Road Bonds/MSA
Hwy 55 & CSAH101 Signal upgrade											Developer/Assessments (reimburse City)
Hwy 55 & CR 116 Whistleless Crossing											Reserves/MSA
Hwy 55 & CR 116 Intersection			$ 3,957,153	$ 858,443							TH 55 Intersect Capital Impr Fund/Fed & State Match/MSA
Roads Sub-total	$ 382,357	$ 270,179	$ 4,241,239	$ 1,027,986	$ 741,524	$ 440,762	$ 275,600	$ 202,298	$ -	$ -	
Tandem											Equipment Bonds/Cap Equip Fund
Crack Sealer											Equipment Bonds/Cap Equip Fund
Tanker	$ 20,000	$ 20,000									Equipment Bonds/Cap Equip Fund
1984 Grader rehab			$ 25,000	$ 25,000							Equipment Bonds/Cap Equip Fund
Replace 2007 550					$ 60,000	$ 60,000					Equipment Bonds/Cap Equip Fund

2016 - 2020 Capital Improvement Plan

2016 CIP: DEPARTMENT	2016		2017		2018		2019		2020		Potential Revenue Source
	Project Cost	City Proposed Portion	Project Cost	City Proposed Portion	Project Cost	City Proposed Portion	Project Cost	City Proposed Portion	Project Cost	City Proposed Portion	
Air Compressor (40% Parks)											Equipment Bonds/Cap Equip Fund
Sweeper											Grant
Brush Hog (50% Parks)	$ 5,000	$ 5,000									
Self propeled kick off broom					$ 40,000	$ 40,000					Equipment Bonds/Cap Equip Fund
Lift											Grant
Skid Steer Upgrade w/ Bucket	$ 5,000	$ 5,000									Equipment Bonds/Cap Equip Fund
Pickup Truck 3/4 Ton (50% Parks)	$ 30,000	$ 15,000									Equipment Bonds/Cap Equip Fund
Tandem Trailer											Equipment Bonds/Cap Equip Fund
Single Axle Truck					$ 220,000	$ 220,000					Equipment Bonds/Cap Equip Fund
Loader			$ 200,000	$ 200,000							Equipment Bonds/Cap Equip Fund
Miscellaneous	$ 2,500	$ 2,500									Equipment Bonds/Cap Equip Fund
Public Works Sub-total	$ 62,500	$ 47,500	$ 225,000	$ 225,000	$ 320,000	$ 320,000	$ -	$ -	$ -	$ -	
PD Squad Cars	$ 72,000	$ 72,000	$ 72,000	$ 72,000	$ 72,000	$ 72,000	$ 108,000	$ 108,000			Equipment Bonds/Cap Equip Fund
Traffic Squad					$ 35,000	$ 35,000					Equipment Bonds/Cap Equip Fund
PD Speed Trailers	$ 17,000	$ 17,000									Equipment Bonds/Cap Equip Fund
PD Squad Camera											Fed Drug Forfeiture Fund
PD Squad Portable Radios											DWI Forfeiture Fund
Portable Radios					$ 27,000	$ 27,000	$ 27,000	$ 27,000			DWI Forfeiture Fund
PD Squad Laptops/Software MDC					$ 40,000	$ 40,000					DWI Forfeiture Fund
PD Card Reader System											DWI Forfeiture Fund
Electronics (New PD Facility)											DWI Forfeiture Fund
Workout Equipment											DWI Forfeiture Fund/ Excellence Award
Bicycles			$ 2,000	$ 2,000							Equipment Bonds/Cap Equip Fund
Digital Speed Signs	$ 8,000	$ 8,000									Equipment Bonds/Cap Equip Fund
Lexipold Policy Software			$ 10,000	$ 10,000							Fed Drug Forfeiture Fund
Tasers	$ 5,000	$ 5,000	$ 5,000	$ 5,000							Equipment Bonds/Cap Equip Fund
Side Arms					$ 7,500	$ 7,500					DWI Forfeiture Fund
223 Rifles (2)	$ 5,000	$ 5,000									Equipment Bonds/Cap Equip Fund
Bunkers & Helmets			$ 7,500	$ 7,500							Equipment Bonds/Cap Equip Fund
Miscellaneous - Equip Fund											Equipment Bonds/Cap Equip Fund
Miscellaneous - DWI Fund	$ 6,000	$ 6,000	$ 4,000	$ 4,000							DWI Forfeiture Fund
Police Sub-total	$ 113,000	$ 113,000	$ 100,500	$ 100,500	$ 181,500	$ 181,500	$ 135,000	$ 135,000	$ -	$ -	
HAMEL											
SCBA Replacement											funded by grants/other
Mobile Radio Replacement											funded by grants/other
Lucas Tool											Equipment Bonds/Cap Equip Fund
Ongoing PPE Replacement	$ 10,000	$ -	$ 10,000	$ -	$ 10,000	$ -	$ 10,000	$ -	$ 10,000		Equipment Bonds/Cap Equip Fund
Bldg - Exhaust Removal System											Equipment Bonds/Cap Equip Fund
Thermal Imaging Camera											Equipment Bonds/Cap Equip Fund
Engine 11 Trash Line											Equipment Bonds/Cap Equip Fund
Hose - 1.75" & 2"											Equipment Bonds/Cap Equip Fund
Duty Officer Vehicle											Equipment Bonds/Cap Equip Fund
Ranger Vehicle											Equipment Bonds/Cap Equip Fund
E11 Rescue Tool Replacement											funded by grants/other
Defibrillator											funded by grants/other
Utility 11 Overhaul/retrofit	$ 21,667		$ 21,667		$ 21,667	$ -					Equipment Bonds/Cap Equip Fund
Command Vehicle Replacement			$ 4,320	$ -	$ 4,320		$ 4,320		$ 4,320		Equipment Bonds/Cap Equip Fund
Engine 11 Refurbishment							$ 20,000		$ 20,000		Equipment Bonds/Cap Equip Fund
Air Lift Bag Replacement											funded by grants/other
Pumper/Tanker	$ 38,917		$ 38,917		$ 38,917		$ 38,917		$ 38,917		Equipment Bonds/Cap Equip Fund
Portable JAWS Tool											funded by grants/other
Bldg Improvement											
Annual Contract		$ 70,000		$ 73,000		$ 73,000		$ 73,000		$ 73,000	Equipment Bonds/Cap Equip Fund
Hamel Fire Sub-total	$ 70,584	$ 70,000	$ 74,904	$ 73,000	$ 74,904	$ 73,000	$ 73,237	$ 73,000	$ 73,237	$ 73,000	
Loretto & Long Lake											
Fire (Loretto)	$ 19,000	$ 19,000	$ 20,000	$ 20,000	$ 21,000	$ 21,000	$ 22,000	$ 22,000			Equipment Bonds/Cap Equip Fund
Fire (Long Lake)	$ 6,000	$ 6,000	$ 6,000	$ 6,000	$ 6,000	$ 6,000	$ 6,000	$ 6,000			Equipment Bonds/Cap Equip Fund
Fire Sub-total	$ 25,000	$ 25,000	$ 26,000	$ 26,000	$ 27,000	$ 27,000	$ 28,000	$ 28,000	$ -	$ -	

2016 - 2020 Capital Improvement Plan

2016 CIP: DEPARTMENT	2016		2017		2018		2019		2020		Potential Revenue Source
	Project Cost	City Proposed Portion	Project Cost	City Proposed Portion	Project Cost	City Proposed Portion	Project Cost	City Proposed Portion	Project Cost	City Proposed Portion	
Emergency Operation Supplies (EOC)	$ 2,500	$ 2,500									Revolving Cap. Impr. Fund/ County Grant
Civil Defense Sirens			$ 30,000	$ 30,000							Revolving Cap. Impr. Fund/ County Grant
Civil Defense Sub-total	**$ 2,500**	**$ 2,500**	**$ 30,000**	**$ 30,000**	**$ -**	**$ -**	**$ -**	**$ -**	**$ -**	**$ -**	
Vehicle											Equipment Bonds/Cap Equip Fund
Administration Sub-total	**$ -**	**$ -**	**$ -**	**$ -**	**$ -**	**$ -**	**$ -**	**$ -**	**$ -**	**$ -**	
City Hall Repairs/Renovation	$ 15,000	$ 15,000	$ 10,000	$ 10,000	$ 15,000	$ 15,000	$ 10,000	$ 10,000			Revolving Cap. Impr. Fund
Community Building Repairs	$ 10,000	$ 10,000	$ 15,000	$ 15,000	$ 10,000	$ 10,000	$ 15,000	$ 15,000			Revolving Cap. Impr. Fund
PW//Police/City Hall Renovations											Recharacterization from Water Bonds
Police Server	$ 10,000	$ 10,000									Equipment Bonds/Cap Equip Fund
City Hall Server	$ 10,000	$ 10,000									Equipment Bonds/Cap Equip Fund
PW/PD Gas Pump Wiring	$ 5,000	$ 5,000									Revolving Cap. Impr. Fund
PW/PD Facility Roof											Revolving Cap. Impr. Fund
City Building Sub-total	**$ 50,000**	**$ 50,000**	**$ 25,000**	**$ 25,000**	**$ 25,000**	**$ 25,000**	**$ 25,000**	**$ 25,000**	**$ -**	**$ -**	
Water (high growth expectation)											
Independence Beach House Controls											Water Capital Improvement
Water Treatment Plant SCADA Upgrade											Water Capital Improvement
Water Treatment Plant Expansion					$ 1,400,000	$ 1,400,000					Future
Well #8/pump/controls											Water Capital Improvement
Pumphouse # 3 reconstruct/raw waterline											Water Capital Improvement
Generator											Water Capital Improvement
Utility Truck	$ 80,000	$ 40,000									Water Capital Improvement
Willow Dr Water Tower Rehab											Water Capital Improvement
Water Tower (and land acquisition)					$ 2,600,000	$ 2,600,000					Future (2020-2023)
Tower Recon - Hamel Road West Watermain											Water Capital Imp / Assessments
Tower Recon - Tower Dr WaterMain											Water Capital Imp / Assessments
Water Sub-total	**$ 80,000**	**$ 40,000**	**$ -**	**$ -**	**$ 4,000,000**	**$ 4,000,000**	**$ -**	**$ -**	**$ -**	**$ -**	
Generator (Foxberry or Ind Beach)											Sewer Capital Improvement
Sewer Pipe Cammera											Sewer Capital Improvement
Utility Truck	$ 80,000	$ 40,000									Sewer Capital Improvement
Vac & Jetter											Equip fund-Sewer/Stormwater
Extension - Others											Assessments/Sewer Capital
Gravity Sewer Replacement - Orono	$ 60,000	$ 60,000									Sewer Capital Improvement-27.4%
Tower Recon - Hamel Road West Sewer											Sewer Capital Imp/Assess
Tower Recon - Tower Dr Sewer											Sewer Capital Imp/Assess
Sewer Sub-total	**$ 140,000**	**$ 100,000**	**$ -**	**$ -**	**$ -**	**$ -**	**$ -**	**$ -**	**$ -**	**$ -**	
Willow Dr. Water Quality (WQ) Improvements											Road Bonds/ Assessments/ Storm Water Utility/ Grant
Vac & Jetter											Equip fund-Sewer/Stormwater
Tower Recon - Tower Dr Storm Pond											Storm Water Utility; Grants
PW Facility WQ Improvements											Elm Creek Watershed grants
Loretto Wetland Restoration/Creation											Storm Water Utility; Grants
Cottonwood Trail Infultration Basin	$ 5,000	$ 5,000									Storm Water Utility; Grants
Lake Independence WQ Improvements	$ 40,000	$ 14,000									Storm Water Utility; Grants
Stream/Ditch restoration in MCWD area	$ 55,000	$ 19,250									Storm Water Utility; Grants
Wetland restoration in MCWD area	$ 30,000	$ 10,500									Storm Water Utility; Grants
ISTS Repair and Replacement	$ 2,500	$ 875									Storm Water Utility
Rain Garden Implementation Program	$ 25,000	$ 8,750									SWU; Grants; Env. Fund

2016 - 2020 Capital Improvement Plan

2016 CIP: DEPARTMENT	2016		2017		2018		2019		2020		Potential Revenue Source
	Project Cost	City Proposed Portion	Project Cost	City Proposed Portion	Project Cost	City Proposed Portion	Project Cost	City Proposed Portion	Project Cost	City Proposed Portion	
Storm Water Sub-total	$ 157,500	$ 58,375	$ -	$ -	$ -	$ -	$ -	$ -	$ -	$ -	
[illegible]											
Trails											-
Tower Recon - Hamel Rd-Hunter to Pinto											Developer/Park Dedication Fund
Arrowhead Trail (without Land Acq)	$ 250,000	$ 250,000									Park Dedication Fund/Grants
General Landscaping - all parks	$ 7,000	$ 7,000	$ 7,000	$ 7,000	$ 7,000	$ 7,000	$ 7,000	$ 7,000	$ 7,000	$ 7,000	Park Dedication Fund
Small Equip/Improvements - all parks	$ 20,000	$ 20,000	$ 20,000	$ 20,000	$ 20,000	$ 20,000	$ 20,000	$ 20,000	$ 20,000	$ 20,000	Park Dedication Fund
Large Equipment											
Air Compressor (60% PW)											Park Dedication Fund
Pickup Truck 3/4 Ton (50% PW)	$ 30,000	$ 15,000									Park Dedication Fund
Brush Hog (50% PW)	$ 5,000	$ 5,000									Park Dedication Fund
Hamel Legion Park											-
Hawks Field/Parking Lot clean-up	$ 75,000	$ 75,000									Park Dedication Fund
Dugout Covers	$ 25,000	$ 25,000									Park Dedication/Grants/Donations
											Grants/Donations
											Park Dedication/Grants/Donations
Snow Machine	$ 10,000	$ 10,000									Park Dedication/Grants/Donations
Trail Lights											Park Dedication/Grants/Donations
Holy Name Park											-
Picnic Shelter											Park Dedication Fund
Hunter Lions Park											Park Dedication Fund
											Park Dedication Fund/Donations
Playground Mats ~~and Wood Chips~~											Park Dedication Fund
Fence Rail Covers	$ 1,000	$ 1,000									
New Picnic Tables	$ 4,000	$ 4,000									Park Dedication Fund
Lakeshore Park											-
Add Playground Features	$ 5,000	$ 5,000									Park Dedication Fund
Picnic tables and concrete pads											Park Dedication Fund
Horseshoe pits											Park Dedication Fund
Stone steps to boat launch											
Rainwater Nature Area											Park Dedication Fund
Bridge by New Trail	$ 75,000	$ 75,000									Park Dedication Fund
Maple Park											-
Soccer Nets	$ 5,000	$ 5,000									Park Dedication Fund
Pavillion	$ 20,000	$ 20,000									Park Dedication Fund
Medina Morningside Park											
Fix Curbing around playground											Revolving Cap. Impr. Fund
Land Acquisitions / New Trails	$ 250,000	$ 250,000	$ 250,000	$ 250,000	$ 250,000	$ 250,000	$ 250,000	$ 250,000	$ 250,000	$ 250,000	Park Dedication Fund/Grants
Tomann Preserve - Park Development			$ 20,000	$ 20,000							Park Dedication Fund
The Park at Fields of Medina											Park Dedication Fund
Park Land by Medina Golf & CC											Park Dedication Fund
											Park Dedication Fund
Parks Sub-total	$ 782,000	$ 767,000	$ 297,000	$ 297,000	$ 277,000	$ 277,000	$ 277,000	$ 277,000	$ 277,000	$ 277,000	
TOTAL:	$ 1,794,857	$ 1,543,554	$ 4,944,730	$ 1,731,486	$ 6,572,924	$ 5,271,282	$ 740,600	$ 667,298	$ 277,000	$ 277,000	

Appendix 5

Emergency Telephone List

City of Medina's
Emergency Telephone List

Emergency Response Team	Name	Work Telephone	Alternate Telephone
Emergency Response Lead	Steve Scherer	763-473-8842	
Alternate Emergency Response Lead	Edgar Belland	763-473-9209	952-258-5321
Water Operator	Greg Leuer	612-282-4316	
Alternate Water Operator	n/a	n/a	

State and Local Emergency Response Contacts	Name	Work Telephone	Alternate Telephone
State Incident Duty Officer	Minnesota Duty Officer	800-422-0798 Out State	651-649-5451 Metro
County Emergency Director	Carver County Sheriff's Office	952-361-1231	952-361-1212
National Guard	Minnesota Duty Officer	800-422-0798 Out State	651-649-5451 Metro
Mayor/Board Chair	Bob Mitchell	763-473-1042	
Fire Chief – Hamel	Jeff Ruchti	612-719-6999	
Fire Chief – Long Lake	James Van Eyll	952-473-9701	
Fire Chief – Loretto	Jeff Leuer	612-221-4963	
Fire Chief – Maple Plain	Dave Eisinger	763-479-0520	
Sheriff	Jim Olson	952-361-1231	952-361-1212
Police Chief	Edgar Belland	763-473-9209	952-258-5321
Ambulance		911	
Hospital	Abbott Northwestern	612-863-4000	
Doctor or Medical Facility	Northwest Family Physicians	763-504-6600	

State and Local Agencies	Name	Work Telephone	Alternate Telephone
MDH District Engineer	Lucas Martin	651-201-4144	
MDH	Drinking Water Protection	651-201-4700	
State Testing Laboratory	Minnesota Duty Officer	800-422-0798 Out State	651-649-5451 Metro
MPCA	MPCA	651-296-6300	
DNR Area Hydrologist	Kate Drewry	651-259-5753	
County Water Planner	Joe Settles	612-348-6157	

Utilities	Name	Work Telephone	Alternate Telephone
Electric Company	W/H Electric	763-477-3000	763-477-3100
Electric Company	Xcel Energy	800-641-4400	800-895-1999
Gas Company	Centerpoint	612-372-4900	
Telephone Company	Frontier	1-800-921-8101	
Gopher State One Call	Utility Locations	800-252-1166	651-454-0002
Highway Department	MnDOT 24 Hr Line	651-582-1550	

Mutual Aid Agreements	Name	Work Telephone	Alternate Telephone
Neighboring Water System	Larry Ende (Independence)	952-215-8154	763-286-7286
Emergency Water Connection	Scott Oberaigner (Orono)	612-290-9791	763-494-5516

Technical/Contracted Services/Supplies	Name	Work Telephone	Alternate Telephone
MRWA Technical Services	MN Rural Water Association	800-367-6792	
Well Driller/Repair	Bergerson Caswell	Tim: 763-479-3121	612-369-3652
Pump Repair	Tri-State	Bruce : 612-209-3976	Ken: 320-558-2000
Electrician	All-Star Electric	John: 952-292-0916	
Plumber	Connelly	651-433-5203	651-247-0299
Backhoe	Doboszenski & Sons	763-478-6945	
Chemical Feed	DPC – Dave Schindeldecker	651-437-1820	612-839-0987

Generator	Nelson's Electric Motor Repair	320-296-1084	320-543-3280
Leak Detection	Water Conservation Inc	612-600-8716	
Pipe & Fittings	Burschville Construction	763-497-4242	Jim Schendell: 763-274-4310
Water Storage	Automatic Systems	Bruce : 612-817-2484	Jerry : 612-209-1534
Laboratory	MCES	651-602-4511	651-686-6674
Engineering firm	WSB & Associates	Jim Stremel: 763-287-8	Greg Johnson: 651-286-8466

Communications	Name	Work Telephone	Alternate Telephone
Radio Station	MPR	651-290-1500	
School Superintendent	Chace Anderson (Wayzata)	763-745-5002	

Appendix 6

Cooperative Agreements for Emergency Services

WATER SERVICE AGREEMENT

THIS AGREEMENT is made and entered into as of the 8 day of August, 2005 by and between the city of Medina, a Minnesota municipal corporation ("Medina") and the city of Maple Plain, a Minnesota municipal corporation ("Maple Plain").

BACKGROUND

1. Medina and Maple Plain are each authorized by law to construct, operate and maintain municipal water utilities for the purpose of supplying water within their respective corporate limits.

2. ~~The~~ Medina has approved the plat of the Park Ridge Acres, a residential subdivision including 23 single family lots ("Park Ridge Acres").

3. Medina is in the process of constructing public streets, water and sewer lines and storm water utilities for Park Ridge Acres.

4. After construction of the utilities is complete, Park Ridge Acres will be in need of sanitary sewer and water service.

5. Sanitary sewer service for Park Ridge Acres will be supplied by Medina.

6. Medina has requested that Maple Plain supply the water service to Park Ridge Acres.

7. Maple Plain has agreed to supply the water service to Park Ridge Acres, pursuant to the following conditions.

RECITALS

NOW THEREFORE, in consideration of the mutual covenants hereinafter contained, the parties hereto do stipulate and agree as follows:

1. Construction of the Water Service Improvements. Water service to Park Ridge Acres shall be supplied from an existing Maple Plain water main located south of the railroad overpass on Townline Road (the "Connection Point"). Medina shall construct any necessary improvements to extend water service from the Connection Point to Park Ridge Acres. Maple Plain shall be responsible for supplying the water service to Park Ridge Acres beginning at the time that the subdivision improvements are completed.

2. Water Connection Fees. Medina shall be responsible for collecting the current water connection fees from the lots in Park Ridge Acres. The amount of the fee shall be established by Maple Plain and may be a non-resident fee. The connection fees shall be collected by Medina for each property within Park Ridge Acres at the time of the issuance of the building permit for that lot. Medina shall remit to Maple Plain all water connection fees collected from Park Ridge Acres.

3. Water Meters. All water connections in Park Ridge Acres shall be metered. Medina shall be responsible for supplying and installing the meters and reading apparatuses in Park Ridge Acres. Medina shall read the meters for all connections in Park Ridge Acres on a quarterly basis. After each quarterly meter reading in Park Ridge Acres, Medina shall submit to Maple Plain information regarding the number of connections and the total amount of metered water consumed.

4. Water Charges. Medina shall charge Park Ridge Acres residents the current water rate for non-residents as established by Maple Plain plus an additional $5.00 for each connection each quarter. Medina shall be responsible for billing the residents and collecting the water charges from Park Ridge Acres. Medina shall cooperate with Maple Plain in administering any assessments or and fees needed to be collected for water service in Park Ridge Acres. Upon receipt of the water charges or any other assessments or fees, Medina shall remit all amounts collected to Maple Plain.

5. Hydrants. Medina agrees that it will prohibit and have strict penalties for any commercial use of water from any hydrant located in Park Ridge Acres. Medina shall be responsible for all hydrant flushing in Park Ridge Acres. Prior to performing any hydrant flushing in Park Ridge Acres, Medina shall coordinate with and obtain authorization from the Maple Plain public works department.

6. Water Use Restrictions. In the event that water use restrictions are declared by Maple Plain and notice thereof sent to Medina, Medina shall cooperate with Maple Plain in the establishment and enforcement of the restrictions needed, including, but not limited to, a sprinkling ban.

7. Information. Maple Plain shall be responsible for providing to Medina current consumers' confidence reports and any other notifications or advisories with respect to the water service in Park Ridge Acres. Medina shall be responsible for distributing this information to Park Ridge Acres residents.

8. Repair and Maintenance. The water main, valves and hydrants located beyond the Connection Point shall be the property and responsibility of Medina. Maple Plain shall be responsible for repair and maintenance of the interconnection, the valve and its lines. Medina shall be responsible for the repair and maintenance of the improvements beyond the Connection Point. Each city, except in the case of emergency repair or maintenance, shall give the other city 24 hours advance notice of any repair or maintenance activity of the water service improvements that affect Park Ridge Acres. The city performing the repair or maintenance activity shall be responsible for the restoration and costs of restoration of property or improvements that are disrupted as a result of such activities.

9. Indemnification. Maple Plain agrees to indemnify, defend and save harmless Medina, its officials, agents and employees from any claims or causes of action, of whatever nature, occasioned by or arising out of Maple Plain's repair, maintenance and operation of the water service to Park Ridge Acres. Medina agrees to indemnify, defend and save harmless Maple Plain, its officials, agents and employees from any claim or cause of action, of whatever nature occasioned by or arising out of Medina's repair or maintenance of the water service improvements to Park Ridge

Acres. Such undertakings shall not extend to acts that are the result of the intentional or negligent conduct of the other party, nor shall such undertakings be deemed to waive any limitation of liability available to either party.

10. Notices. Any notice or correspondence to be given under this Agreement shall be deemed to be given if delivered personally or mailed postage prepaid, certified mail, return receipt requested:

a) as to Maple Plain: City of Maple Plain
1620 Maple Avenue
Maple Plain, MN 55359-0097
ATTN: Clerk-Treasurer

b) as to Medina: City of Medina
2052 County Road 24
Medina, MN 55340
ATTN: City Administrator

or at such other address as either party may from time to time notify the other in writing in accordance with this paragraph.

11. Severability. In the event that any provision of this Agreement shall be held invalid, illegal or unenforceable by any court of competent jurisdiction, such holding shall pertain only to such section and shall not invalidate or render unenforceable any other provision of this Agreement.

12. Termination of Agreement. Either party may terminate this Agreement upon delivering a notice of cancellation to the other party at least five years prior to the termination date.

IN WITNESS WHEREOF, and pursuant to authorization of their respective city councils, the cities of Medina and Maple Plain have entered into this Agreement as of the day and year first above written.

CITY OF MEDINA

By _____
Bruce D. Workman, Mayor

By _____
Chad M. Adams,
Administrator-Clerk

STATE OF MINNESOTA)
) ss
COUNTY OF Hennepin)

The foregoing instrument was acknowledged before me this 2nd day of September, 2005, by Bruce D. Workman and Chad M. Adams, the mayor and administrator-clerk, respectively, of the city of Medina, a Minnesota municipal corporation, on behalf of the municipal corporation.

_____
Notary Public

LAURA L. SULANDER
NOTARY PUBLIC - MINNESOTA
My Commission Expires Jan. 31, 2010

CITY OF MAPLE PLAIN

By _____
John Sweeney, Mayor

By _____
Beverly Anderson,
Clerk-Treasurer

STATE OF MINNESOTA)
) ss
COUNTY OF Hennepin)

The foregoing instrument was acknowledged before me this 29 day of August, 2005, by John Sweeney and Beverly Anderson, the mayor and clerk-treasurer, respectively, of the city of Maple Plain, a Minnesota municipal corporation, on behalf of the municipal corporation.

_____
Notary Public

TRUDY L. LEHMEYER
NOTARY PUBLIC - MINNESOTA
My Commission Expires Jan. 31, 2009

WATER SERVICE AGREEMENT

THIS AGREEMENT is made and entered into as of the 11th day of February, 2008, by and between the city of Medina, a Minnesota municipal corporation ("Medina") and the city of Orono, a Minnesota municipal corporation ("Orono").

BACKGROUND

1. Medina and Orono are each authorized by law to construct, operate and maintain municipal water utilities for the purpose of supplying water within their respective corporate limits.

2. Medina has approved a subdivision ("Keller Estates") containing 21 single family residential lots located south of the Medina Morningside neighborhood and adjacent to Orono.

3. Medina has requested that Orono supply water service to Medina to enable Keller Estates to be served by the Medina municipal water system.

4. Orono has agreed to supply water service to Medina, pursuant to the following conditions.

RECITALS

NOW THEREFORE, in consideration of the mutual covenants hereinafter contained, the parties hereto do stipulate and agree as follows:

1. Construction of the Water Service Improvements. Water service to Medina will be supplied from an existing Orono water main located south of Keller Estates (the "Connection Point"). Medina has constructed or caused to be constructed the necessary improvements to extend water service from the Connection Point to Keller Estates. Orono shall be responsible for supplying the water to Medina to enable water service to Keller Estates when the connection is completed. Water may also be used by Medina on an emergency basis for water service to the Medina Morningside neighborhood.

2. Water Meters. All water connections in Keller Estates shall be metered. Medina shall be responsible for supplying, installing and maintaining the meters and reading apparatuses to ensure accurate metering of water usage. Medina shall read the meters for all connections in Keller Estates on a quarterly basis or such other periodic basis to which the parties may agree. After each meter reading, Medina shall submit to Orono information regarding the number of connections and the total amount of metered water consumed.

3. Water Charges. Medina shall be responsible for billing the users and collecting the water charges, including the collection of late fees, penalties, etc. Orono shall invoice Medina directly for the amount of water consumed, on a quarterly basis, or such other periodic basis to which the parties may agree, based on the water rate for non-residents as established by Orono. Upon receipt of the water charges, Medina shall remit those amounts to Orono. Orono reserves the

sole right and authority to establish the price of the water, and to change the rate on an annual basis as it deems necessary. As Medina will remit water charges to Orono independent of Medina's water fee collections, Medina shall retain all late fees, penalties, etc. it charges to the Keller Estates water users. If any assessments are established related to the Keller Estates water service, Medina shall be responsible for the collection of the assessments on the Keller Estates properties.

Subd. 1. Emergency Water Charges. Medina shall contact the Orono Public Works department, or applicable on-call public works person, upon providing emergency water services to Medina's Medina Morningside water system. Orono shall invoice Medina directly for the estimated gallons of water used, to be mutually determined by the responding Orono Public Works designee and responding Medina Public Works designee.

4. Hydrants and Water Charges. Medina shall be responsible for all hydrant flushing in Keller Estates. Prior to performing any hydrant flushing in Keller Estates, Medina shall coordinate with and obtain authorization from the Orono Public Works department. Medina will conduct hydrant flushing in Keller Estates in the amount of 11,900 gallons per flushing. Medina will conduct hydrant flushing once annually and Orono shall invoice Medina directly for the 11,900 gallons flushed based on the water rate for non-residents as established by Orono.

5. Water Use Restrictions. In the event that water use restrictions are declared by Orono and notice thereof sent to Medina, Medina agrees to abide by Orono's restrictions as they relate to the Keller Estates water users, and shall cooperate with Orono in the establishment and enforcement of the restrictions, including, but not limited to, a sprinkling ban.

6. Information. Orono shall be responsible for providing to Medina current consumers' confidence reports and any other notifications or advisories with respect to the water service to Keller Estates. Medina shall be responsible for distributing this information to water users in Keller Estates.

7. Repair and Maintenance. The water main, valves and hydrants located in Medina shall be the property and responsibility of Medina. Orono shall be responsible for repair and maintenance of the water main, valves, and hydrants located in Orono, including the interconnection. Medina shall be responsible for the repair and maintenance of the improvements in Medina. Each city, except in the case of emergency repair or maintenance, shall give the other city 24 hours advance notice of any repair or maintenance activity of the water service improvements that affect Keller Estates. The city performing the repair or maintenance activity shall be responsible for the restoration, and costs of restoration, of property or improvements that are disturbed as a result of such activities.

8. Indemnification. Orono agrees to indemnify, defend and save harmless Medina, its officials, agents and employees from any claims or causes of action, of whatever nature, occasioned by or arising out of Orono's repair, maintenance and operation of the water service to Medina. Medina agrees to indemnify, defend and save harmless Orono, its officials, agents and employees from any claim or cause of action, of whatever nature occasioned by or arising out of Medina's repair or maintenance of the water service improvements to Keller Estates. Such undertakings shall not extend to acts that are the result of the gross negligence or willful misconduct of the other party, nor shall such undertakings be deemed to waive any limitation of liability available to either party.

9. Notices. Any notice or correspondence to be given under this Agreement shall be deemed to be given if delivered personally or sent by United States mail, postage prepaid, certified mail, return receipt requested:

a)	as to Orono:	City of Orono P.O. Box 66 Orono, Minnesota 55323-0066 ATTN: City Administrator
b)	as to Medina:	City of Medina 2052 County Road 24 Medina, MN 55340 ATTN: City Administrator

or at such other address as either party may from time to time notify the other in writing in accordance with this paragraph.

10. Severability. In the event that any provision of this Agreement shall be held invalid, illegal or unenforceable by any court of competent jurisdiction, such holding shall pertain only to such section and shall not invalidate or render unenforceable any other provision of this Agreement.

11. Termination of Agreement. Either party may terminate this Agreement upon delivering a notice of cancellation to the other party at least five years prior to the termination date.

IN WITNESS WHEREOF, and pursuant to authorization of their respective city councils, the cities of Medina and Orono have entered into this Agreement as of the day and year first above written.

****

CITY OF MEDINA

By _____
Thomas M. Crosby, Jr. Mayor

By _____
Chad M. Adams,
City Administrator-Clerk

STATE OF MINNESOTA)
) ss
COUNTY OF Hennepin)

The foregoing instrument was acknowledged before me this 16th day of January, 2007, by Thomas M. Crosby, Jr. and Chad M. Adams, the mayor and city administrator-clerk, respectively, of the city of Medina, a Minnesota municipal corporation, on behalf of the municipal corporation.

_____
Notary Public

JODI MARIE WUNSCH
NOTARY PUBLIC - MINNESOTA
My Commission Expires Jan. 31, 2012

CITY OF ORONO

By James M. White
James M. White, Mayor

By Ronald Moorse
Ronald Moorse, City Administrator

STATE OF MINNESOTA)
) ss
COUNTY OF Hennepin)

The foregoing instrument was acknowledged before me this 11th day of February, 2007, by James M. White and Ronald Moorse, the mayor and city administrator, respectively, of the city of Orono, a Minnesota municipal corporation, on behalf of the municipal corporation.

Linda S. Vee
Notary Public

LINDA S. VEE
NOTARY PUBLIC - MINNESOTA
My Commission Expires Jan. 31, 2010

MUNICIPAL UTILITY SERVICE AGREEMENT

THIS AGREEMENT is entered into this 10th day of September, 2012, by and among the city of Medina, a Minnesota municipal corporation ("Medina") and the city of Orono, a Minnesota municipal corporation ("Orono").

WHEREAS, the Metropolitan Council Environmental Services division ("MCES") owns, operates and maintains the MCES Meter Station M431 located at 2445 West Industrial Boulevard which meters sanitary sewer service from portions of Medina and Orono; and

WHEREAS, Medina, and Orono have a history of inter-community utility service connections; and

WHEREAS, some of these inter-community utility service connections are governed by existing agreements, but there are also several inter-community utility service connections that do not have any governing agreements; and

WHEREAS, also as part of the Highway 12 Project, approximately 1,500 feet of new 12 inch diameter sanitary sewer was constructed upstream from the end of the new MCES interceptor sewer at Willow Drive then proceeding north on Willow Drive and then west along Industrial Boulevard to the new MCES Meter Station M431. This sanitary sewer between the Meter Station and the MCES interceptor is owned by MCES and conveys flows from Medina and Orono. The gravity sanitary sewer upstream from the MCES metering station is owned by Orono and conveys flows from Orono and Medina; and

WHEREAS, MCES owns and operates the new Meter Station M431 at the west end of Industrial Boulevard as shown on the map attached hereto as Exhibit B. This Meter Station measures flows from Medina and Orono before discharging into the MCES Industrial Boulevard interceptor sewer. The cities of Medina and Orono are charged by MCES for this flow; and

WHEREAS, the Medina flow into the Orono sanitary sewer on Old Crystal Bay Road is determined by the number of existing and maximum units from Medina that are referenced on exhibit A; and

WHEREAS, the existing agreement among the parties is listed below:

1. Sanitary Sewer Construction and Service Agreement among Long Lake, Medina and Orono dated August 10, 1981. This Agreement provides for trunk sanitary sewer system improvements to provide sanitary sewer service for the Morningside development in Medina through Orono and Long Lake in addition to sanitary sewer service for the Hackberry development in Orono through Long Lake; and

WHEREAS, Medina and Orono have decided to enter into this Agreement as a comprehensive municipal service agreement in order to include all of the exisiting and known future maximum

sanitary sewer connections. This Agreement shall supersede any existing agreements pertaining to this subject; and

WHEREAS, Exhibits A and B show the service areas and number of existing and maximum sanitary sewer connections for each pipe segment.

NOW THEREFORE, in consideration of the mutual promises contained in this Agreement, the parties agree as follows:

I. MUNICIPAL UTILITY SERVICE CONNECTIONS

1.01. Prior Agreements. This Agreement shall supersede any and all existing agreements between or among any of the parties pertaining to this subject. Medina and Orono agree to allow up to the maximum sanitary sewer connections as shown on the attached Exhibits A and B. The parties agree to provide sufficient capacity in their respective utility systems to accommodate both the existing and maximum sanitary sewer connections.

1.02. Approval of Future Connections. The parties agree that, owing to limited capacity in some areas of their respective sanitary sewer systems, any future sanitary sewer service connections above and beyond the maximum connections listed in this Agreement require prior approval of the respective parties that will be affected by any additional connections.

II. RATES & CHARGES

2.01. Existing Utility Interconnections. It is not the intent of this Agreement to change the billing methods for the existing utility interconnections.

2.02. Replacement of Utilities. In the event Pipe Segments A – D as shown on Exhibits A and B need to be repaired, maintained, or replaced the project costs shall be shared based on existing connections in the following manner:

Pipe Segment	Orono%	Medina%
A	0%	100%
B	59.8%	40.2%
C	66.9%	33.1%
D	83.1%	16.9%

Project costs shall be limited to only the work necessary to repair or replace the sanitary sewer but shall include all costs associated with the sanitary sewer repair or replacement including construction, engineering, legal, and any other costs necessary to complete the project. The Cities of Orono and Medina agree to provide a minimum of 2 years advance notice to the other City for any repair or replacement project for Pipe Segments A – D. Both Cities reserve the right to negotiate the cost sharing percentages noted above if the number of existing connections has changed since the date of this Agreement. In the event that an emergency repair is necessary the

City where the repair is necessary shall notify the other City within 24 hours of being made aware of the emergency. Costs for emergency repairs shall be shared based on the percentages shown above.

III. GENERAL PROVISIONS.

3.01. Term. This Agreement shall be in force and effect as of the date of execution by all of the parties. The parties may mutually agree to terminate this Agreement. Such termination must be in writing subscribed by authorized representatives of the parties and must describe the rights and obligations of the parties with respect to the interconnections at the time the termination is effective.

3.02. Liability; Insurance. With respect to the performance of services by and obligations of the parties as required by this Agreement, each party agrees that it shall be responsible for its own errors, acts, omissions and the results thereof to the extent authorized by law, and shall not be responsible for the acts of the other party or parties and the results thereof. The cities' and the councils' liabilities are governed by the provisions of Minnesota Statutes, Chapter 466. Nothing in this Agreement shall constitute a waiver by the parties or the councils of any statutory limits on or exceptions to liability.

3.03. Amendment. The terms of this Agreement may be changed by mutual agreement of the parties. Such changes shall be effective only on the execution of a written amendment signed by authorized representatives of the parties.

3.04. Notices. Any notice, request, or demand which may or must be given by a party under the terms of this Agreement or any statute or ordinance, shall be effective and deemed properly given two business days after it is deposited in the U.S. Mail or delivered in person to the other party addressed as follows:

City of Medina
2052 County Road 24
Medina, MN 55340-9790
Attn: City Administrator

City of Orono
P.O. Box 66
Orono, MN 55323-0066
Attn: City Administrator

3.05. Successors. The covenants and provisions of this Agreement shall be binding upon and inure to the benefit of the parties and their successors.

IN WITNESS WHEREOF, the parties have executed this Agreement as of the date first above written.

CITY OF ORONO

By: _____
Lili McMillan
Its: Mayor

By: _____
Jessica Loftus
Its: City Administrator

CITY OF MEDINA

By: _____
Tom Crosby
Its: Mayor

By: _____
Scott Johnson
Its: City Administrator

Exhibit A - Medina Existing and Total Maximum Sewer Units

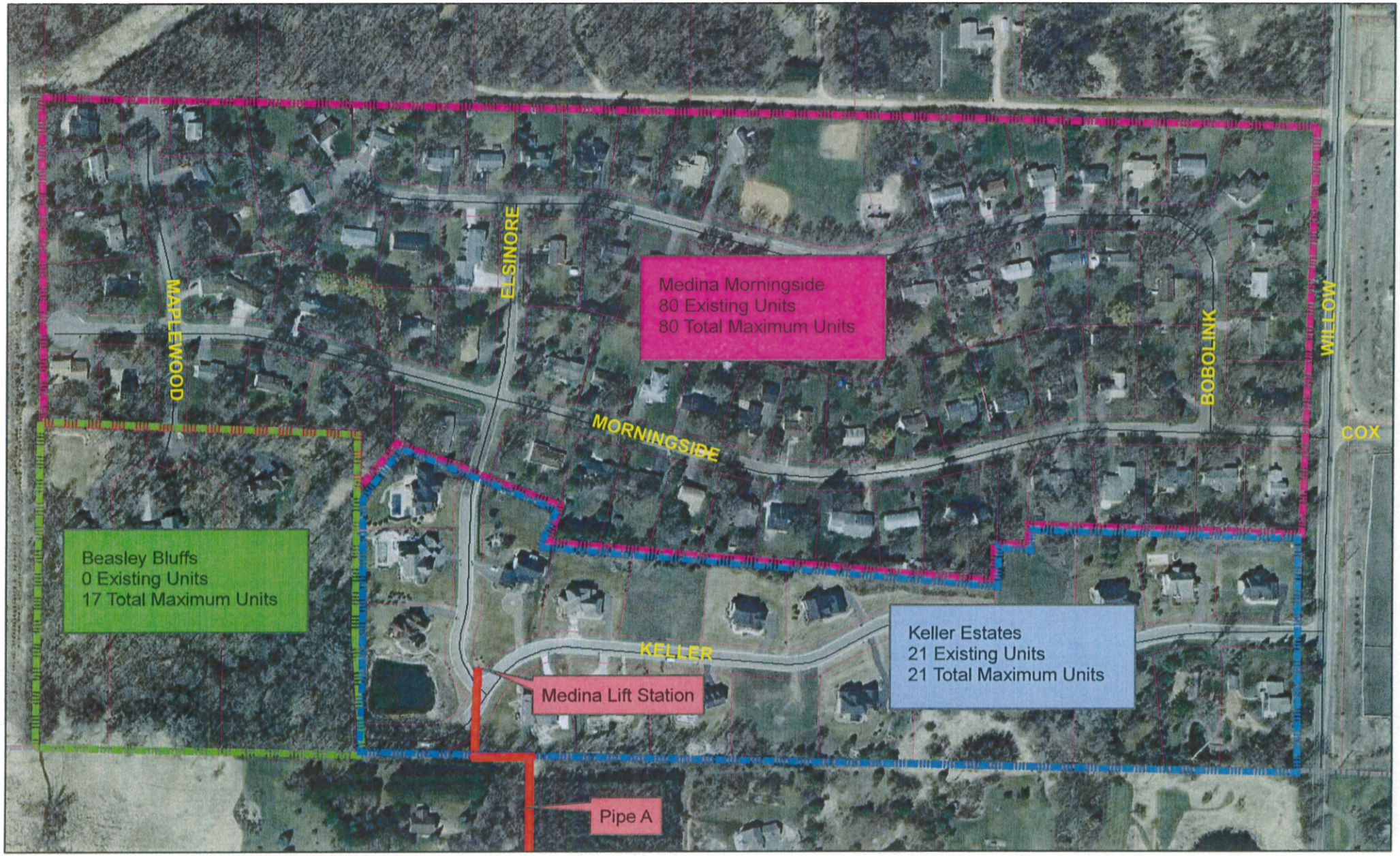

0 100 200 300 600 Feet

N W E S

Map Date: July 26, 2012

Exhibit B - Orono Existing & Total Maximum Sewer Units

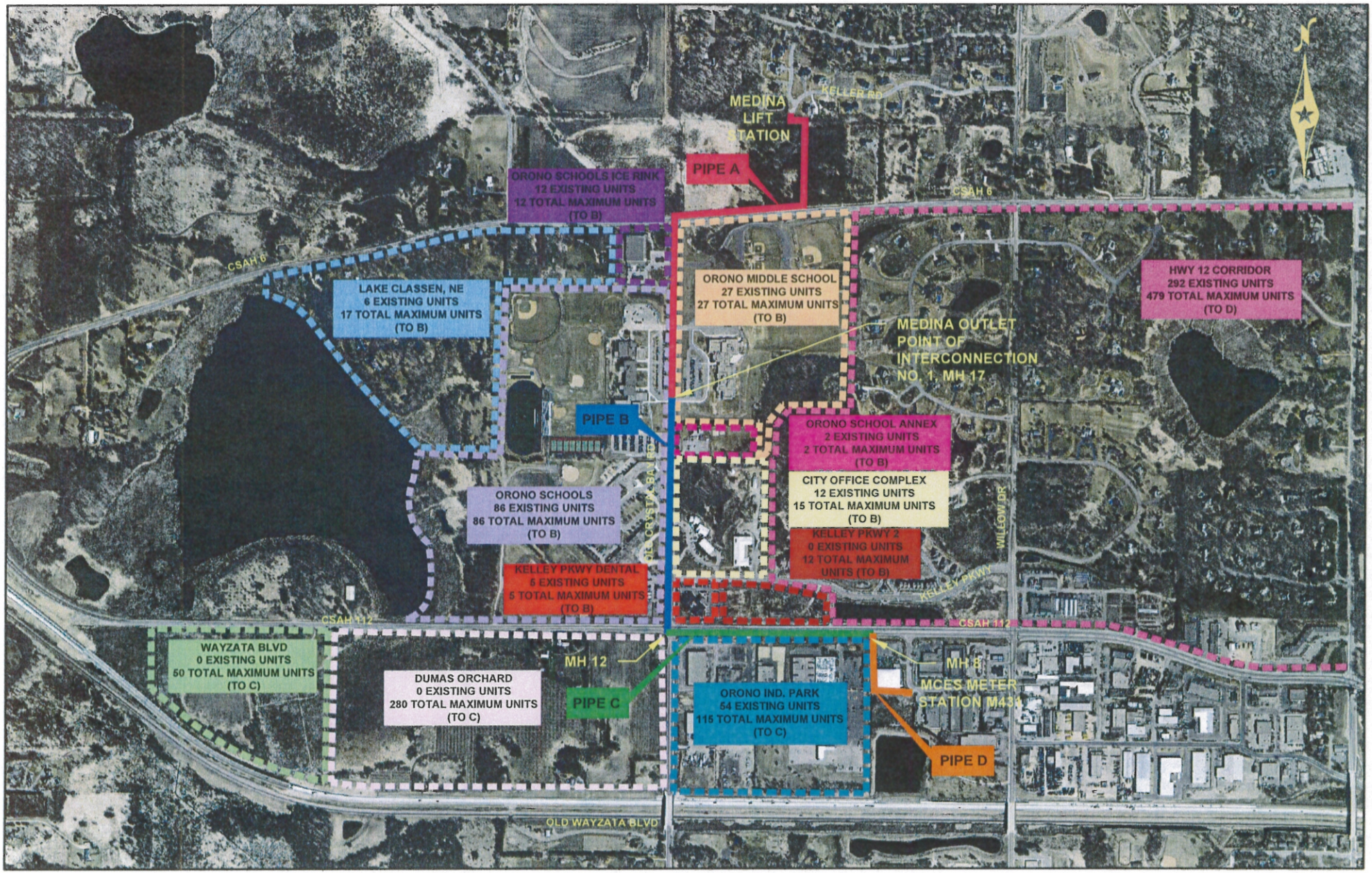

0 1000 2000

Scale Feet

Map Date : August 13, 2012

Appendix 7

Municipal Critical Water Deficiency Ordinance

CHAPTER 7.

PUBLIC AND PRIVATE UTILITIES

710. WATER SUPPLY SYSTEM

Section 710.01. Definitions. For the purposes of this section, the following terms shall have the meanings given to them:

Subd. 1. "Backflow Preventer" means any mechanical or air gap system designed and installed in order to prevent the accidental backflow of water from one source to another.

Subd 2. "City Water Supply System" means all Public Water Supply Wells, water towers, reservoirs, treatment plants, water mains, and service lines that the city owns, operates or maintains and all private water lines connected to any of the above.

Subd. 3. "Drinking Water Supply Management Area" means the surface and subsurface area surrounding a Public Water Supply Well, including the Wellhead Protection Area, which must be managed in accordance with the Wellhead Protection Plan.

Subd. 4. "Irrigation Well" means any well that is installed to provide water to supplement the water level of a Storm Water Pond which is utilized for a Lawn and Landscape Irrigation System.

Subd. 5. "Lawn and Landscape Irrigation System" means all pumps, lines or sprinkler heads which are located on private property or within the adjacent public right-of-way that have a sole purpose of irrigating landscape plants and/or grass.

Subd. 6. "Private Water Supply Well" means a Water Supply Well that is not owned, operated or managed by the City.

Subd. 7. "Public Water Supply Well" means a Water Supply Well owned, managed or operated by the City.

Subd. 8. "Seed Bed Preparation" means the preparation of top soil for any seeding, sodding or planting. A seed bed shall consist of a minimum of four inches of black top soil and two inches of humus or compost material.

Subd. 9. "Storm Water Pond" means any basin that is designed and constructed to treat storm water runoff from a particular area.

Subd. 10. "Water Supply Well" means a well that is not a dewatering well or monitoring well and includes wells used:

(a) for potable water supply;
(b) for irrigation;
(c) for agriculture, commercial or industrial water supply;

(d) for heating or cooling;
(e) as a remedial well; and
(f) for testing water yield for irrigation, commercial or industrial uses, residential supply or public water supply.

Subd. 11. "Wellhead Protection Area" means the surface and subsurface area surrounding a Public Water Supply Well as identified in the Well Protection Plan.

Subd. 12. "Wellhead Protection Plan" means the City plan, which has been approved by the Minnesota Department of Health, which provides for the protection of all Public Water Supply Wells.

Section 710.02. Private Water Supply Wells where City Water Supply System is Available.

Subd. 1. Purpose. The City Water Supply System represents a significant public investment and its operation in an efficient and sanitary manner is essential to protect public health, safety and welfare, to safeguard municipal finances and to support development within the community. It is the purpose of this ordinance to protect the integrity, financial stability, and adequacy of the City Water Supply System by restricting the installation of Private Water Supply Wells where the City Water Supply System is available and regulating the permitting of Private Water Supply Wells in locations where they pose a threat to City Water Supply Wells.

Subd. 2. Private Water Supply Wells Prohibited where City Water Supply System is Available.

(a) No Private Water Supply Well may be installed on any property where the City Water Supply System is available with the exception of the wells described in Subd. 2(b) of Section 710.02 below. For the purpose of this section, the City Water Supply System shall be considered available if the property is within the current or earlier time period of the Urban Services Phasing Plan of the City of Medina Comprehensive Plan.

(b) Exceptions.

(1) Irrigation Wells. Irrigation Wells may be installed to supplement water in storm water ponds which supply a Lawn and Landscape Irrigation System. Such Wells shall require prior written approval of the City. No Irrigation Well shall be permitted by the City within the Drinking Water Supply Management Area unless the applicant can demonstrate to the satisfaction of the City that the Irrigation Well will not have a negative effect on a City Water Supply Well, impact the City's ability to provide an adequate public water supply or otherwise compromise the City Water Supply System.

(2) Private Water Supply Wells used solely as part of a heating or cooling system for a building.

(3) Private Water Supply Wells on property zoned Rural Residential-Urban Reserve (RR-UR), Rural Business Holding (RBH), or Rural Commercial Holding (RCH) if the City determines that connecting to the City Water Supply System is not economically feasible based on the use proposed on the property.

Section 710.03. Connections with Water Mains Prohibited. No person, except employed or authorized by the City, shall tap any distributing main or pipe of the City Water Supply System, or insert stop-cocks or corporation-cocks therein.

Section 710.04. Permits for Service Connections.

Subd. 1. No connection or service tapping shall be made with a City water main without a permit which shall be issued by the City upon application by a licensed Master Plumber.

Subd. 2. No permit shall be issued for a connection or service tapping with the City water main to anyone except a licensed Master Plumber.

Subd. 3. Permits shall describe the location and size of each connection, and size must not be departed from in any degree, except on the written consent made on said permit by the officer giving the same.

Section 710.05. Supervision. No plumbing shall be done except under direct supervision of a Master Plumber when connecting with a public water system.

Section 710.07. Bonds and Insurance. Permits for building water systems and connections shall be taken out by a Master Plumber, who shall furnish a bond and insurance as required by Sections 700.31 and 700.33 of this Code.

Section 710.09. Permit Card. The City shall furnish a Permit Card with permit number which shall be prominently displayed on property where water connection is being made; said card shall be displayed for the duration of the work.

Section 710.11. Connection Fees. The fee for a permit for water main tapping shall be paid for each connection in the amount specified by Resolution of the City Council. In addition thereto, before any permit shall be issued, there shall be paid any sum required under Sections 710.13 and 710.15.

Section 710.13. Payment of Assessments. No permit shall be issued to tap or connect with any water main of the City of Medina either directly or indirectly from any lot or tract of land unless the City Administrator-Clerk shall have certified one of the following:

Subd. 1. That such lot or tract of land to be served by such connection or tap has been assessed for the cost of construction of the water main with which the connection is made;

Subd. 2. If no assessment has been levied for such construction cost, that proceedings for levying such assessment have been or will be commenced in due course;

Subd. 3. If no assessment has been levied, and no assessment proceedings will be completed in due course, that a sum equal to the portion of cost of constructing said water main which would be assessable against said lot or tract has been paid to the City.

Section 710.15. Payment Where No Assessment Has Been Made. If no such certificate can be

issued by the City Administrator-Clerk, no such permit to tap or connect to any water main shall be issued unless the applicant shall pay an additional connection fee which shall be equal to the portion of the cost of construction of the said main which would be assessable against said lot or tract to be served by such tapping or connection. Said assessable cost is to be determined by the City Engineer and City Assessor upon the same basis per front foot as any assessment previously levied against other property for the said main, or, if no such assessment has been levied, upon the basis of the uniform charge per front foot which may have been or which shall be charged for similar tapping or connection with said main, determined on the basis of the total assessable cost of said main allocated on a frontage basis.

Section 710.16. Excavation Permits Required. No person shall excavate in a public street to service a water main, make connection therewith, or for any purpose which will expose a water main, unless given permit to do so by the City.

Section 710.17. Permit Applications. Application for a permit shall be made in writing and signed by the owner or his agent duly authorized to do the work. The application must state clearly the kind of service for which the connection is intended, the size and kind of pipe to be used, the street and number, which side of street, if on a corner, on which street to be tapped, with a diagram of the property to be supplied, showing the streets, the boundary, the block on which it is situated, with the distance from the nearest corner, the full name and address of the owner, the purpose for which the water is to be used, the time when the corporation-cock is to be inserted; and the application shall show all other particulars necessary to the full understanding of the subject. No permit shall authorize anything not stated in the application. For any misrepresentation in such application the permit may be suspended, and if the misrepresentation appears to be willful, the permit will be revoked.

Section 710.19. Corporation-Cock and Laying of Service Pipes. The corporation-cock inserted in the distributing pipe must be of the size specified in the permit order. Every service pipe must be laid sufficiently waiving to allow of not less than one foot of extra length, and in such manner as to prevent rupture by settlement. The service pipe must be placed not less than eight feet below the surface and in all cases so arranged as to prevent rupture from freezing.

Section 710.21. Stop Boxes. Service pipes must extend from the main to the inside of the building; or if not taken into a building then to the hydrant or other fixtures which it is intended to supply. A stop-cock accessible from the surface through a sleeve without digging in all cases must be placed outside in a box at the curb, and a shut-off or other stop-cock with waste, of the size and strength required, shall be placed close to the inside wall of the building, well protected from freezing. All stop boxes at the curb must be set in front of the building intended to be supplied at the back side of the perimeter drainage and utility easement of said lot. All stop boxes and cocks must conform to the specifications of the City of Medina.

Section 710.23. Pipe Sizes. The pipe sizes shall be as specified and directed by the City Engineer for the City of Medina.

Section 710.25. Time for Insertion. If from any cause the plumber laying the service pipe should fail to have the corporation-cock inserted at the time specified in his application, notice must be

given the City fixing another day on which he wishes the corporation-cock to be inserted. The notice must be given at least two days previous to the excavation for laying of the service pipe, and the corporation-cock must be inserted before 5 p.m. except in special cases, and then the work shall be done only upon a written order from the City.

Section 710.27. Turning on Water. No person shall turn on any water supply at the stop box without a permit from the City Public Works Director, and no such permit shall be given anyone but a licensed plumber. The City reserves the right to turn off any water supply if said number is not displayed after a written notice has been sent to the owner as appearing on its books.

Section 710.29. Supply from One Corporation-Cock. No more than one house or building shall be supplied from one corporation-cock.

Section 710.31. Repair of Leaks. In case of failure upon the part of any consumer or owner to repair any leak occurring upon her or his service pipe within 24 hours after verbal or written notice has been given upon the premises, the water will be shut off and will not be turned on until the leak is repaired. Upon notice to the Building Inspector and verification that the leak has been repaired, and payment of a fee set by resolution of the City Council, the water will be turned on.

Section 710.33. Water Meters.

Subd. 1. Domestic Water Meter. Every customer shall provide a place where a meter can be installed as approved by the City Public Works Director or the City Engineer, and a licensed plumber shall install and maintain the same. The City fee schedule shall determine the charge to be made to customers for purchase of a water meter, with size and type of meter to be determined by the City Public Works Director and/or the City Engineer. At the time application is made for a building permit for a home to be served by City water, the applicant shall pay for the meter.

Subd. 2. Irrigation Meter. In order to save on irrigation costs, a customer may apply for a permit to purchase from the City a one inch irrigation meter, which charge shall be determined by the City fee schedule.

Subd. 3. Temporary Water Meter. Except for extinguishment of fires or when authorized by special permit from the City Public Works Director (for temporary purposes only), no person shall use water from the Water Supply System of the City or permit water to be drawn therefrom, unless the water used be metered by passing through a meter and approved backflow preventer and the user pays a hookup fee according to the City's fee schedule. No unauthorized person shall connect, disconnect, take apart, or in any manner change, or cause to be changed, or interfere with any such meter or the action thereof.

Section 710.35. Usage and Testing Fees. If any meter becomes obstructed or out of order, the City may issue a work order for it to be repaired. If at any time the customer requests to have the meter tested for accuracy, the same shall be done by the City, with the fee determined by the City fee schedule and charged to the customer if the meter registers 90% or more accurate. All water meters

shall remain the property of the City and may be replaced at any time by the City, in the City's sole discretion.

Section 710.37. Meter Damage, Costs. Water meters may be repaired or replaced from time to time as is necessary to ensure accurate measuring of the flow of water. The cost of said repair or replacement shall be borne by the City except that whenever a meter has been damaged due to negligence on the part of persons other than the employees of the City, the owner, occupant, and user of the premises, or such other person desiring the use of the water, shall reimburse the City within 60 days and upon demand therefor, the water service and supply to said premises may be shut off or discontinued as determined to be in the best interest of the City.

Section 710.39. Old Corporation-Cocks Plugged, Penalty. When new buildings are erected on the sites of old ones, and it is desired to increase or change the old water service, no connections with the mains shall be given until all the old corporation-cocks shall have been removed and the main plugged. If any contractor, workman or employee upon such building shall cause or allow any service pipe to be hammered together at the ends to stop the flow of water, or save expense in removing such pipe from the main, the owner of such building, such workman or contractor shall, upon conviction thereof, be guilty of a misdemeanor, and shall remove said service pipe from the main; if he shall fail to do so on 24 hours notice, he shall be obligated to pay the City the cost incurred by it for such removal.

Section 710.41. Meter Setting Devices. Meter setting devices for 3/4 inch and one inch meters shall be of copper pipe or tubing from the terminus of the service pipe up to and including the house side valve, provided that if copper cannot be obtained such meter setting device may be of another non-corrodible metal approved by the City.

Section 710.43. Excavation for Tapping Water Mains. Excavations made for the purpose of making a tap from any City water main shall be at least 2 and 1/2 feet wide by 4 feet long inside the curbing, said 4 feet to be measured from a point 6 inches beyond the side of the main opposite to that which is to be tapped and from said point toward the building with which said water connection is to be made. Such excavations shall extend to the depth of at least 12 inches lower than the bottom of the water main. Ample clear space shall be allowed around the main in all cases to insert the tapping machine. All excavations for tapping shall be safely curbed to the satisfaction of the City tapper. In case the excavation is not properly made, sufficient clear space is not provided, or the excavation improperly curbed, the tap shall not be made until the excavation, clear space and curbing are proper and safe. A safe ladder shall be furnished by the person doing the work for the use of the inspector for the purpose of inspecting the connection to the City main.

Section 710.45. Water Meter Installation. All water meters hereafter installed shall be in accordance with the following rules:

Subd. 1. The bottom of the meter shall not be less than four (4) inches, or more than twelve (12) inches from the top of the finished basement floor line; and the meter shall not be set more than twelve (12) inches measured horizontally, from the inside line of the basement wall.

Subd. 2. The service pipe from the City water main to the meter, where the same enters the building, shall be brought through the basement floor in a vertical position, so that a connection may be made thereto with an ell to which may be attached the stop and waste, and meter, or the pipe may be brought through the basement floor, in a vertical position and bent above the floor at a right angle; and the stop and waste, and meter attached in such a manner that the meter shall stand in a proper, vertical position. In no case shall there be more than twelve (12) inches of pipe exposed between the point of the entrance through the basement floor and the stop and waste, and said stop and waste shall be connected directly to the meter.

Subd. 3. The water pipe connecting with the City water main shall not be run under any basement floor for a distance of more than two (2) feet, measured from the inside line of the basement wall, before being connected with the water meter.

Section 710.47. Private Water Supplies. No water pipe of the City Water Supply System shall be connected with any pump, well or tank that is connected with any other source of water supply and when such are found, the City shall notify the owner to disconnect the same, and if not done immediately, the water supply shall be turned off forthwith.

Section 710.48. Cross-connection Control. Cross-connections between potable water systems and any system or equipment that contain, or are used to handle, water or other substances that may pose a risk to health or safety are prohibited, except where express written approval has been made by the City of Medina. Written approval may only be given where suitable protective devices, such as a break tank or a reduced pressure zone backflow preventer, are installed, tested, and maintained to ensure proper operation. Cross-connections between an individual water supply and a potable public supply shall not be made without express written permission from the City of Medina in accordance with the Minnesota Plumbing Code, Minnesota Rules Chapter 4715.

Section 710.49. Size of Connections. Connections with the mains for ordinary domestic supply shall be a minimum diameter of one inch.

Section 710.51. Connections Beyond City Boundaries. In any and all cases where water mains of the City have been or shall be extended to or constructed in any road, street, alley or public highway adjacent to or outside the corporate limits of the City, the City Public Works Director is hereby authorized to issue permits to the owners or occupants of properties adjacent to, or accessible to, such water mains to tap and make proper water service pipe connections with such water mains of the City in conformity with and subject to all the terms, conditions and provisions of the ordinances of the City relating to the tapping of the City water mains and making water service pipe connections therewith, and to furnish and supply water from the Water Supply System of the City to such owners and occupants of properties adjacent or accessible to such water mains of the City through and by means of water meters duly installed. Water service rendered to such persons shall be subject to all provisions of this Ordinance, and persons accepting such service shall thereby agree to be bound and obligated by said Ordinance. This provision regarding connections beyond the City boundaries shall not be effective until a contract regarding said connections is entered into by and between the City of

Medina and the City in which said connections are to be made, or a contract is made by and between an owner of land beyond the City boundaries where a connection is proposed to be made and the City in which said property is located is made a party to said contract.

Section 710.53. Fire Hydrant Connections. It shall be unlawful for any person, except when authorized by the City, or except members of the City Public Works Department or Volunteer Fire Department, when performing their official duties, to open or interfere with any of the hydrants of the City Water Supply System.

Section 710.55. Water Rates.

Subd. 1. The rate due and payable to the City by each water user within the City for water taken from the City Water Supply System shall be established in the City fee schedule.

Subd. 2. In case the meter is found to have stopped or to be operating in a faulty manner, the amount of water used will be estimated in accordance with the amount used previously.

Subd. 3. When water is desired for construction purposes, the owner shall make application for water service and the service shall be carried inside the foundation wall. If the meter cannot be installed at that time, the charges for the water shall be set forth under water rates, and when the building is completed, the meter shall be set in the regular way.

Section 710.57. Service Charges. Charges in an amount set by the City fee schedule shall be made and collected at the time of making application for the following connections to the Water System.

Subd. 1. For turning on water where service has been turned off for non-payment of water bill or failure to repair a leak;

Subd. 2. For raising or lowering, stop-box tops to correspond with ground level change made by property owner;

Subd. 3. For turning water on or off at the request of the property owner or tenant, or for any other reason.

Section 710.59. Utility Fund. There shall be maintained within the City accounting system separate funds, Sanitary Sewer and Water System. All monies collected by the City Administrator-Clerk for sewer and water service under this Ordinance shall be deposited in each respective fund. Such fund shall be used to meet all the expenses for the operation, maintenance, repair, plant expansion, and administration of each respective Sanitary Sewer and Water Project.

Section 710.61. Billing Procedures. All bills and notices for sewer and water service shall be sent to the property address of the real estate being served. Non-resident owners or agents shall receive a copy of such bills and notices upon written request.

Section 710.63. Collections and Delinquent Bills. Bills shall be delinquent if not paid in full on or before the last day of the month. A service charge in an amount set by the City fee schedule shall be incurred immediately upon such delinquency and shall be added to the next monthly billing. An

additional service charge shall be added on each monthly calculation date upon which said delinquent bill, including any previous service charge, remains unpaid. All bills, including service charges, which remain delinquent and unpaid on September 1 of each calendar year, shall be certified by the City Administrator-Clerk to the County Auditor on or before October 15th of said year for collection. Amounts so certified, together with interest at the rate set by resolution of the City Council, commencing on the date of initial delinquency, shall be extended by the County Auditor on the tax rolls and become a lien upon the property in the manner of special assessments, but shall be payable in a single installment, and shall be collected with real property taxes and returned to the City of Medina.

Section 710.65. Discontinuance of Service for Ordinance Violations. The City is authorized to shut off water service at any stop box connection at any time it finds any of the following, provided that water shall not be turned off from any service pipe between the hours of 9 a.m. on Saturday and 9 a.m. on the following Monday:

Subd. 1. The owner or occupant of the premises served, or any person working on any pipes or equipment thereon which are connected with the City water supply system has intentionally violated any of the requirements of the Ordinances of the City relative to the water supply system or connections therewith.

Subd. 2. The owner or occupant of the premises served threatens to violate, or cause to be violated, any of the provisions of this Code.

Subd. 3. Any charge for water, service, meter, meter parts or any other financial obligations imposed on the present or former owner or occupant of the premises served, by the provisions of this Code, is unpaid.

Subd. 4. Fraud or misrepresentation by the owner or occupant in connection with an application for service.

Section 710.67. Deficiency of Water and Shutting Off Water. The City shall not be liable for any deficiency or failure in the supply of water to consumers, whether occasioned by shutting the water off for the purpose of making repairs or connections, or from any other cause whatsoever. In case of fire, or alarm of fire, the City may shut off water to insure a supply for fire fighting; or in making repairs or constructing new works, the City may shut off the water at any time and keep it shut off so long as it shall deem necessary.

Section 710.68. Water Use Restriction. In the event of a water supply shortage, use of City water for lawn and garden sprinkling, irrigation, car washing or other non-potable uses shall be limited to an odd-even date schedule corresponding to property address, effective upon the Public Works Director or City Administrator's designee's determination that the shortage of water supply threatens the City Water Supply System. The Public Works Director or City Administrator's designee may further limit the days and hours of the City Water Supply System usage at any time as deemed necessary. Special permit allowance will be considered for those property owners with new seed, sod, or other needs if the Public Works Director determines sufficient water for such permits is available.

Section 710.69. Declared Water Shortage. If the City Council determines that an emergency is present, the Council may declare a water shortage and determine that the users of the public water mains shall be prohibited from using the water from the City Water Supply System for certain functions on their property. All persons within the City of Medina shall comply with regulations imposed as a result of a water shortage. Violation of this section shall be a misdemeanor.

Section 710.71. Access to Buildings. Authorized employees of the City shall have free access at reasonable hours of the day to all parts of every building and premises connected with the City Water Supply System for reading of meters and inspections.

Section 710.73. Adjustments in Water Charges. The City Council is hereby authorized to make adjustments in water charges where in its opinion the amount billed was erroneous due to meter deficiency or other mistake.

710.75. Lawn and Landscape Irrigation Systems.

Subd. 1. Purpose. The purpose of this ordinance is to promote efficient use of water for lawn and landscape irrigation without placing an undue burden on the City's public water supply.

Subd. 2. Reserved.

Subd. 3. Connection of Lawn and Landscape Irrigation Systems to the City Water Supply System.

(a) Customers installing an automatic or underground irrigation system are required to install a rain sensor device. Existing irrigation systems are required to retrofit to install a rain sensor device at such time as improvement or extension of the system occurs.

(b) If located within the City Water Supply System service area, the following are prohibited from connecting a Lawn and Landscape Irrigation System to the City Water Supply System:

i) A property located within a subdivision that consists of five or more lots and is zoned residential;

ii) A multiple dwelling unit structure of any size, except for properties in locations that are served by the city's storm sewer system; and

iii) A property that is over two acres in size and is zoned commercial, industrial business park, mixed-use, or public/semi-public.

(c) This ordinance shall be applicable only to the above-described properties that install Lawn and Landscape Irrigation Systems after the enactment of this ordinance. No property shall be allowed to expand its Lawn and Landscape Irrigation System from the City Water Supply System if a Storm Water Pond is available or

established to accommodate lawn and landscape irrigation service. Any property presently served by the City Water Supply System that is requesting to expand its Lawn and Landscaping Irrigation System shall be required to convert and connect its Lawn and Landscaping Irrigation System to a Storm Water Pond if such Storm Water Pond is available or must be established to accommodate lawn and irrigation service.

Subd. 4. Connection to Storm Water Ponds. Lawn and landscape irrigation water may be obtained for any property from a Storm Water Pond under the following conditions:

(a) All pumps associated with the Lawn and Landscape Irrigation System shall be free standing or located in a structure that is not connected to the City Water Supply System; and

(b) No water pumped for the Lawn and Landscape Irrigation System shall enter and no pump or irrigation system shall in any way be connected to any structure that is connected to the City Water Supply System.

Subd. 5. Connection of Irrigation Wells to Storm Water Ponds.

(a) An Irrigation Well may be installed on any property in order to provide additional water to a Storm Water Pond under the following conditions:

i) Any Irrigation Well shall be constructed according to Minnesota Statutes Chapter 103I and Minnesota Rules Chapter 4725 ("Minnesota Well Code");

ii) A Water Use (Appropriation) Permit must be obtained from the Minnesota Department of Natural Resources;

iii) Each Irrigation Well shall be equipped with either a water flow meter or a time meter;

iv) The property owner shall provide the City with a well log and yearly pumping records on the last day of each calendar year for each Irrigation Well located on the property;

v) The Irrigation Well shall be protected from accidental back flow of water with a Backflow Preventor that shall be approved in advance by the City; and

vi) Irrigation Well water shall not be used to provide flow to any water feature where the water then flows to waste.

(b) Irrigation Well water shall be used only for irrigation of landscaping. It shall not be used for any other use.

Subd. 6. Construction of a Lawn and Landscape Irrigation System. The location of lines and sprinkler heads for a Lawn and Landscape Irrigation System may be located within the City right-of-way or easement subject to the following conditions and prior

approval of the City:

(a) The owner of the Lawn and Landscape Irrigation System is responsible for any maintenance or repair of the Lawn and Landscape Irrigation System;

(b) The owner of the Lawn and Landscape Irrigation System signs a written agreement with the City in which the owner agrees to assume all liability and responsibility for damages to the Lawn and Landscape Irrigation System that is caused by City activities, including, but not limited to, snow removal;

(c) All Lawn and Landscape Irrigation System lines located within City right-of-way or easement shall have a location wire installed in accordance with the City's specifications;

(d) All Lawn and Landscape Irrigation System lines that cross city streets shall be encased in an oversized carrier pipe; and

(e) The owner of the Lawn and Landscape Irrigation System shall provide the City with an as-built plan of the irrigation system.

Subd. 7. Operation of Lawn and Landscape Irrigation Systems. The operation of a Lawn and Landscape Irrigation Systems shall be subject to the following restrictions:

(a) Turf and Landscape Irrigation Best Management Practices as set forth by the Irrigation Association for landscape irrigation systems shall be followed by the owner at all times;

(b) Prior to any seed, sod or landscaping being placed within the Lawn and Landscape Irrigation System area, there shall be proper Seed Bed Preparation by the owner; and

(c) Under weather conditions where the City places an irrigation ban or other restrictions on the use of any lawn or landscape irrigation that is connected to the City Water Supply System, the City may also prohibit or place limitations on the pumping from any Irrigation Well that is being utilized by a Lawn or Landscape Irrigation System.

Subd. 8. Penalties. Any person convicted of violating this ordinance shall be guilty of a misdemeanor and shall be subject to a maximum fine or maximum period of imprisonment, or both, as specified by Minnesota Statutes, Section 609.03.

Amendment History of this Section

April 4, 2006 (Ord. 402). *Added Subsection 710.75 regarding Lawn and Landscape Irrigation Systems.*

July 17, 2007 (Ord. 426). *Added Subsection 710.68 regarding water use restrictions and amending 710.75 regarding Lawn and Landscape Irrigation Systems. Changing text to reflect consistent language for the Water Supply System.*

May 15, 2012 (Ord. 527). *Amended Section 710.01 through 710.04 and Section 710.75, Subd. 2 regarding private wells on property served by the city water supply system.*

July 7, 2015 (Ord. 581). *Comprehensive revision of the public and private utilities to bring them up to date with current standards.*

Appendix 8

Graph showing annual per capita water demand
for each customer category during the last ten years

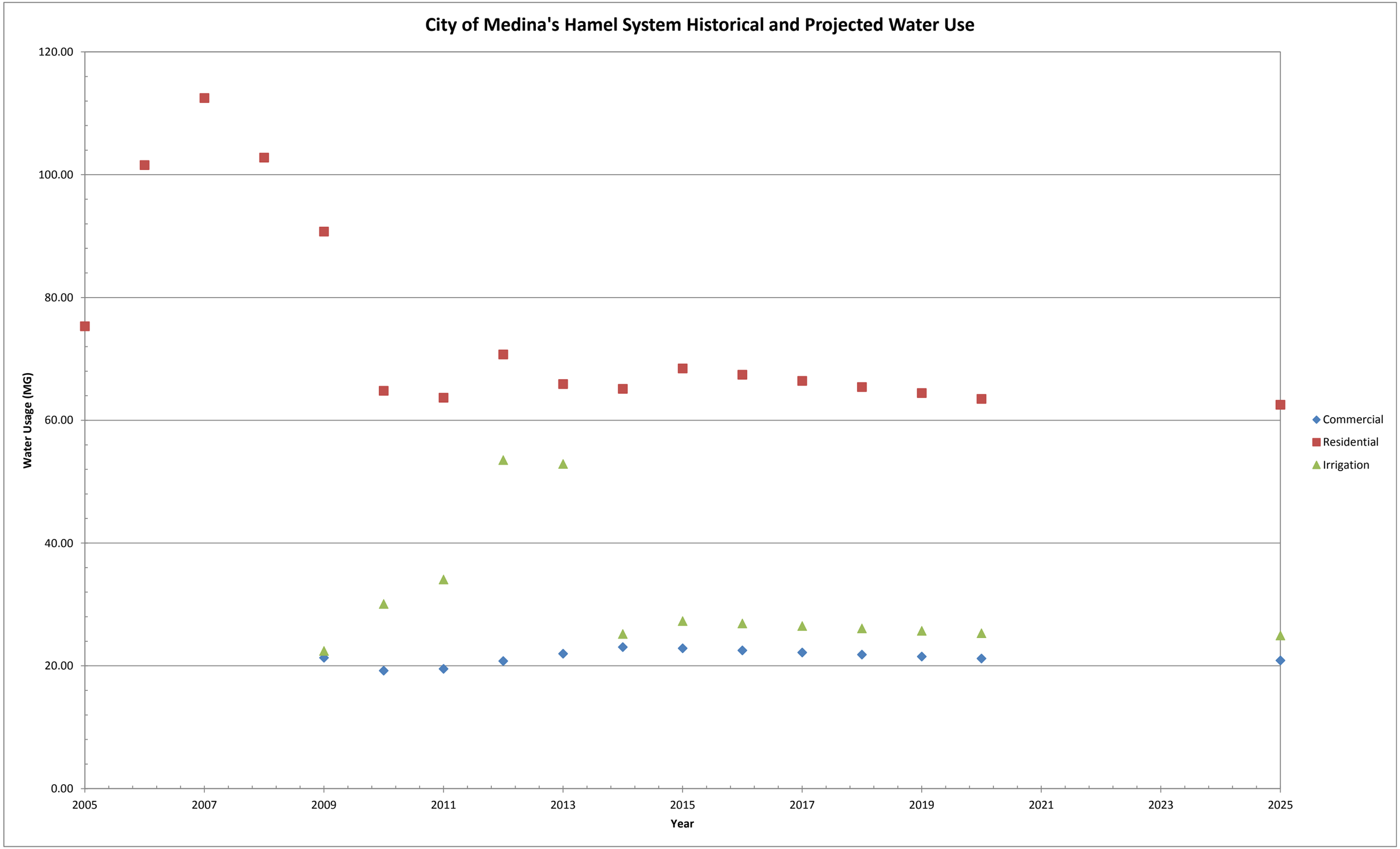
City of Medina's Hamel System Historical and Projected Water Use
Water Usage (MG)
120.00
100.00
80.00
60.00
40.00
20.00
0.00
2005
2007
2009
2011
2013
2015
2017
2019
2021
2023
2025
Year
Commercial
Residential
Irrigation

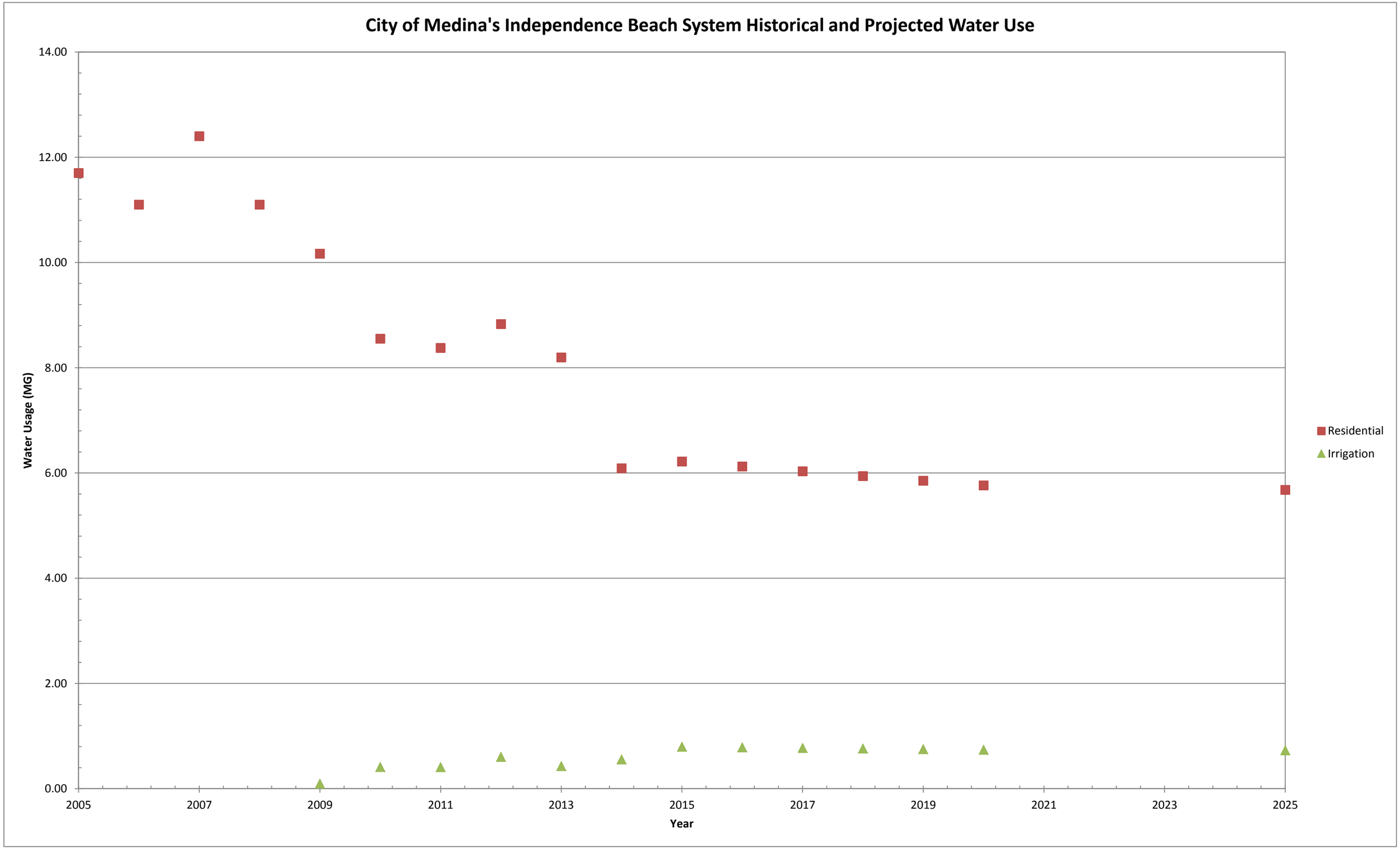
City of Medina's Independence Beach System Historical and Projected Water Use
14.00
12.00
10.00
8.00
6.00
4.00
2.00
0.00
Water Usage (MG)
2005
2007
2009
2011
2013
2015
2017
2019
2021
2023
2025
Year
Residential
Irrigation

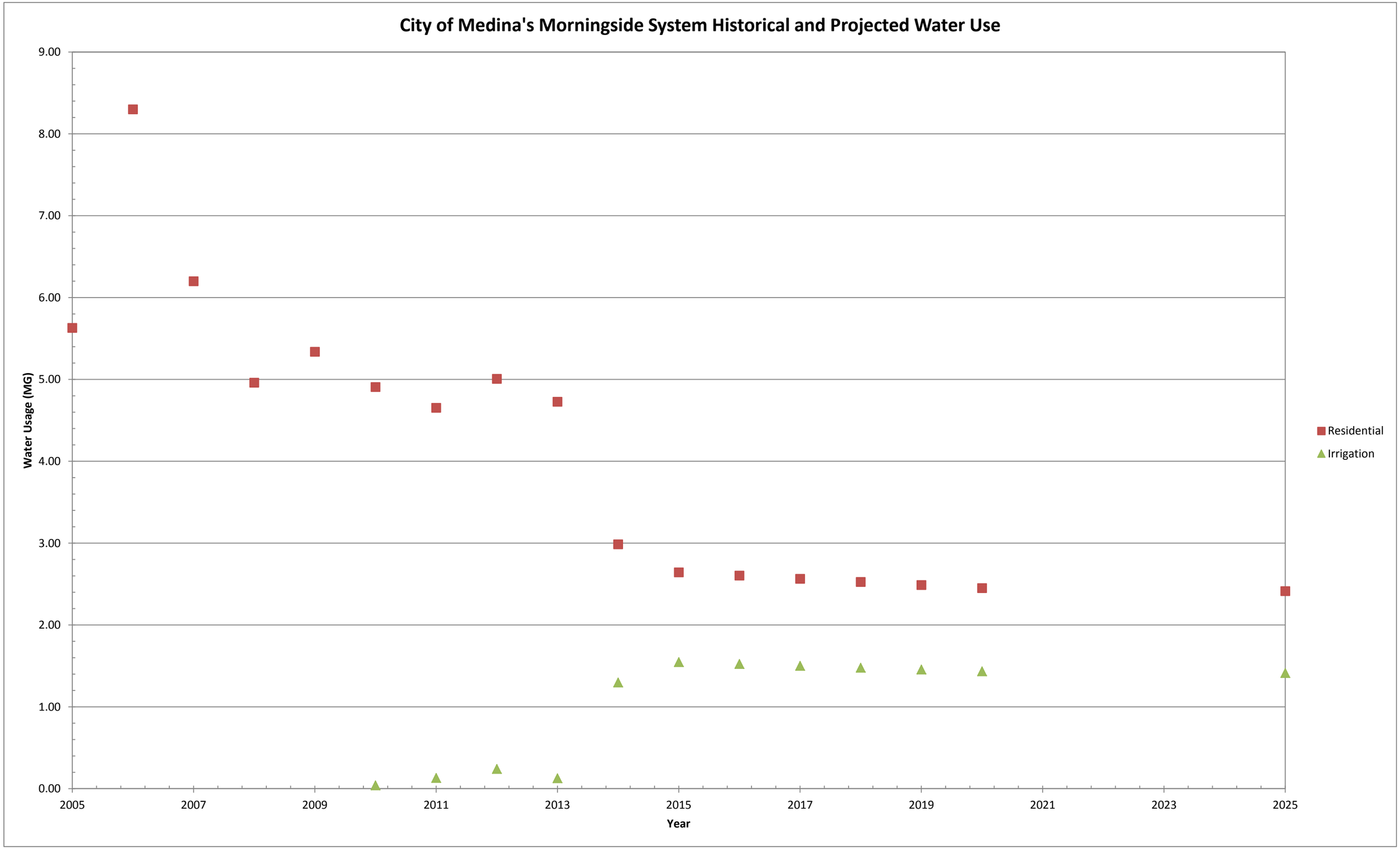
City of Medina's Morningside System Historical and Projected Water Use
Water Usage (MG)
9.00
8.00
7.00
6.00
5.00
4.00
3.00
2.00
1.00
0.00
2005
2007
2009
2011
2013
2015
2017
2019
2021
2023
2025
Year
Residential
Irrigation

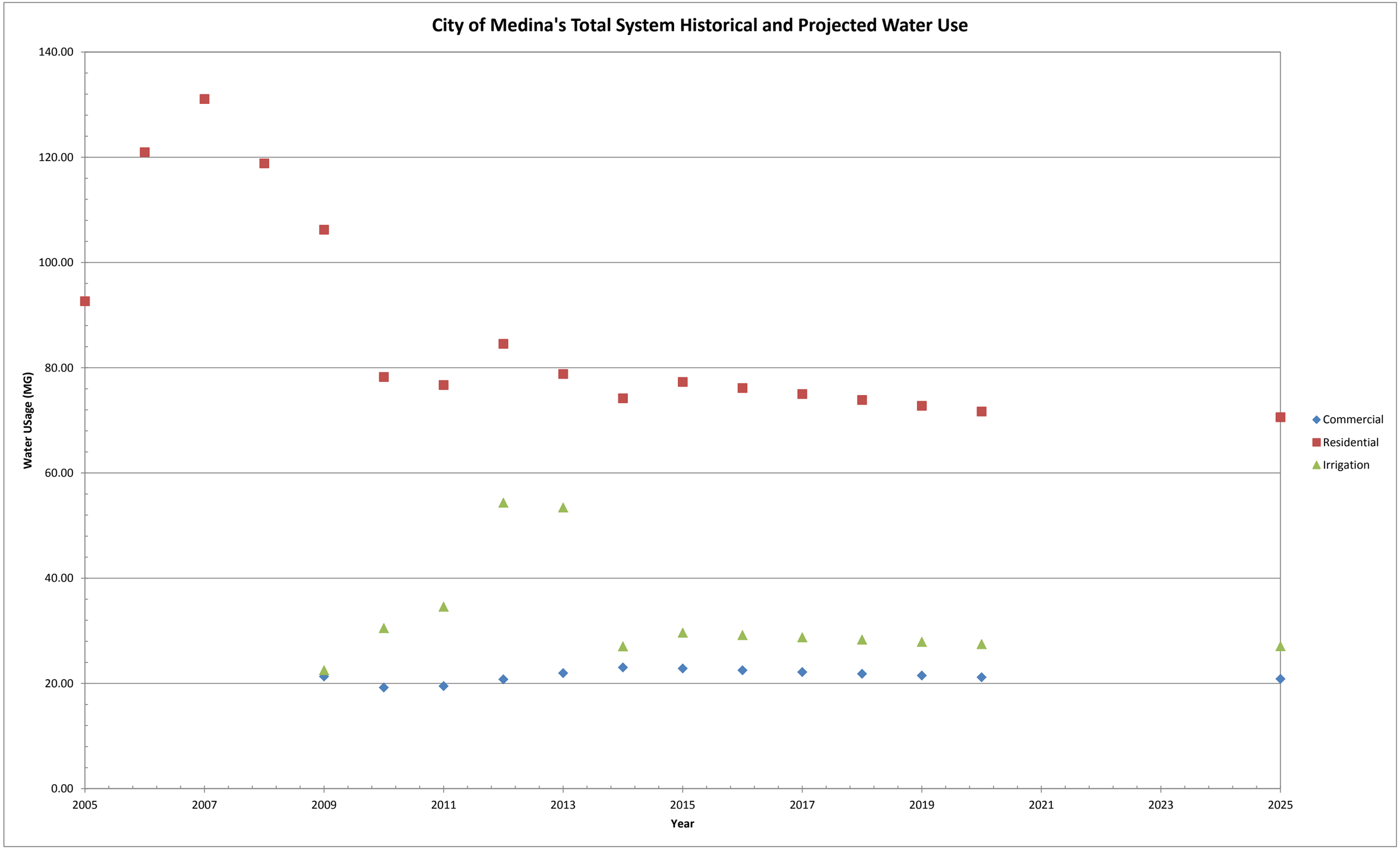
City of Medina's Total System Historical and Projected Water Use
Water USage (MG)
140.00
120.00
100.00
80.00
60.00
40.00
20.00
0.00
2005
2007
2009
2011
2013
2015
2017
2019
2021
2023
2025
Year
Commercial
Residential
Irrigation

Appendix 9

Water Rate Structure

Note: All fees are set by the Medina City Council in December of each year. These fees are published in the Crow River News. Visit our website at medinamn.us for our Fee Schedule.

If your account # begins with - 01	Water System: Hamel
If your account # begins with - 02 or 03	Morningside/Ind Beach
If you live in Keller Estates	Orono
If you live on Holy Name Drive	Plymouth sewer service
If you live on Spruce Road or Co Rd 29	Maple Plain

Sewer and Water Rates (MM=Medina Morningside, IB=Independence Beach) * All rates monthly Effective 1/1/2016

MM & IB Water (residential) (base charge)	$ 11.71	per month	Hamel Water (residential) (base charge)	$ 16.27	per month
MM & IB Water (residential) 1-4,000	$ 2.60	per 1,000 gallons	Hamel Water (residential) 1-4,000	$ 2.94	per 1,000 gallons
MM & IB Water (residential) 5,000-6,000	$ 2.94	per 1,000 gallons	Hamel Water (residential) 5,000-6,000	$ 3.58	per 1,000 gallons
MM & IB Water (residential) 7,000-10,000	$ 3.90	per 1,000 gallons	Hamel Water (residential) 7,000-10,000	$ 4.88	per 1,000 gallons
MM & IB Water (residential) 11,000-23,000	$ 4.22	per 1,000 gallons	Hamel Water (residential) 11,000-23,000	$ 5.75	per 1,000 gallons
MM & IB Water (residential) 24,000 and up	$ 5.21	per 1,000 gallons	Hamel Water (residential) 24,000 and up	$ 6.50	per 1,000 gallons
MM & IB Water (irrigation) 1-13,000	$ 4.22	per 1,000 gallons	Hamel Water (irrigation) 1-13,000	$ 5.87	per 1,000 gallons
MM & IB Water (irrigation) 14,000 and up	$ 5.21	per 1,000 gallons	Hamel Water (irrigation) 14,000 and up	$ 6.50	per 1,000 gallons
MM & IB Water (commercial) (base charge)	$ 11.71	per month	Hamel Water (commercial) (base charge)	$ 16.27	per month
MM & IB Water (commercial) 1-10,000	$ 3.90	per 1,000 gallons	Hamel Water (commercial) 1-10,000	$ 4.88	per 1,000 gallons
MM & IB Water (commercial) 11,000 and up	$ 5.21	per 1,000 gallons	Hamel Water (commercial) 11,000 and up	$ 6.50	per 1,000 gallons
			City of Orono Water Service (Keller Estates Only)	$ 12.78	base fee
Sewer (residential) minimum	$ 20.19	per month	0-10	$ 3.43	per 1,000 gallons
Sewer (residential)	$ 5.05	per 1,000 gallons	11-25	$ 4.30	per 1,000 gallons
Sewer (commercial) minimum	$ 20.19	per month	26+	$ 6.45	per 1,000 gallons
Sewer (commercial)	$ 5.05	per 1,000 gallons			
Sewer only (residential) (based on 6,000 gallons per month)	$ 30.29	per month			
			City of Maple Plain Water Service	$ 13.94	Commercial Base
				$ 10.62	Residential Base
			1-5	$ 7.84	per 1,000 gallons
			6-11	$ 8.24	per 1,000 gallons
City of Plymouth Sewer Service	$ 28.57	per month	12-23	$ 8.64	per 1,000 gallons
Note: Monthly charge is an estimate based on prior year's usage. Actual usage is adjusted for in the following year.			24+	$ 9.50	per 1,000 gallons

Storm Water Utility Fees Effective 1/1/16

Storm Water Utility Annual Fee	$ 28.57	per Residential Equivalency Factor (REF)
Storm Water Monthly	$ 2.38	Medina's SWU was created in 2008 to fund growing storm water management
Storm Water Appeal	$ 250.00	needs and mandates. All property owners must contribute to the fund.

Other Fees Effective 1/1/16

State of MN Water Connection Fee	$ 6.36	annually	This amount is collected for the State of Minnesota under Statute 144.383. Funds are used to ensure safe drinking water in all public water supplies.
Penalty for unpaid utility bills		10% per month	
Purchased services from other providers:		10% of charge imposed by seller	
Frozen/damaged meter repair	$ 100.00		
Water connect/disconnect/troubleshooting	$ 65.00	per trip	Note: meters may be tested at owners expense
Irrigation Meter/additional meter	$ 420.00		Note: other sizes are available
Returned payments (NSF)	$ 30.00		

Appendix 10

Adopted or proposed regulations
to reduce demand or improve water efficiency

Regulations adopted by the City of Medina to reduce demand and improve water efficiencies

- 2015 Minnesota Statues, 103G. 298 Landscape Irrigation Systems
    - https://www.revisor.mn.gov/statutes/?id=103g.298

- 2008 City Ordinance which bans new residential and commercial developments from utilizing City water supply for irrigation
    - See appendix 7

- Water Deficiency Ordinance for the City of Medina
    - See appendix 7

- Water efficient plumbing fixtures – Center Point Energy offers rebates
    - http://www.centerpointenergy.com/en-us/residential/save-energy-money/efficiency-programs-rebates/low-flow-showerheads-faucet-aerators?sa=mn

Appendix 11

Implementation Checklist:
Summary of all the actions that a community is doing or proposes to do, including estimated implementation dates

City of Medina
Implementation Spreadsheet

Action	Description	Timeframe				
		ongoing	annually	1-3 yrs	1-5 yrs	3-6 yrs
Review city ordinances/codes	To encourage or require water efficient landscaping.			✓		
Review city ordinance/codes	To permit water reuse options, especially for non-potable purposes like irrigation, groundwater recharge, and industrial use.		✓			
Review ordinances to limit irrigation	Review outdoor irrigation installations codes to require high efficiency systems (e.g. those with soil moisture sensors or programmable watering areas) in new installations or system replacements					✓
Make water system infrastructure improvements		✓				
Conduct audience-appropriate water conservation education and outreach		✓				
Conduct a facility water use audit	For both indoor and outdoor use, including system components		✓			
Install enhanced meters	Capable of automated readings to detect spikes in consumption	✓				
Install water conservation fixtures and appliances or change processes to conserve water	Toilets, facets, etc.	✓				
Repair leaking system components	(e.g., pipes, valves)	✓				
Investigate the reuse of reclaimed water	(e.g., stormwater, wastewater effluent, process wastewater, etc.)	✓				
Reduce outdoor water use	(e.g., turf replacement/reduction, rain gardens, rain barrels, smart irrigation, outdoor water use meters, etc.)	✓				
Train employees how to conserve water	Include for new employee training	✓				
Increasing block rates billing strategy	Rate structure for Residential, Commercial, Industrial, and Institutional customers	✓				
Consider participating in the GreenStep Cities Program	Voluntary program to aid cities in achieving their sustainability and quality-of-life goals	✓				
Rainfall sensors required on landscape irrigation systems	Conserve water and reduce utility bill when there is a sufficient moisture for landscape area.	✓				

Watering restriction requirements	Odd/Even day watering	✓				
Billing inserts or tips printed on the actual bill	Educational information supplied as billing insert	✓				
Consumer Confidence Reports	Report of City's water quality		✓			
Direct mailings (water audit/retrofit kits, showerheads, brochures)	City is looking into using direct mailings to further educate residents on the benefits of water conservation.	✓				
K-12 Education programs (Project Wet, Drinking Water Institute, presentations)	Making programs to educate school age children on water resources.		✓			
Sustainability Report			✓			

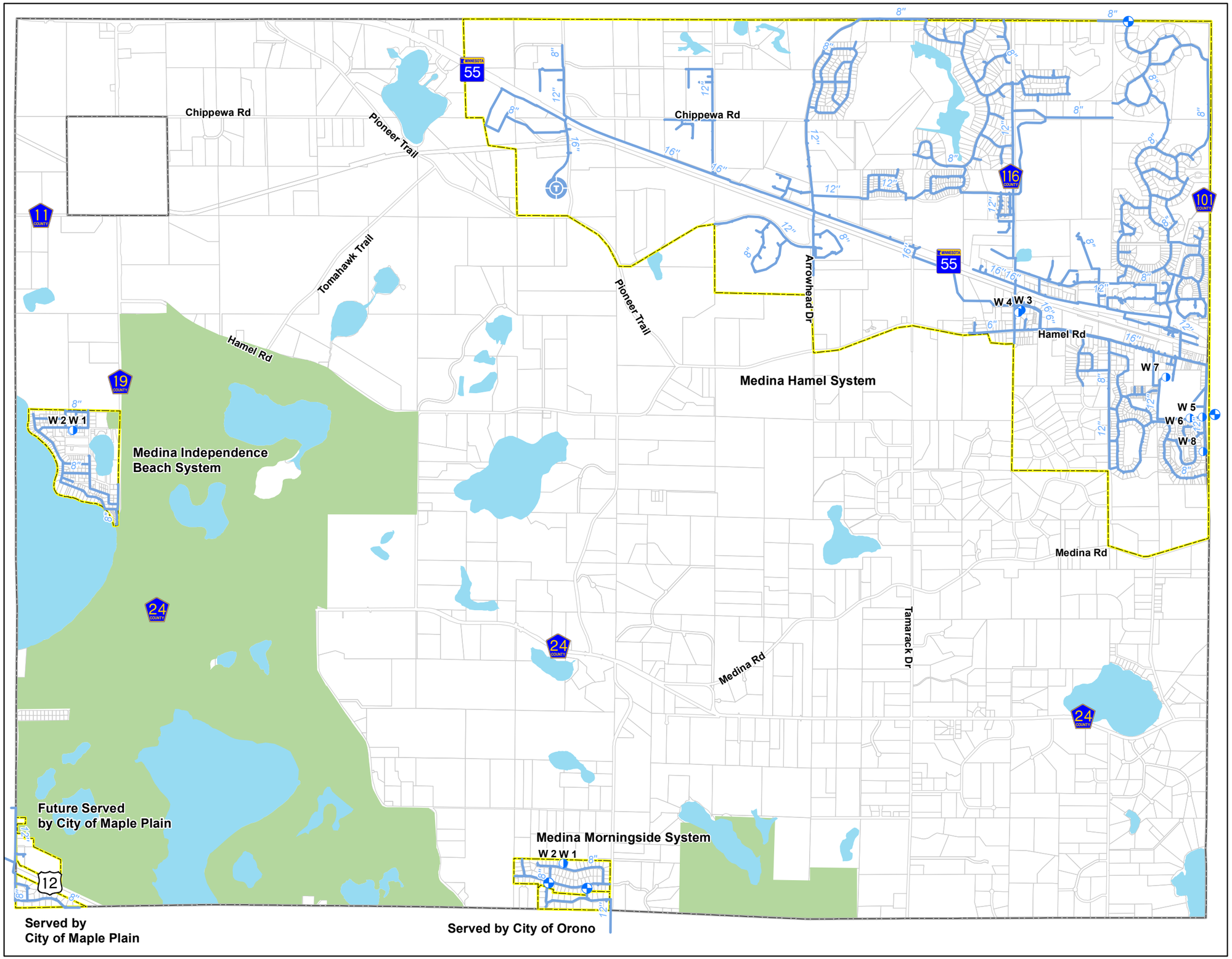

CITY OF MEDINA

Appendix 12 Existing Water Supply System

Comprehensive Water Supply Plan
City of Medina

Legend

- Existing Water Tower
- Existing Well
- Existing Interconnection
- Existing Watermain
- Water Service Areas

N

WSB

0 1,250 2,500 5,000 Feet

Document Path: K:\02712-530\GIS\Maps\Water Wastewater\ExistingWaterSupply.mxd

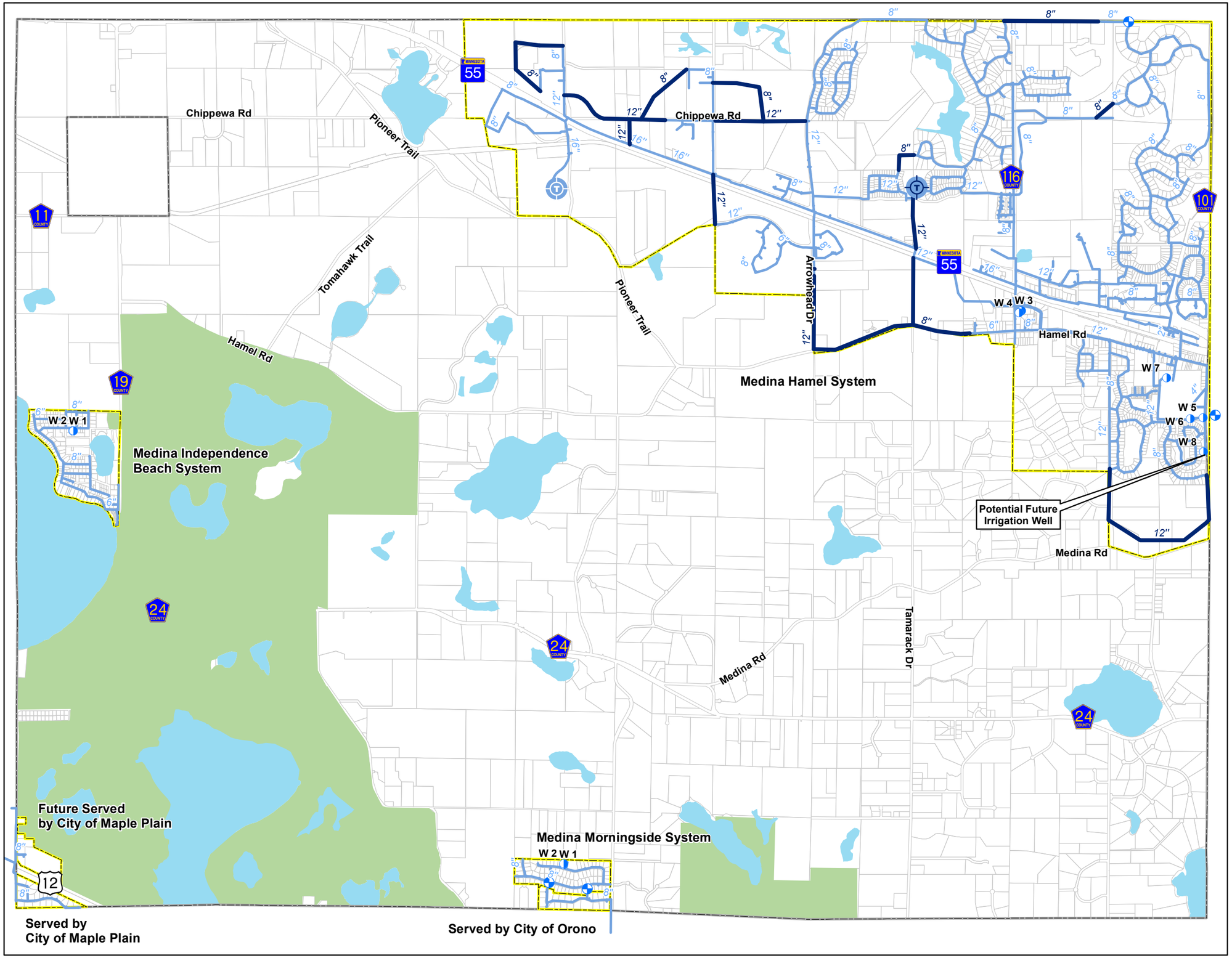

CITY OF MEDINA

Appendix 13
2040 Proposed Water Supply System

Comprehensive Water Supply Plan
City of Medina

Legend

- Proposed Water Tower
- Existing Water Tower
- Existing Well
- Existing Interconnection
- Proposed Watermain
- Existing Watermain
- Water Service Areas

N

WSB

0 1,250 2,500 5,000 Feet

Document Path: K:\02712-530\GIS\Maps\Water Wastewater\2040WaterSupply.mxd

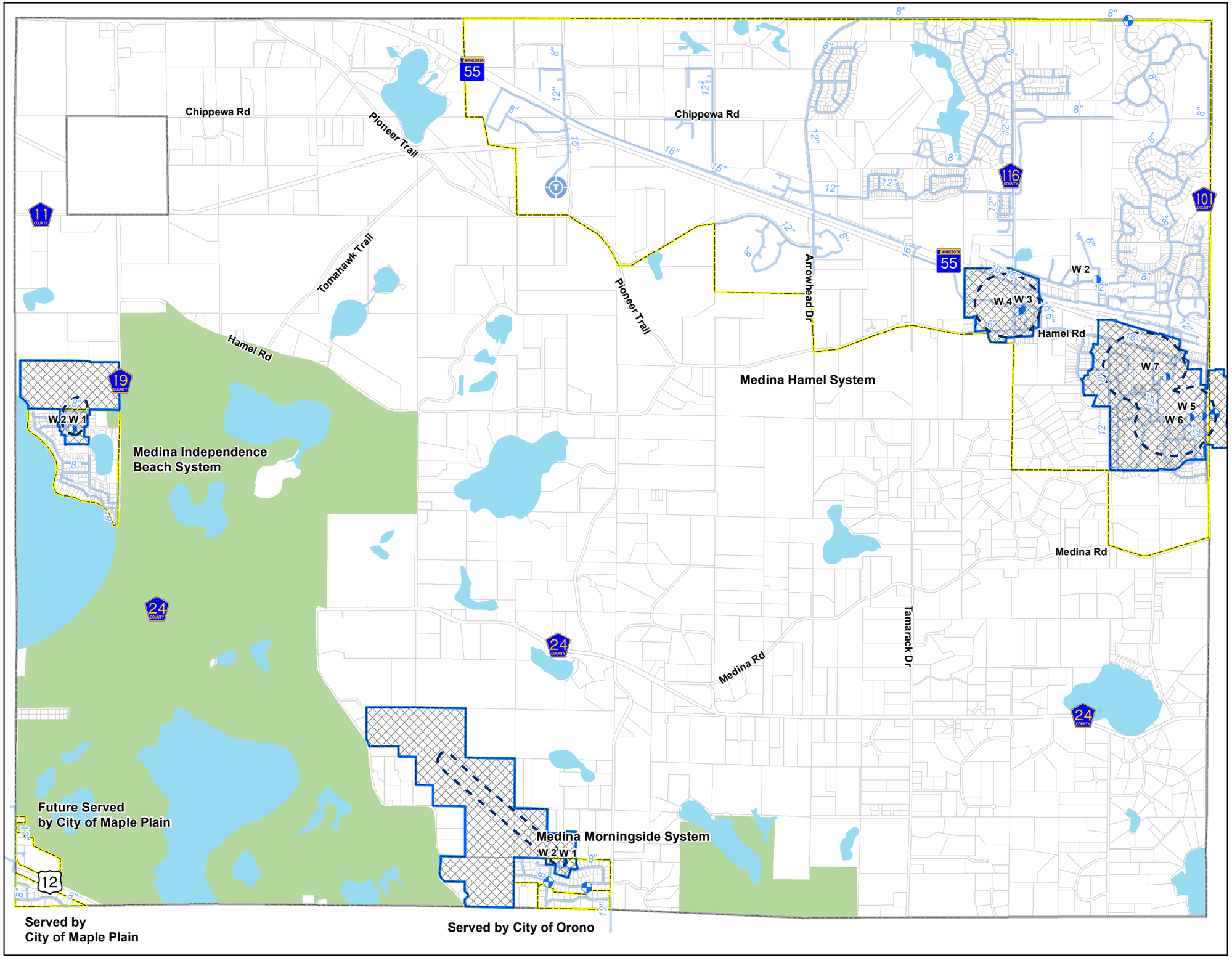

CITY OF MEDINA

Appendix 14
Drinking Water Supply Management Area (DWSMA)

Comprehensive Water Supply Plan
City of Medina

Legend

- Wellhead Protection Areas
- DWSMA
- Low Vulnerability
- Very Low Vulnerability
- Existing Water Tower
- Existing Well
- Existing Interconnection
- Existing Watermain
- Water Service Areas

N

WSB

0 1,250 2,500 5,000 Feet

Document Path: K:\02712-530\GIS\Maps\Water Wastewater\WaterSupply_DWSMA.mxd